Standards-based valves, to ISO 5599-1

★	Festo Core Range Solves the majority of your automation tasks	With the Festo Core Range, we have selected the most important products and functions from our broad product catalogue, and added the quickest delivery.
Worldwide:	Quickest delivery – wherever, whenever	The Core Range offers you the best value for your automation tasks.
Simply good:	Expected high Festo quality	
Fast:	Easy and fast to select	

Just look for the star!

Key features

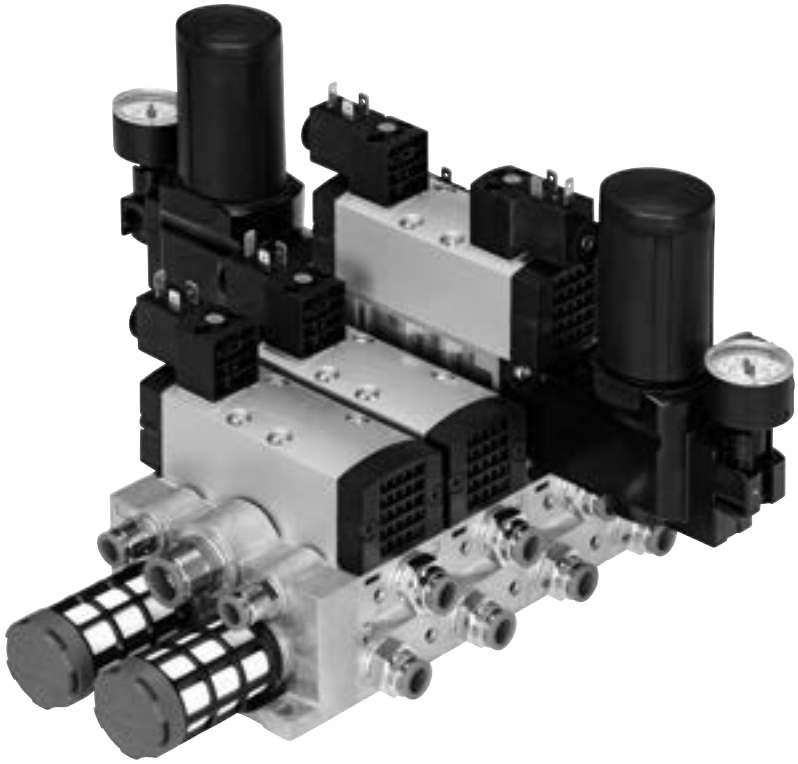

Innovative

- High-performance valves in a sturdy metal housing
- Individual electrical connection via square plug sockets or centrally for each valve via round plug sockets
- Valve replacement under pressure possible using vertical pressure shut-off plate
- Reverse operation
- Vacuum operation

Flexible

- Modular system offering a range of configuration options
- Conversions and extensions are possible at any time
- Integration of innovative function modules possible
  - Pressure regulator plate
  - Throttle plate
  - Vertical pressure shut-off plate
  - Vertical supply plate
- Vertical supply plates permit a flexible air supply and variable pressure zones
- Wide range of valve functions
- Extensive operating voltage range from 12 V DC to 230 V AC

Reliable

- Sturdy and durable metal components
  - Valves
  - Horizontally linked sub-bases
  - Vertically stacked sub-bases
- Fast troubleshooting thanks to LED in the plug socket or illuminating seal
- LED integrated in the valve with the round plug variant
- Reliable servicing thanks to valves that can be replaced quickly and easily
- Manual override
- Durable thanks to tried-and-tested piston spool valves

Easy to install

- Plug-in pressure gauges on the pressure regulator plate

Key features

Simple valve manifold assembly

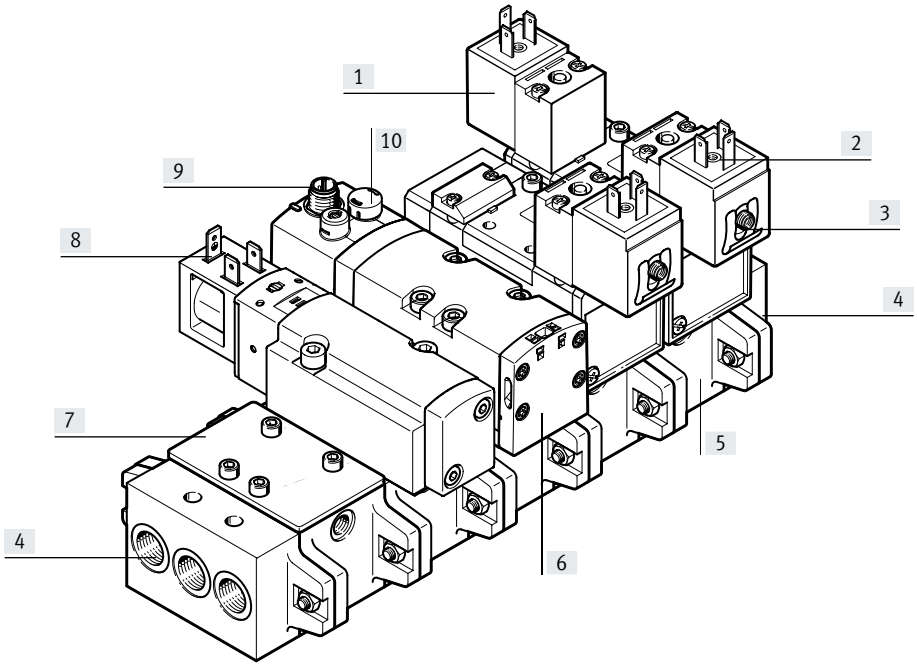

[1] Pilot valve with port pattern to ISO 15218
[2] Various voltages
[3] Armature tube for plug-on solenoid coils
[4] End plate
[5] Manifold sub-base
[6] Various valve functions
[7] Cover plate for vacant/expansion position
[8] Electrical connection type B to industry standard (11 mm)
[9] 3-pin round plug
[10] Manual override

Equipment options

2x 2/2-way valve, single solenoid

- Normally closed
- Normally closed, vacuum operation possible at port 3 and 5

2x 3/2-way valve, single solenoid

- Normally open
- normally closed
- 1x normally open, 1x normally closed
- Reverse operation possible

5/2-way valve

- Single solenoid, mechanical or pneumatic spring return
- Double solenoid
- Double solenoid, with dominant signal at port 14

5/3-way valve

- Mid-position pressurised
- Mid-position closed
- Mid-position exhausted

Operation with external pilot air supply

- For vacuum applications
- For working pressures lower than 3 bar
- For significant pressure fluctuations in the power section. Power unit and pneumatic control unit are isolated
- For heavily lubricated air in the power section
- For manifolds where the pressure zones are created via ducts 3 and 5 (not possible with 2x 3/2-way valves)
- For manifolds or pressure zones that are equipped with reversible 2x 3/2-way valves (valves on request)

Operation with internal pilot air supply

- For small pressure fluctuations in the power section
- For using pressure regulator plates in a vertical stacking construction, also in reverse operation
- As a low-cost solution

Reverse operation with compressed air supply via ducts 3 and 5

- Pressure zone separation via ducts 3 and 5
  - Example: duct 3 vacuum, duct 5 ejector pulse
  - Example: duct 3 high pressure for advancing the piston rod of a double-acting cylinder. Duct 5 low pressure for retracting the piston rod with low energy consumption
- 2x 3/2-way valves used as 5/4-way valve with controllable overlap and pressure zone separation with the reversible variant

Reverse operation with a pressure regulator plate, compressed air supply via duct 1

- Reversible pressure regulator combined with a reversible 2x 3/2-way valve regulates outputs 2 and 4
  - AB regulator for each of outputs 2 and 4
  - A regulator for output 4
  - B regulator for output 2
- Reversible pressure regulators are in the control position immediately after the power supply is switched on
  - Adjustment possible at all times
  - Dynamic response characteristics
  - Reduced regulator load because the supply pressure is maintained when the valve is switched
  - Not exhausted via the regulator

Key features

Valve manifold assembly with vertical stacking

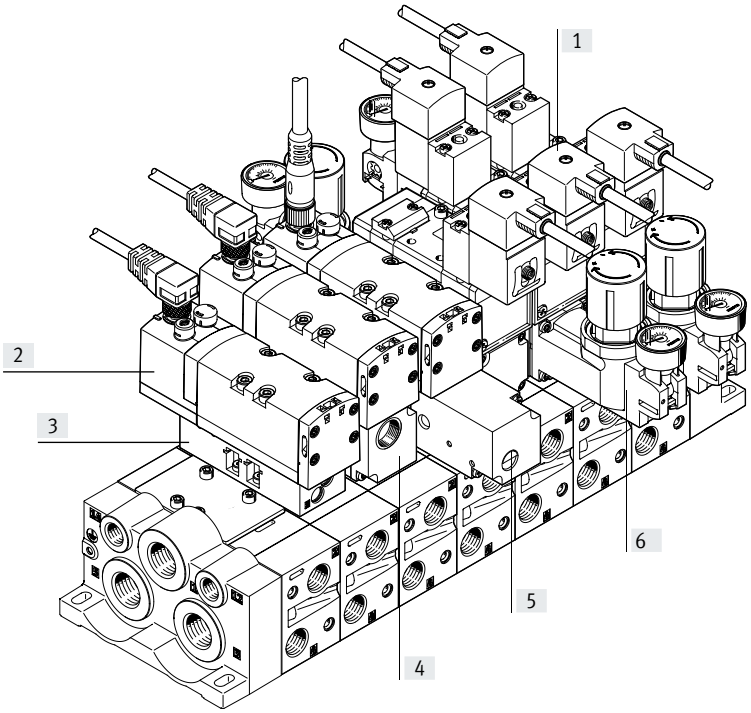

[1] Solenoid valve with individual pilot valves and port pattern to ISO 15218, can be connected using square plug sockets
[2] Solenoid valve with central round plug
[3] Throttle plate for adjusting the speed of the drive
[4] Vertical supply plate as separate compressed air supply for a valve
[5] Vertical pressure shut-off plate for replacing solenoid valves during operation
[6] Pressure regulator for adjusting the force of the actuated drive

Vertical stacking function

Pressure regulator

- Single variant to regulate the pressure in duct 4 or 2 or 1 at the valve
- Dual variant to regulate the pressure in ducts 4 and 2 individually
- As reversible version with ducts 1 and 3/5 swapped internally
- With pressure gauge connection

Throttle plate

- Designed with two throttle valves, at which the exhaust air flow rate at ducts 5 or 3 can be adjusted.
- The movement of the drive is initiated and the required speed is set via the throttle plate using the manual override on the valve.

Vertical pressure shut-off plate

- Equipped with a switch via which the compressed air supply can be shut off. As a result, components mounted on the vertical pressure shut-off plate (e.g. a valve) can be replaced without switching off the overall air supply.
- If the control chain has a redundant connection, the cycle can continue even in the case of a cyclical control system.

Vertical supply plate

- As additional air supply for a valve
- Separates the valve from duct 1 of the manifold sub-base
- To supply an additional pressure zone

Valves with solenoid coil MSN1/MSF

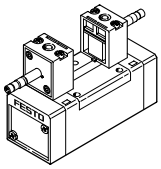

The directional control valve has a pilot control to ISO 15218. The solenoid coil plugged onto the armature tube can be chosen in different designs and operating voltages.

Valves with square plug type B to industry standard

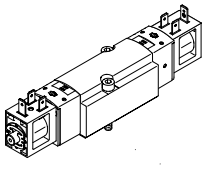

The electrical connection is established via a standardised plug with plug pattern type B, industry standard, 24 V DC.

Valves with central plug M12

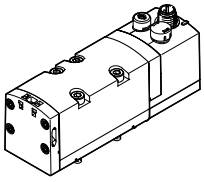

The electrical connection is established via a standardised M12 plug, 24 V DC (EN 61076-2-101).

Valves with individual plug M12x1

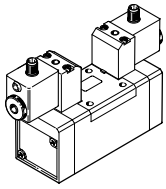

The electrical connection is established via a standardised M12 plug, 24 V DC (2-pin or 4-pin to VDMA).

Key features

Pressure regulator with one regulated duct

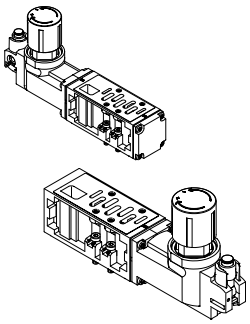

- For pressure regulation at the supply input duct 1. The set pressure is identical for ducts 2 and 4
- For pressure regulation at working port 4
  - The pressure regulator for reverse operation is supplied via duct 1 of the manifold sub-base and supplies duct 5 on the valve
  - The valve is exhausted via duct 1 to ducts 3 and 5 of the manifold sub-base
- For pressure regulation at working port 2
  - In reverse operation duct 3 is supplied

Pressure regulator with 2 regulated ducts

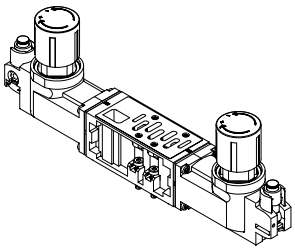

- For pressure regulation at working ports 4 and 2
- The pressure regulators for reverse operation are supplied via duct 1 of the manifold sub-base and supply ducts 5 and 3 on the valve
- The directional control valve is exhausted via duct 1 to ducts 3 and 5 of the manifold sub-base.

Vertical supply plate

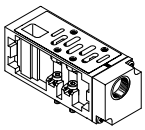

- As intermediate supply
  - For one valve
  - To supply an additional pressure zone
- Can be equipped with a valve

Throttle plate

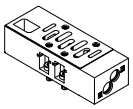

- Exhaust air flow control valves in ducts 3 and 5
- The throttle plates act as supply-air flow control for pressure zones that are created via ducts 3 and 5

Vertical pressure shut-off plate

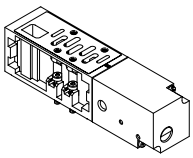

A switch activated with a slotted screwdriver shuts off duct 1:

- The throttle plates, pressure regulators or valves positioned above it can be replaced
- Other components of the control chain such as drives, for example, can be replaced once the valve has been exhausted

Pressure gauge

Plugs into the pressure regulators

Key features

Port pattern on sub-base to ISO 5599-1

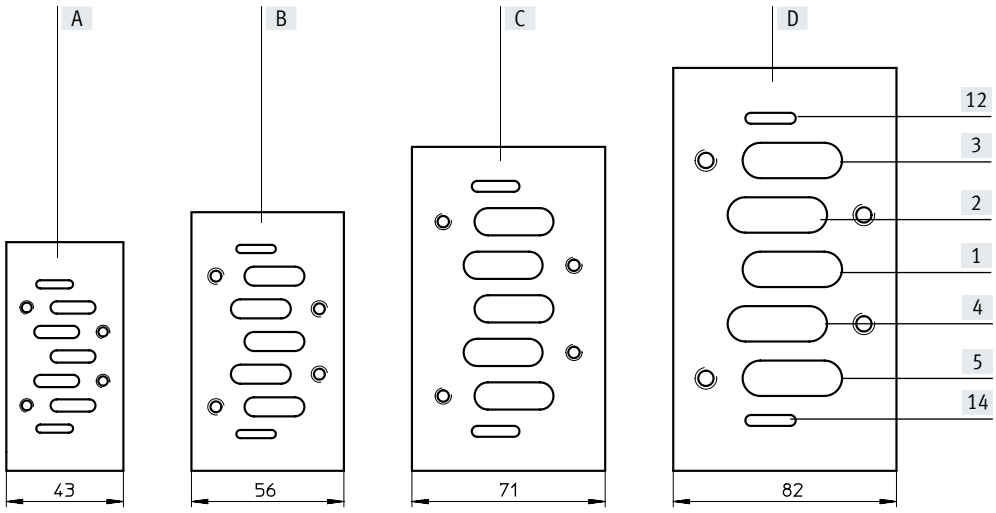

[A] Width 42 mm
[B] Width 52 mm
[C] Width 65 mm
[D] Width 76 mm

Sub-base port identifications

Duct	Function	Description
[14]	Control unit	Pilot air supply for pilot valves 12 and 14
[5]	Power unit	Exhaust port
[4]	Power unit	Working port
[1]	Power unit	Working air supply port
[2]	Power unit	Working port
[3]	Power unit	Exhaust port
[12]	Control unit	Exhaust port for pilot air supply

Key features

Pilot air supply

The pneumatic supply ports are located on the right and left end plates and on the supply plates.
The ports differ for the following types of pilot air supply:
- Internal pilot air supply
- External pilot air supply

The port for the external pilot air supply is on the right and left end plates. Internal pilot air supply takes place in the valve itself and the ports for pilot air supply are not provided on the end plates.

Note
If a gradual pressure build-up is required in the system by using a soft-start valve, then external pilot air should be selected whereby the pilot pressure is already applied at the point of switch-on.

Internal pilot air supply

Internal pilot air supply can be selected if the working pressure is between 2 and 10 bar, 3 and 10 bar, 2 and 16 bar or 3 and 16 bar, depending on the valve.

In this case the pilot air supply is branched from the compressed air supply 1 using an internal connection in the valve.

External pilot air supply

If the supply pressure is less than 2 or 3 bar, you must operate your valve manifold assembly VSVA using external pilot air supply.

The pilot air supply is then supplied via ports 12 and 14 on the end plates.

Using the seals with ducted/unducted pilot exhaust air

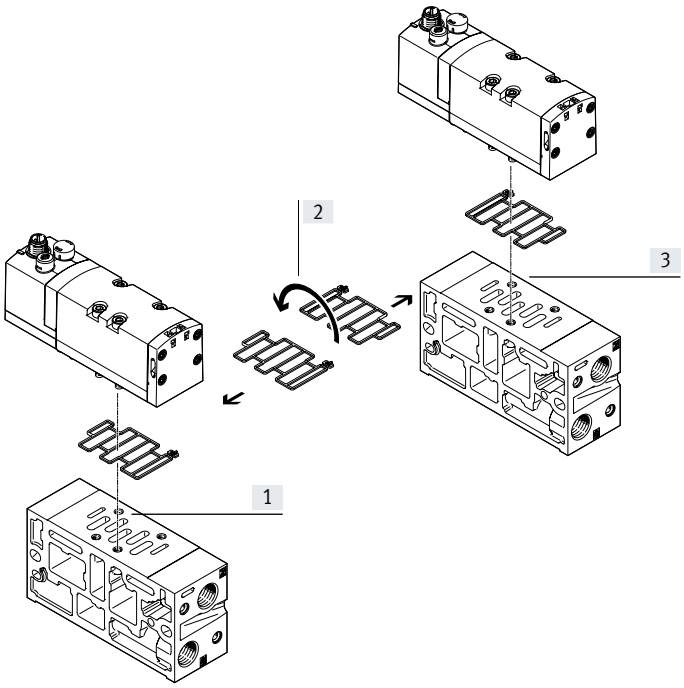

[1] Ducted pilot air exhaust
[2] Turning the seal 180°
[3] Unducted pilot air exhaust (as supplied)

Valve manifold assemblies VSVA are delivered with unducted pilot air exhaust. By turning the seal between the valve and manifold block, exhaust air (pilot air) can be diverted into pilot duct 12 and can thus be ducted and silenced (see illustration).

Key features

Pilot air supply via end plates		Description
Left end plate (graphical illustration)		
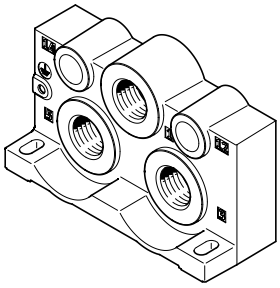	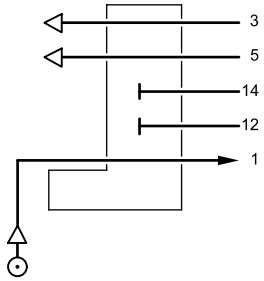	Internal pilot air supply • Pilot air supply is branched within the valve from port 1 • Port 12 is not available • Port 14 is not available • Exhaust air via ports 3 and 5 • Pilot exhaust air via port 12
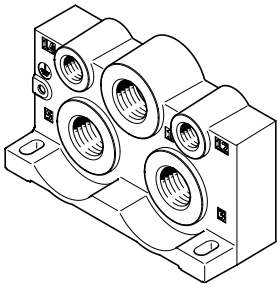	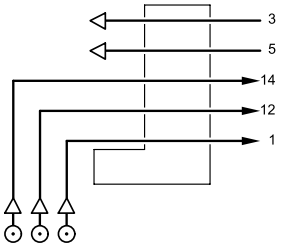	External pilot air supply • Pilot air supply via ports 12 and 14 • Exhaust air via ports 3 and 5 • Unducted pilot exhaust air
	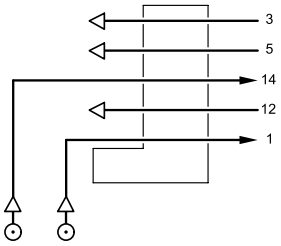	External pilot air supply, ducted pilot exhaust air • Pilot air supply via port 14 • Exhaust air via ports 3 and 5 • Pilot exhaust air via port 12 • For valves with central plug M12, 3-pin
Right end plate (graphical representation)		
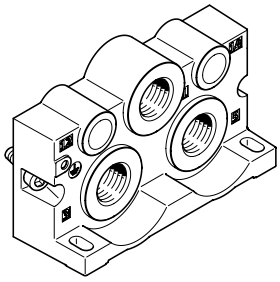	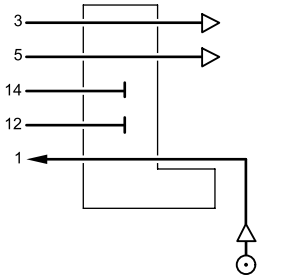	Internal pilot air supply • Pilot air supply is branched within the valve from port 1 • Port 12 is not available • Port 14 is not available • Exhaust air via ports 3 and 5 • Pilot exhaust air via port 12
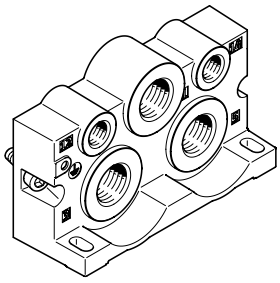	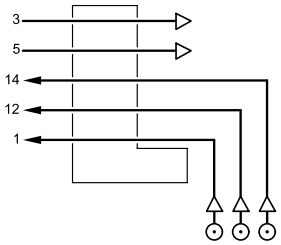	External pilot air supply • Pilot air supply via ports 12 and 14 • Exhaust air via ports 3 and 5 • Unducted pilot exhaust air
	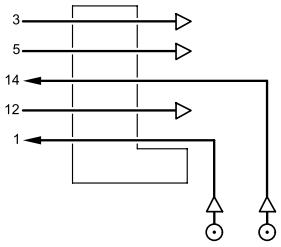	External pilot air supply, ducted pilot exhaust air • Pilot air supply via port 14 • Exhaust air via ports 3 and 5 • Pilot exhaust air via port 12 • For valves with central plug M12, 3-pin

Key features

Creating pressure zones and separating exhaust air

The valve manifold assembly VSVA offers a number of options for creating pressure zones if different working pressures are required.
Pressure zones are created by isolating the internal supply ducts between the manifold sub-bases by appropriate duct separation.

Compressed air is supplied and exhausted via the end plates and supply plates.
The position of the supply plates and duct separations can be freely selected.

Duct separations are integrated ex-works as per your order.
Duct separations can be distinguished by their coding, even when the valve manifold assembly is assembled.

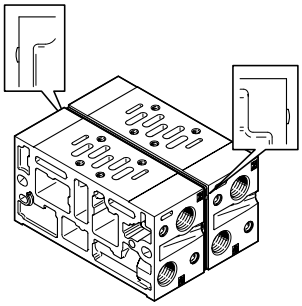

Creating pressure zones				
Separating seal				Description
Coding	Sample image	Coding	Basic representation	
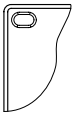	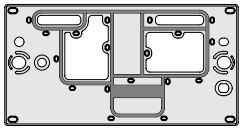	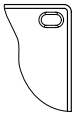	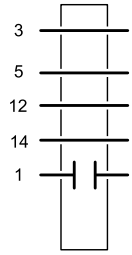	Duct 1 separate • Different supply pressure for each pressure zone • Supply pressure for each pressure zone can be switched off separately
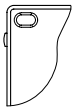	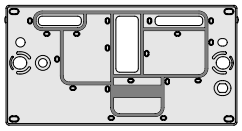	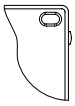	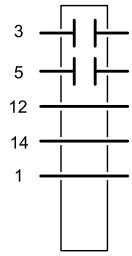	Ducts 3 and 5 separated • The valves (for different pressure zones) do not affect each other via the exhaust ducts
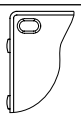	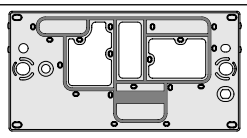	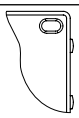	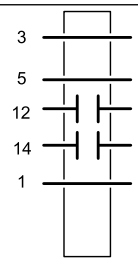	Ducts 12 and 14 separated • Different pilot pressure for each supply zone • Operation with internal and external pilot air supply possible according to pressure zone • Pilot pressure for each pressure zone can be switched off separately
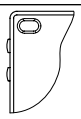	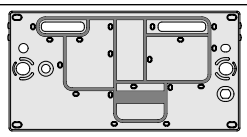	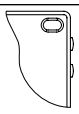	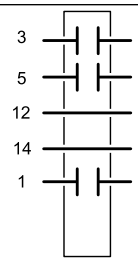	Ducts 1, 3 and 5 separated • Different supply pressure for each pressure zone • The valves (for different pressure zones) do not affect each other via the exhaust ducts • Supply pressure for each pressure zone can be switched off separately
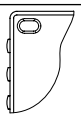	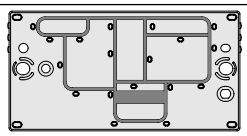	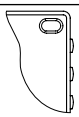	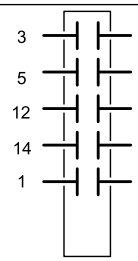	Ducts 1, 3, 5, 12 and 14 separated • Different supply pressure for each pressure zone • Supply pressure for each pressure zone can be switched off separately • The valves (for different pressure zones) do not affect each other via the exhaust ducts • Different pilot pressure for each supply zone • Operation with internal and external pilot air supply possible according to pressure zone • Pilot pressure for each pressure zone can be switched off separately

Key features

Examples: Creating pressure zones

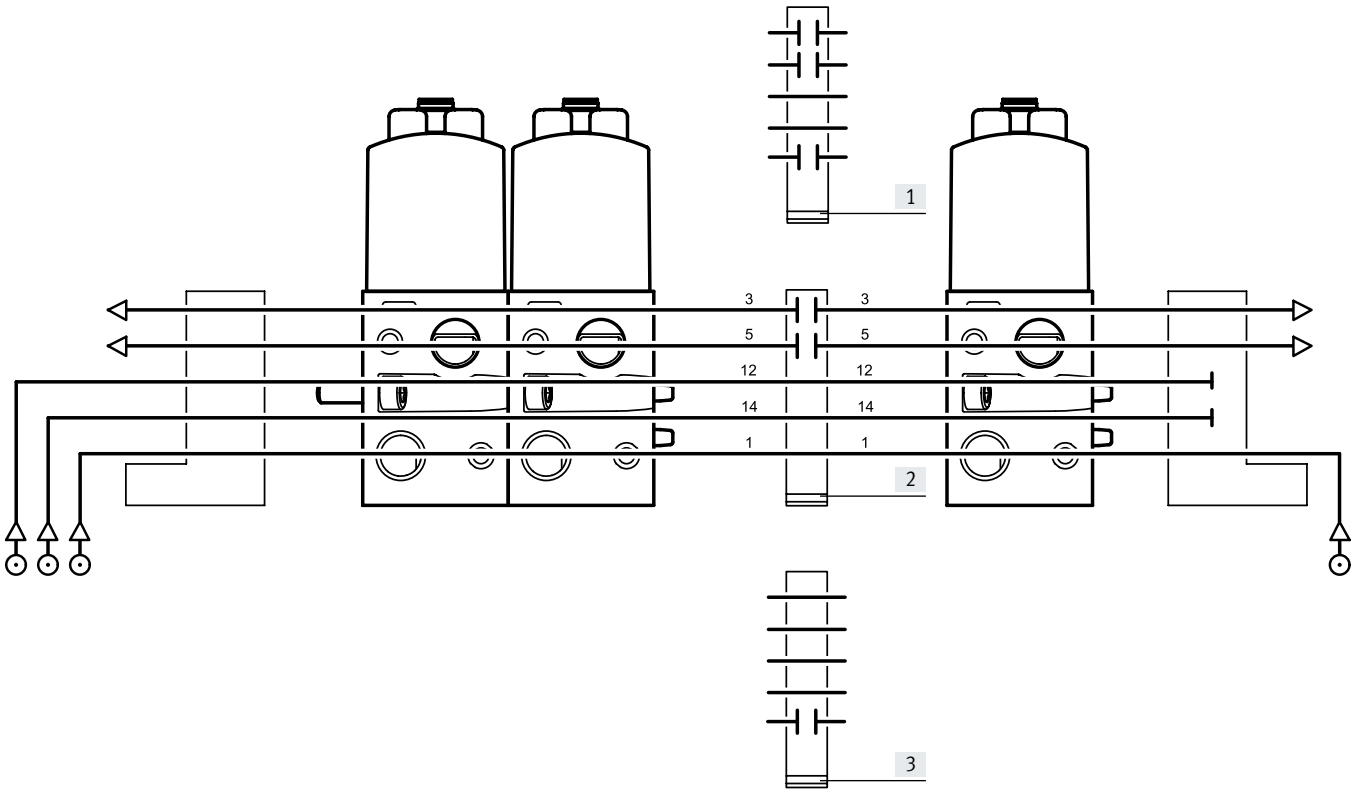

[1] Pressure zone separation in ducts 1, 3 and 5. Pressure supply and exhausting via the respective end plate for each of the two pressure zones. Pilot air is supplied jointly via the left end plate.

Potential benefit:
- Two different supply pressures
- The valves do not affect each other via the exhaust ducts

[2] Pressure zone separation in ducts 3 and 5. The pressure for both pressure zones is supplied jointly via the end plates. Each of the two pressure zones is exhausted separately via the respective end plate. Pilot air is supplied jointly via the left end plate.

Potential benefit:
- The valves do not affect each other via the exhaust ducts

[3] Pressure zone separation in duct 1. Pressure supply via the respective end plate for each of the two pressure zones. Both pressure zones are exhausted jointly via the end plates. Pilot air supplied jointly via the left end plate.

Potential benefit:
- Two different supply pressures

Key features

Use of 2x 3/2-way valve as 5/4-way valve

Code	Symbol	Table of values	Equivalent circuit symbol	Function
K	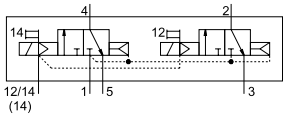	Y1 Y2 A 0 0 0 1 1 0 1 1	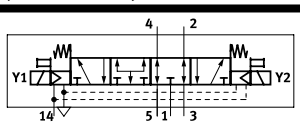	• Normally exhausted • The double-acting drive connected to ducts 2 and 4 is unpressurised when the valve is in the normal position and can be moved by an external force • If there is a signal at Y1(14) and Y2(12), there is pressure at ducts 2 and 4
	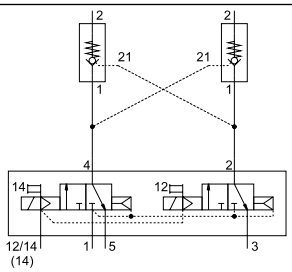	Y1 Y2 A 0 0 0 1 1 0 1 1	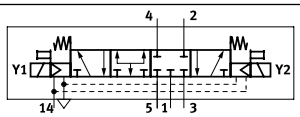	• Normally closed (by combining valve code K and two piloted check valves) • The piloted check valves connected to ducts 2 and 4 are unpressurised when the valve is in the normal position and the pressures in the drive close the check valves leak-tight • The drive remains stationary when the forces are in equilibrium • Leakages can only occur via the drive seals • If there is a signal at Y1(14) and Y2(12), the pressure at ducts 2 and 4 is the same
N	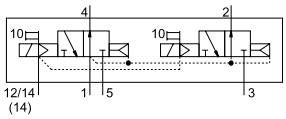	Y1 Y2 A 0 0 0 1 1 0 1 1	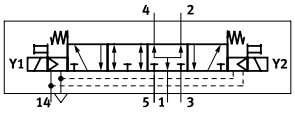	• Normally open • The double-acting drive connected to ducts 2 and 4 is supplied with the same pressure at both ends when the valve is in the normal position and remains stationary when the forces are balanced • If there is a signal at Y1(10) and Y2(10), ducts 2 and 4 are exhausted, the drive is unpressurised and can be moved by an external force
H	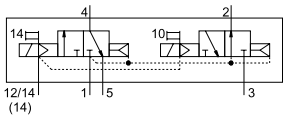	Y1 Y2 A 0 0 0 1 1 0 1 1	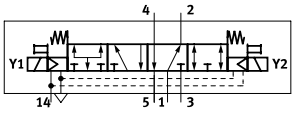	• Normally open to duct 2 • The double-acting drive connected to ducts 2 and 4 is supplied with pressure via duct 2 when the valve is in the normal position. Duct 4 is exhausted. When the system is in its initial position, the drive is thus in a clearly defined position, as would also be the case with a 5/2-way single solenoid valve • If there is a signal at Y1(14) and Y2(10), duct 2 is exhausted and there is pressure at duct 4. The drive leaves the initial position • A closed circuit can be created with this 2x 3/2-way valve by combining it with piloted check valves. However, this is then selected by an active signal at Y2(10).

Product range overview

Function		Type	Valve function	Flow rate Valve [l/min]	Operating voltage	→ Page/ Internet
Width 42 mm **Working port G1/4**	**Valve with armature tube for solenoid coil MSN**					
	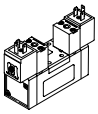	**MN1H-5/2**	5/2-way single solenoid valve	1200	12 V DC, 24 V DC, 24 V AC, 110 V AC, 230 V AC	26
		JMN1	5/2-way double solenoid valve	1200		
		MN1H-5/3	5/3-way solenoid valve, mid-position valve	1200		
	Valve with armature tube for solenoid coil MSF					
	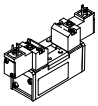	**MFH-5/2**	5/2-way single solenoid valve	1200	12 V DC, 24 V DC, 42 V DC, 24 V AC, 42 V AC, 48 V AC, 110 V AC, 120 V AC, 230 V AC, 240 V AC	38
		JMF	5/2-way double solenoid valve	1200		
		MFH-5/3	5/3-way solenoid valve, mid-position valve	1200		
	Valve with square plug type B to industry standard					
		VSVA-B-M52...A1	5/2-way valve, single solenoid	1342	24 V DC	50
		VSVA-B-B52...A1	5/2-way valve, double-solenoid	1341		
		VSVA-B-P53...A1	5/3-way valve, mid-position valve	1289		
	Valve with central plug M12, 3-pin					
	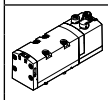	**VSVA-B-T22**	2x 2/2-way single solenoid valve	1300	24 V DC	54
		VSVA-B-T32	2x 3/2-way single solenoid valve	1100		
		VSVA-B-M52	5/2-way single solenoid valve	1300		
		VSVA-B-B52	5/2-way double solenoid valve	1300		
		VSVA-B-D52	5/2-way double solenoid valve	1300		
		VSVA-B-P53	5/3-way solenoid valve, mid-position valve	1300		
	Valve with individual plug M12					
	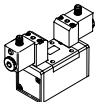	**MDH-5/2**	5/2-way single solenoid valve	1200	24 V DC, 42 V AC, 110 V AC, 230 V AC	69
		JMD	5/2-way double solenoid valve	1200		
		MDH-5/3	5/3-way solenoid valve, mid-position valve	1200		
	Pneumatic valve					
	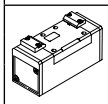	**VL-5/2**	5/2-way pneumatic valve, monostable	1200	–	88
		J	5/2-way pneumatic valve, bistable	1200		
		VL-5/3	5/3-way pneumatic valve, mid-position valve	1200		

Product range overview

Function		Type	Valve function	Flow rate Valve [l/min]	Operating voltage	→ Page/ Internet
Width 52 mm **Working port G3/8**	**Valve with armature tube for solenoid coil MSN**					
	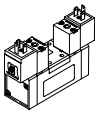	**MN1H-5/2**	5/2-way single solenoid valve	2300	12 V DC, 24 V DC, 24 V AC, 110 V AC, 230 V AC	30
		JMN1	5/2-way double solenoid valve	2300		
		MN1H-5/3	5/3-way solenoid valve, mid-position valve	2300		
	Valve with armature tube for solenoid coil MSF					
	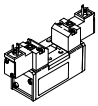	**MFH-5/2**	5/2-way single solenoid valve	2300	12 V DC, 24 V DC, 42 V DC, 24 V AC, 42 V AC, 48 V AC, 110 V AC, 120 V AC, 230 V AC, 240 V AC	42
		JMF	5/2-way double solenoid valve	2300		
		MFH-5/3	5/3-way solenoid valve, mid-position valve	2300		
	Valve with central plug M12, 3-pin					
		VSVA-B-T22	2x 2/2-way single solenoid valve	2800	24 V DC	60
		VSVA-B-T32	2x 3/2-way single solenoid valve	2200		
		VSVA-B-M52	5/2-way single solenoid valve	2800		
		VSVA-B-B52	5/2-way double solenoid valve	2800		
		VSVA-B-D52	5/2-way double solenoid valve	2800		
		VSVA-B-P53	5/3-way solenoid valve, mid-position valve	2700		
	Valve with individual plug M12					
	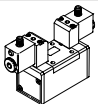	**MDH-5/2**	5/2-way single solenoid valve	2300	24 V DC, 42 V AC, 110 V AC, 230 V AC	73
		JMD	5/2-way double solenoid valve	2300		
		MDH-5/3	5/3-way solenoid valve, mid-position valve	2300		
	Pneumatic valve					
	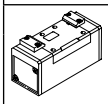	**VL-5/2**	5/2-way pneumatic valve, monostable	2300	–	93
		J	5/2-way pneumatic valve, bistable	2300		
		VL-5/3	5/3-way pneumatic valve, mid-position valve	2300		

Product range overview

Function		Type	Valve function	Flow rate Valve [l/min]	Operating voltage	➔ Page/ Internet
Width 65 mm	**Valve with armature tube for solenoid coil MSN**					
Working port G1/2	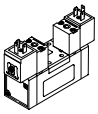	**MN1H-5/2**	5/2-way single solenoid valve	4500	12 V DC, 24 V DC, 24 V AC, 110 V AC, 230 V AC	34
		JMN1	5/2-way double solenoid valve	4500		
		MN1H-5/3	5/3-way solenoid valve, mid-position valve	4000		
	Valve with armature tube for solenoid coil MSF					
	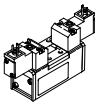	**MFH-5/2**	5/2-way single solenoid valve	4500	12 V DC, 24 V DC, 42 V DC, 24 V AC, 42 V AC, 48 V AC, 110 V AC, 120 V AC, 230 V AC, 240 V AC	46
		JMF	5/2-way double solenoid valve	4500		
		MFH-5/3	5/3-way solenoid valve, mid-position valve	4000		
	Valve with central plug M12, 4-pin					
	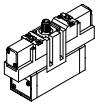	**MEBH-5/2**	5/2-way single solenoid valve	4500	24 V DC	65
		JMEB	5/2-way double solenoid valve	4500		
		MEBH-5/3	5/3-way solenoid valve, mid-position valve	4000		
	Valve with individual plug M12					
	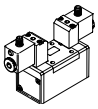	**MDH-5/2**	5/2-way single solenoid valve	4500	24 V DC, 42 V AC, 110 V AC, 230 V AC	77
		JMD	5/2-way double solenoid valve	4500		
		MDH-5/3	5/3-way solenoid valve, mid-position valve	4000		
	Pneumatic valve					
	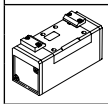	**VL-5/2**	5/2-way pneumatic valve, monostable	4500	–	98
		J	5/2-way pneumatic valve, bistable	4500		
		VL-5/3	5/3-way pneumatic valve, mid-position valve	4100		
Width 76 mm	**Valve with individual plug M12**					
Working port G3/4	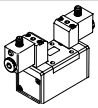	**MDH-5/2**	5/2-way single solenoid valve	6000	24 V DC, 42 V AC, 110 V AC, 230 V AC	81
		JMD	5/2-way double solenoid valve	6000		
		MDH-5/3	5/3-way solenoid valve, mid-position valve	4800		
	Pneumatic valve					
		VL-5/2	5/2-way pneumatic valve, monostable	6000	–	102
		J	5/2-way pneumatic valve, bistable	6000		
		VL-5/3	5/3-way pneumatic valve, mid-position valve	4800		

Type codes for valves with round plug

001	Series	
VSVA	Standards-based valve to ISO 5599-1	

002	Directional control valve type	
B	Sub-base valve	

003	Valve function	
T22C	2x2/2-way valve, normally closed	
T32U	2x3/2-way valve, normally open	
T32F	2x3/2-way valve, normally open, reversible	
T32C	2x3/2-way valve, normally closed	
T32N	2x3/2-way valve, normally closed, reversible	
T32H	2x3/2-way valve, 1x normally closed, 1x normally open	
T32W	2x3/2-way valve, 1x normally closed, 1x normally open, reversible	
M52	5/2-way valve, single solenoid/monostable	
B52	5/2-way valve, double solenoid/bistable	
D52	5/2-way valve, double solenoid/bistable, dominant signal	
P53U	5/3-way valve, mid-position pressurised	
P53E	5/3-way valve, mid-position exhausted|	
P53C	5/3-way valve, mid-position closed	

004	Reset method for monostable/single solenoid valves	
	None	
A	Pneumatic spring	
M	Mechanical spring	

005	Pilot air	
	Internal	
Z	External	

006	Manual override	
H	Non-detenting	
D	Non-detenting, detenting	

007	Pneumatic connection	
A2	18 mm (02) ISO 15407-1/-2	
A1	26 mm (01) ISO 15407-1/-2	
D1	42 mm (1) ISO 5599-1/-2	
D2	52 mm (2) ISO 5599-1/-2	

008	Nominal operating voltage	
1	24 V DC	

009	Electrical connection	
R2	Central connector M8	
R5	Central plug M12	

010	Display	
L	LED	

Type codes for valves with square plug type B to industry standard

001	Series	
VSVA	Standards-based valve VSVA	

002	Directional control valve type	
B	Sub-base valve	

003	Design principle	
	Piston spool	
K	Piston spool with sealing ring	

004	Valve function	
T22C	2x2/2-way valve, normally closed	
T32U	2x3/2-way valve, normally open	
T32F	2x3/2-way valve, normally open, reversible	
T32C	2x3/2-way valve, normally closed	
T32N	2x3/2-way valve, normally closed, reversible	
T32H	2x3/2-way valve, 1x normally closed, 1x normally open	
T32W	2x3/2-way valve, 1x normally closed, 1x normally open, reversible	
B52	5/2-way valve, double solenoid/bistable	
M52	5/2-way valve, single solenoid/monostable	
D52	5/2-way valve, double solenoid/bistable, dominant signal	
P53U	5/3-way valve, mid-position pressurised	
P53E	5/3-way valve, mid-position exhausted|	
P53C	5/3-way valve, mid-position closed	

005	Reset method for monostable/single solenoid valves	
	None	
A	Pneumatic spring	
M	Mechanical spring	

006	Pilot air	
	Internal	
Z	External	

007	Manual override	
	None	
D	Non-detenting, detenting	
H	Non-detenting	

008	Pneumatic connection	
A2	18 mm (02) ISO 15407-1/-2	
A1	26 mm (01) ISO 15407-1/-2	
D1	42 mm (1) ISO 5599-1/-2	

009	Nominal operating voltage	
	None	
1	24 V DC	
1A	24 V AC/50-60 Hz	
2A	110 V AC/50-60 Hz	
3A	230 V AC/50-60 Hz	
5	12 V DC	

010	Electrical connection	
B2	Connection pattern type B, industry standard	
C1	Plug pattern type C, to EN 175301-803	
P1	Interface for pilot valve size 15 mm to ISO 15218 (CNOMO)	
R3	Individual plug M12, to EN 61076-2-101	

011	Position sensing	
	None	
APC	Proximity sensor, PNP with open cable ends	
APP	Proximity sensor, PNP with M8 plug	
APX	Proximity sensor, PNP with cable and plug M12	
ANC	Proximity sensor, NPN with open cable end	
ANP	Proximity sensor, NPN with plug M8	

Peripherals overview

Valve on individual sub-base

Solenoid valve with solenoid coil MSN1

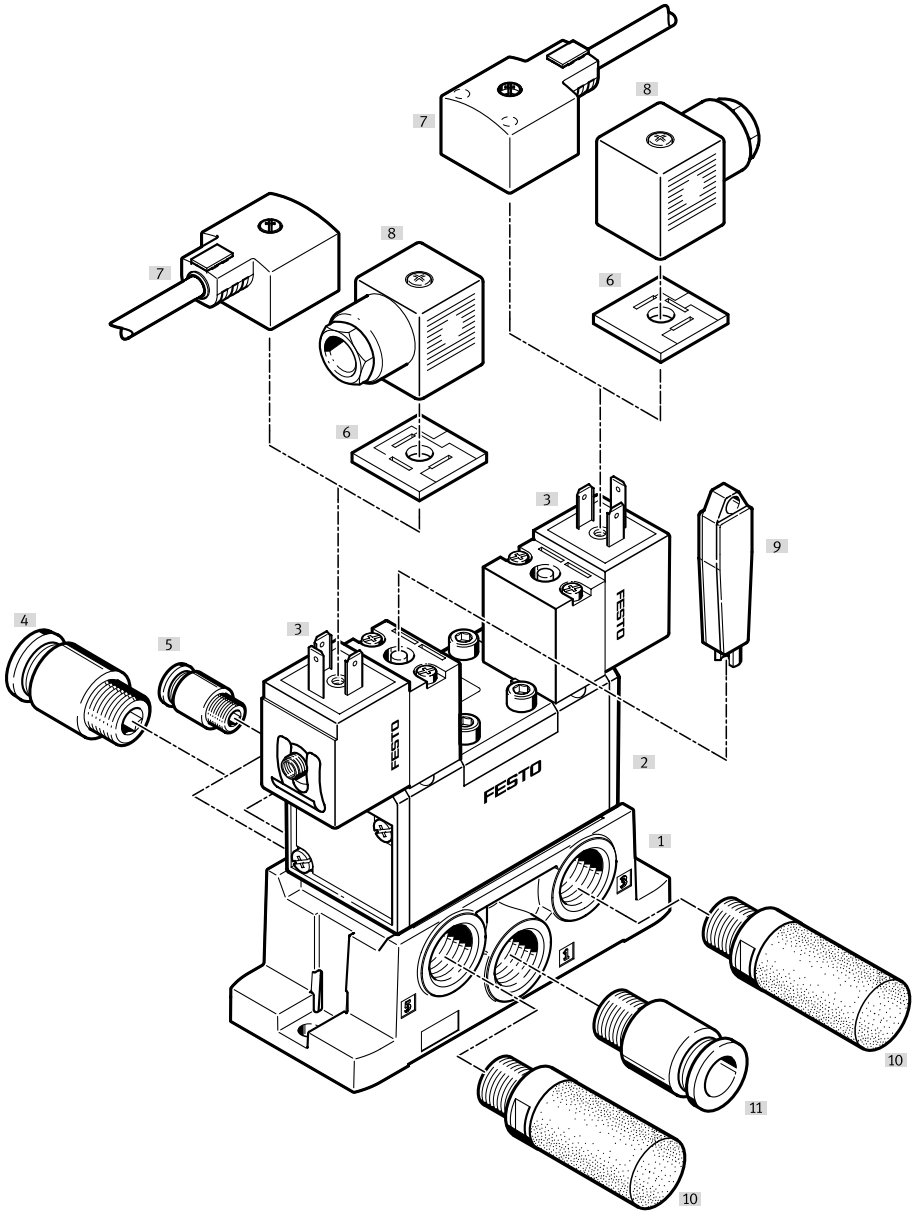

Individual components

		Type	Brief description	➔ Page/ Internet
[1]	Sub-base	VABS-S1-...	Pneumatic ports on the side	105
	Individual sub-base	NAS-...	Pneumatic ports on the side	105
		NAU-...	Pneumatic ports underneath	108
[2]	Solenoid valve	MN1H-...	Solenoid valve with solenoid coil, port pattern to ISO 5599-1, corresponding solenoid coils ➔ page 139	26
[3]	Solenoid coil	MSN1...	Solenoid coil	137
[4]	Push-in fitting	QS-...	For connecting tubing with standard O.D.	qs
[5]	Push-in fitting	QS-...	For connecting tubing with standard O.D.	qs
[6]	Illuminating seal	M...-LD	For displaying the signal status	138
[7]	Connecting cable	KMC-..., NEBV-...	With LED or without LED	138
[8]	Plug socket	MSSD-...	For self-assembly	138
[9]	Manual override	AHB-...	Tool for detenting manual override	139
[10]	Silencer	U-...	For fitting in exhaust ports	silencer
[11]	Push-in fitting	QS-...	For connecting tubing with standard O.D.	qs

Peripherals overview

Valve on individual sub-base

Solenoid valve with central plug M12, 3-pin

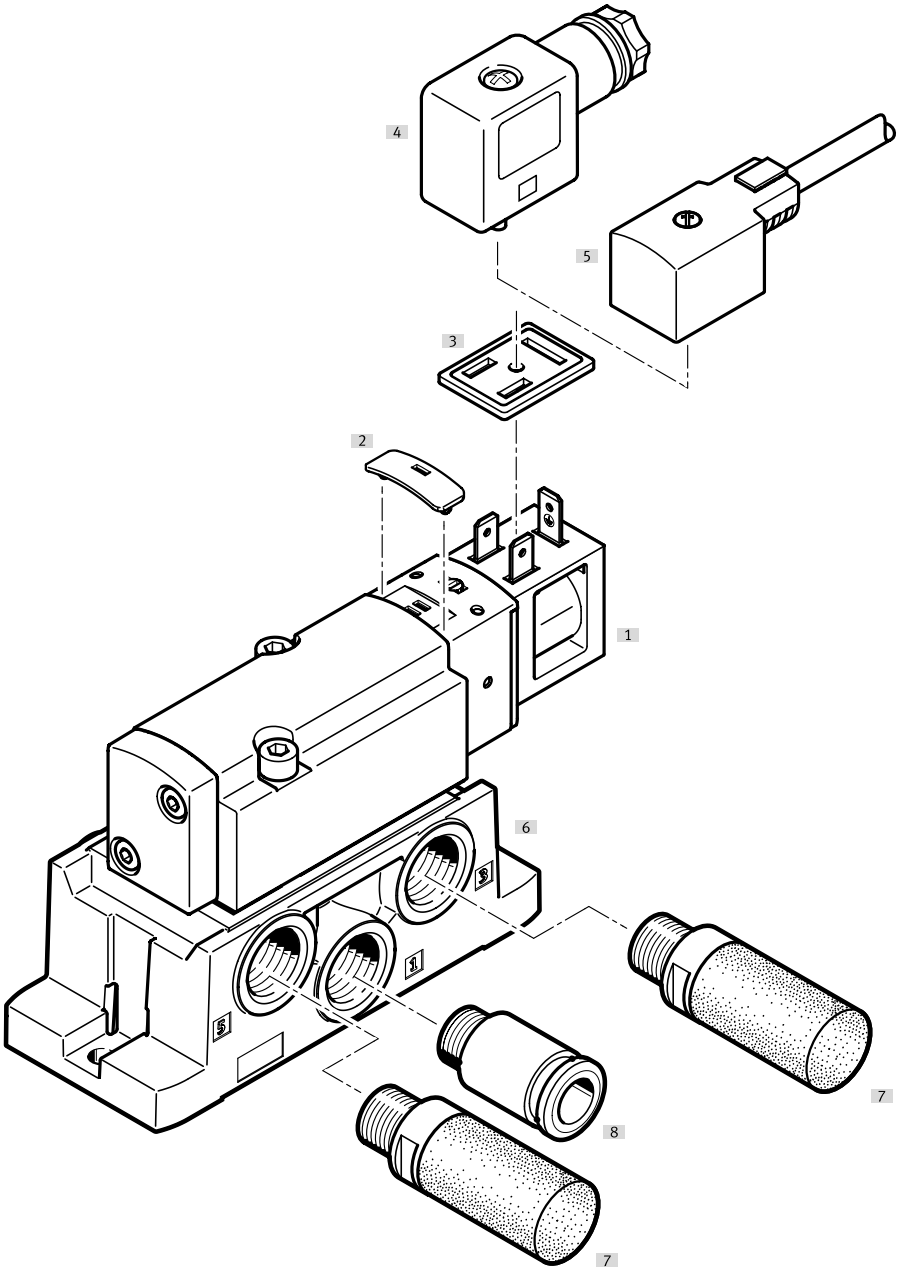

Individual components

		Type	Brief description	→ Page/ Internet
[1]	Solenoid valve	VSVA-BK...	Solenoid valve with square plug type B to industry standard, port pattern to ISO 5599-1	50
[2]	Cover cap	VAMC-...	For manual override, non-detenting or covered	139
[3]	Illuminating seal	MF-LD	For displaying the signal status	138
[4]	Plug socket	MSSD-F-...	For self-assembly	138
[5]	Connecting cable	KMF-...	–	138
[6]	Sub-base	VABS-S1-...	Pneumatic ports on the side	105
	Individual sub-base	NAS-...	Pneumatic ports on the side	105
		NAU-...	Pneumatic ports underneath	108
[7]	Silencer	U-...	For fitting in exhaust ports	silencer
[8]	Push-in fitting	QS-...	For connecting tubing with standard O.D.	qs

Peripherals overview

Valve on individual sub-base

Solenoid valve with central plug M12, 3-pin

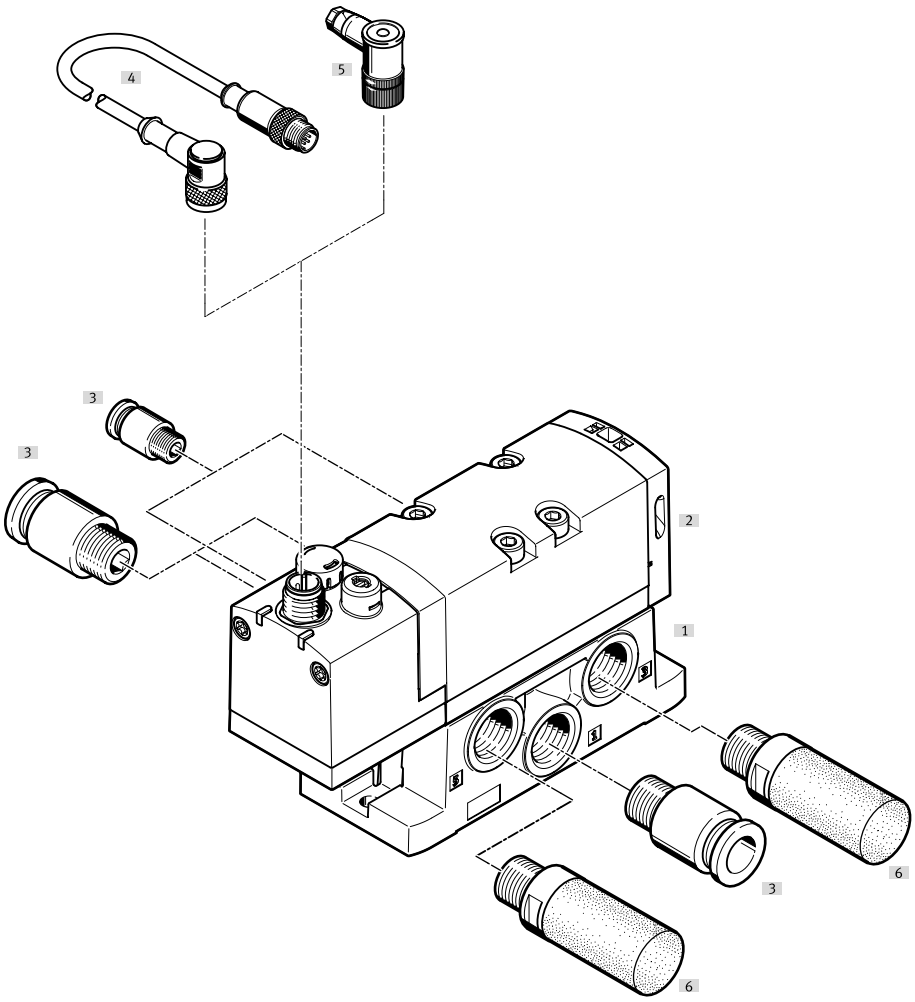

Individual components

		Type	Brief description	→ Page/ Internet
[1]	Sub-base	VABS-S1-...	Pneumatic ports on the side	105
	Individual sub-base	NAS-...	Pneumatic ports on the side	105
		NAU-...	Pneumatic ports underneath	108
[2]	Solenoid valve	VSVA-B...	Solenoid valve with central plug M12, 3-pin, port pattern to ISO 5599-1	54
[3]	Push-in fitting	QS-...	For connecting tubing with standard O.D.	qs
[4]	Connecting cable	NEBU-...	–	139
[5]	Plug socket	SIE-...	For self-assembly	139
[6]	Silencer	U-...	For fitting in exhaust ports	silencer

Peripherals overview

Accessories

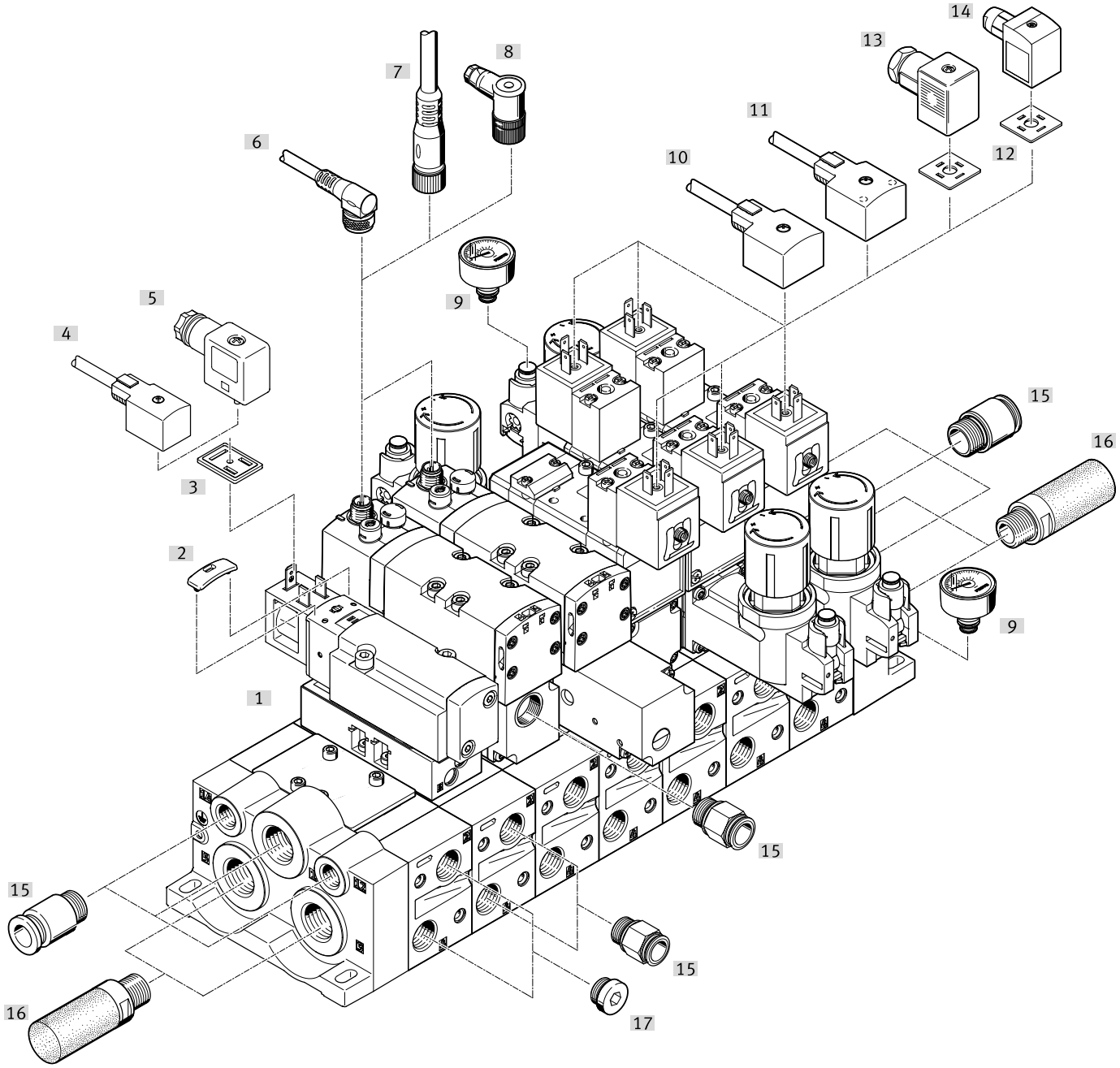

Peripherals overview

Individual components		Type	Brief description	➔ Page/ Internet
[1]	Solenoid valve	MN1H-...	Solenoid valve with solenoid coil, port pattern to ISO 5599-1, corresponding solenoid coils ➔ page 139	26
		VSVA-BK...	Solenoid valve with square plug type B to industry standard, port pattern to ISO 5599-1	50
		VSVA-B...	Solenoid valve with central plug M12, 3-pin, port pattern to ISO 5599-1	54
[2]	Cover cap	VAMC-...	For manual override, non-detenting or covered	139
[3]	Illuminating seal	MF-LD	For displaying the signal status	138
[4]	Connecting cable	KMF-1...	With LED	138
[5]	Socket	MSSD-F	Connection pattern type B, industry standard	138
[6]	Connecting cable	NEBU-...	Angled socket, M12x1, 5-pin	139
[7]	Connecting cable	NEBU-...	Straight socket, M12x1, 5-pin	139
[8]	Socket	SIE-...	For self-assembly	139
[9]	Pressure gauge	PAGN-...	With push-in connector	139
[10]	Connecting cable	KMC-..., NEBV-...	Without LED	138
[11]	Connecting cable	KMC-...LED, NEBV-...	With LED	138
[12]	Illuminating seal	M...-LD	For displaying the signal status	138
[13]	Socket	MSSD-C-M16	With screw terminal connection	138
[14]	Socket	MSSD-C-S-M16	With insulation displacement connection	138
[15]	Push-in fitting	QS-...	For connecting tubing with standard O.D.	qs
[16]	Silencer	U-...	For fitting in exhaust ports	silencer
[17]	Blanking plug	B-...	For sealing ports that are not required	b

System overview

Manifold assembly

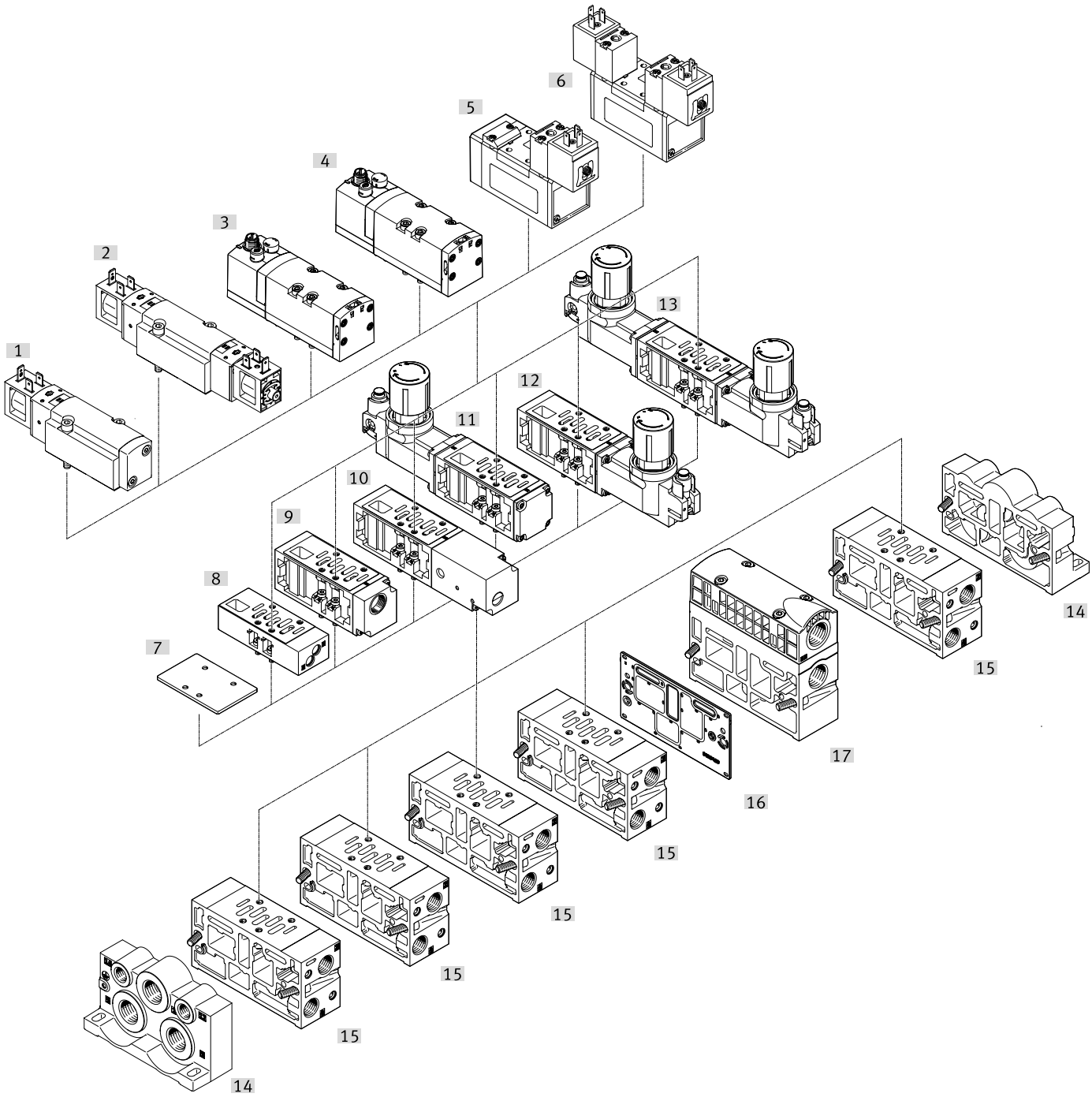

System overview

Individual components		Type	Brief description	➔ Page/ Internet
[1]	Solenoid valve	VSVA-BK...	Solenoid valve with square plug type B to industry standard, port pattern to ISO 5599-1	50
[2]				
[3]	Solenoid valve	VSVA-...	With central plug M12, 3-pin	54
[4]		MEBH-...	With central plug M12, 4-pin	65
		JMEBH-...	With central plug M12, 4-pin	65
		JMEBDH-...	With central plug M12, 4-pin	65
[5]	Solenoid valve	MN1H-...	With armature tube for solenoid coil MSN1	26
[6]		JMN1H-...	With armature tube for solenoid coil MSN1	26
		JMN1DH-...	With armature tube for solenoid coil MSN1	26
		MFH-...	With armature tube for solenoid coil MSF	38
		JMFH-...	With armature tube for solenoid coil MSF	38
		JMFDH-...	With armature tube for solenoid coil MSF	38
		MDH-...	With solenoid coil MD with round plug M12x1	69
		JMDH-...	With solenoid coil MD with round plug M12x1	69
		JMDDH-...	With solenoid coil MD with round plug M12x1	69
[7]	Cover plate	NDV-...	For sealing unused manifold sub-bases	120
[8]	Throttle plate	VABF-S1-...-F1B1-C	Restricts the flow of exhaust air in ducts 3 and 5	124
		GRO-ZP-...	Restricts the flow of exhaust air in ducts 3 and 5	124
[9]	Vertical supply plate	VABF-S1-...-P1A3-G38	Alternative compressed air supply for port 1 of the mounted valve	127
[10]	Vertical pressure shut-off plate	VABF-S1-...-L1D1-C	For blocking duct 1 and duct 14 upstream of a valve	129
[11]	Regulator plate	VABF-S1-...-R...	Pressure regulator for manually setting a particular pressure in the regulated port upstream or downstream of the valve	131
[12]				
[13]		LR-ZP-...	Pressure regulator for manually setting a particular pressure in the regulated port upstream or downstream of the valve	131
[14]	End plate	VABE-S1-...	With ports for air supply 1 and exhausts 3 and 5 and pilot air supply 12 and 14	117
[15]	Manifold sub-base	VABV-S1-...	With ports 2 and 4 underneath	110
[16]	Duct separation	VABD-S1-1-...	For sealing ducts 1, 3, 5, 12 and 14 between end plate and manifold sub-base, e.g. to create pressure zones	121
[17]	Supply plate	VABF-S1-1-...	With ports for air supply 1 and exhausts 3 and 5	112

System overview

Manifold assembly

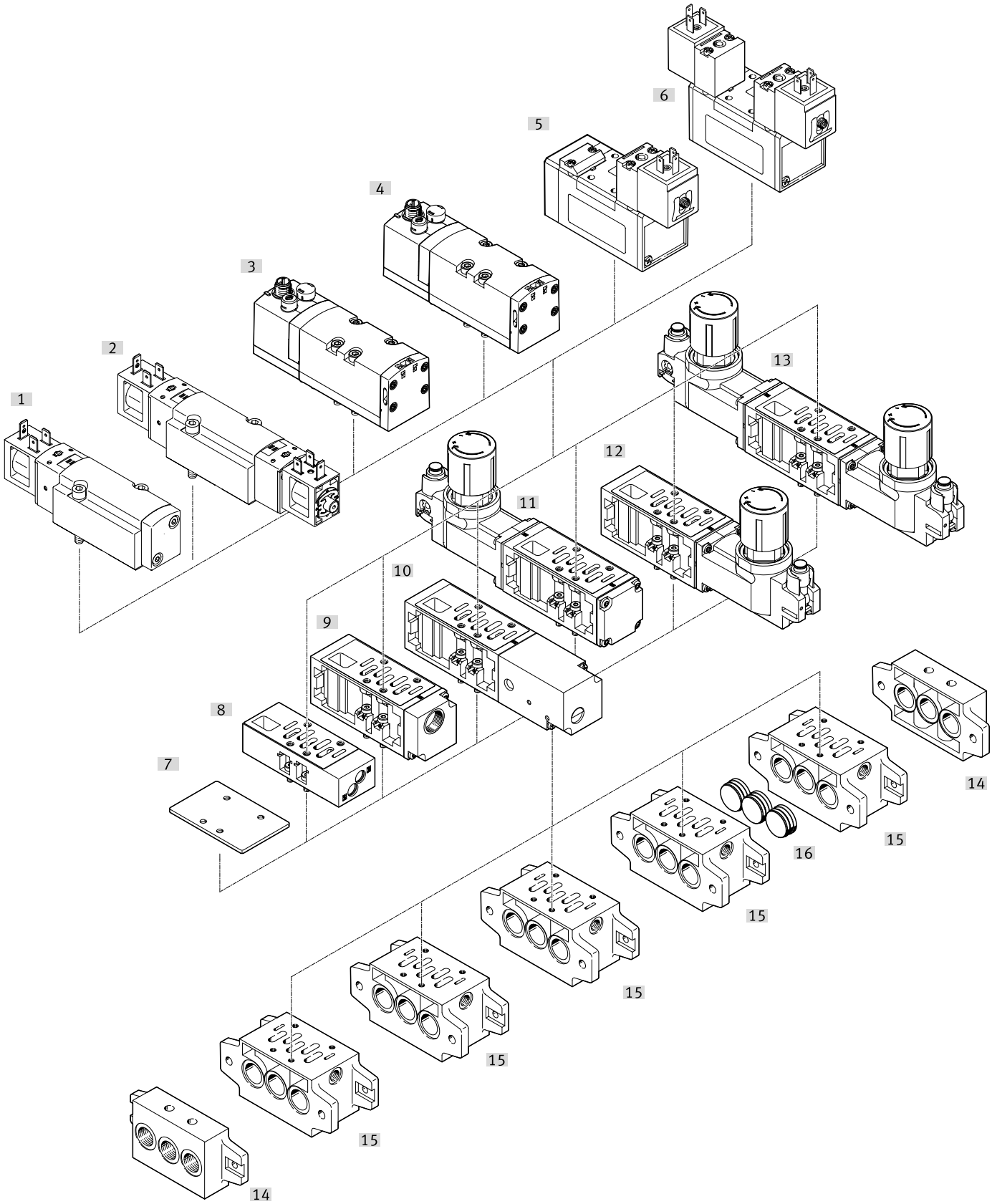

System overview

Individual components		Type	Brief description	➔ Page/ Internet
[1]	Solenoid valve	VSVA-BK...	Solenoid valve with square plug type B to industry standard, port pattern to ISO 5599-1	50
[2]				
[3]	Solenoid valve	VSVA-...	With central plug M12, 3-pin	54
[4]		MEBH-...	With central plug M12, 4-pin	65
		JMEBH-...	With central plug M12, 4-pin	65
		JMEBDH-...	With central plug M12, 4-pin	65
[5]	Solenoid valve	MN1H-...	With armature tube for solenoid coil MSN1	26
[6]		JMN1H-...	With armature tube for solenoid coil MSN1	26
		JMN1DH-...	With armature tube for solenoid coil MSN1	26
		MFH-...	With armature tube for solenoid coil MSF	38
		JMFH-...	With armature tube for solenoid coil MSF	38
		JMFDH-...	With armature tube for solenoid coil MSF	38
		MDH-...	With solenoid coil MD with round plug M12x1	69
		JMDH-...	With solenoid coil MD with round plug M12x1	69
		JMDDH-...	With solenoid coil MD with round plug M12x1	69
[7]	Cover plate	NDV-...	For sealing unused manifold sub-bases	120
[8]	Throttle plate	VABF-S1-...-F1B1-C	Restricts the flow of exhaust air in ducts 3 and 5	124
		GRO-ZP-...	Restricts the flow of exhaust air in ducts 3 and 5	124
[9]	Vertical supply plate	VABF-S1-...-P1A3-G38	Alternative compressed air supply for port 1 of the mounted valve	127
[10]	Vertical pressure shut-off plate	VABF-S1-...-L1D1-C	For blocking duct 1 and duct 14 upstream of a valve	129
[11]	Regulator plate	VABF-S1-...-R...	Pressure regulator for manually setting a particular pressure in the regulated port upstream or downstream of the valve	131
[12]				
[13]		LR-ZP-...	Pressure regulator for manually setting a particular pressure in the regulated port upstream or downstream of the valve	131
[14]	End plate kit	NEV-...	With ports for air supply 1 and exhausts 3 and 5	116
[15]	Manifold sub-base	NAV-...	With ports 2 and 4 underneath	110
[16]	Isolating disc	NSC-...	For sealing ducts 1, 3, 5 between end plate and manifold sub-base, e.g. to create pressure zones	120

Datasheet – Width 42 mm

- Flow rate
  1200 l/min

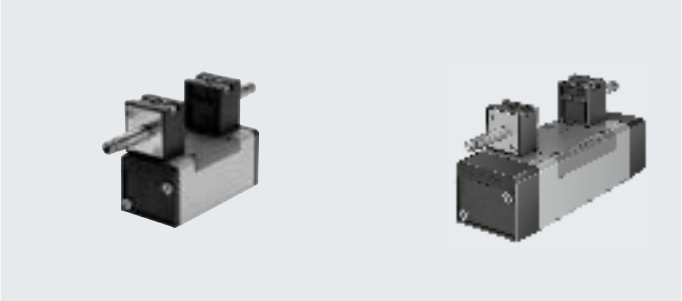

General technical data			
Design			Piston spool
Sealing principle			Soft
Actuation type			Electrical
Type of control			Piloted
Flow direction	With external pilot air supply		Reversible
	With internal pilot air supply		Not reversible
Exhaust air function			Can be throttled
Manual override			Non-detenting, detenting via accessory
Type of mounting			On sub-base, via through-hole
Mounting position			Any
Nominal width		[mm]	8
Overlap			Positive overlap
Width		[mm]	42
Grid dimension		[mm]	43
Pneumatic connections			Sub-base size 1 to ISO 5599-1
Noise level		[dB (A)]	85
Conforms to standard			ISO 5599-1
Certification	With internal pilot air supply		c UL us - Recognized (OL)
Maritime classification[1)]			See certificate

1) Additional information: www.festo.com/catalogue/... → Support/Downloads.

Flow rates				
Valve function		5/2-way valve, single solenoid	5/2-way valve, double solenoid	5/3-way valve
Standard nominal flow rate	[l/min]	1200		

Switching times [ms]					
		Switching time on	Switching time off	Switching time changeover	Switching time changeover (dominant)
5/2-way valve, single solenoid	MN1H-5/2-D-1-C	23	32	–	–
	MN1H-5/2-D-1-S-C	23	32	–	–
	MN1H-5/2-D-1-FR-C	17	39	–	–
	MN1H-5/2-D-1-FR-S-C	17	39	–	–
5/2-way valve, double solenoid	JMN1H-5/2-D-1-C	–	–	18	–
	JMN1H-5/2-D-1-S-C	–	–	18	–
	JMN1DH-5/2-D-1-C	–	–	18	15
	JMN1DH-5/2-D-1-S-C	–	–	18	15
5/3-way valve	MN1H-5/3G-D-1-C	20	44	–	–
	MN1H-5/3G-D-1-S-C	20	44	–	–
	MN1H-5/3E-D-1-C	20	46	–	–
	MN1H-5/3E-D-1-S-C	20	46	–	–
	MN1H-5/3B-D-1-C	20	46	–	–
	MN1H-5/3B-D-1-S-C	20	46	–	–

Datasheet – Width 42 mm

Operating and environmental conditions				
Reset method			Pneumatic spring	Mechanical spring
Operating medium			Compressed air to ISO 8573-1:2010 [7:4:4]	
Pilot medium			Compressed air to ISO 8573-1:2010 [7:4:4]	
Note on the operating/pilot medium			Lubricated operation possible (required for further operation)	
Operating pressure	Internal pilot air supply	[bar]	2 ... 10	3 ... 10
	External pilot air supply	[bar]	–0.9 ... +16	–0.9 ... +16
Pilot pressure		[bar]	2 ... 10	3 ... 10
Ambient temperature		[°C]	–5 ... +50	
Temperature of medium		[°C]	–5 ... +50	

Safety data		
Max. positive test pulse with 0 signal	[µs]	3700
Max. negative test pulse with 1 signal	[µs]	4600
Shock resistance		Shock test with severity level 2 to FN 942017-5 and EN 60068-2-27
Vibration resistance		Transport application test with severity level 1 to FN 942017-4 and EN 60068-2-6

Electrical data	
Electrical connection	Via N1 coil, to be ordered separately
Degree of protection to EN 60529	IP65

Materials	
Housing	Die-cast aluminium
Seals	HNBR, NBR
Note on materials	RoHS-compliant

Datasheet – Width 42 mm

Dimensions Download CAD data ➔ www.festo.com

5/2-way single solenoid valves

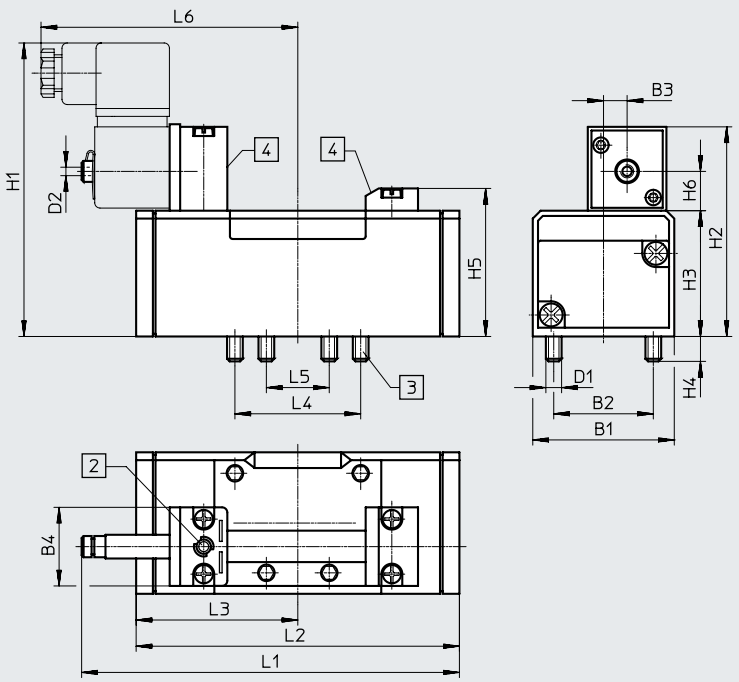

[2] Manual override
[3] Captive retaining screws
[4] Slot for inscription label

Type	B1	B2	B3	B4	D1	D2	H1	H2	H3	H4	H5	H6	L1	L2	L3	L4	L5	L6
MN1H-5/2- ...	42	28	6	30	M5	M5	106	74	38	9	46.5	15.3	117.5	87.6	43.8	36	18	89
MN1H-5/2- ... -FR- ...													128	98				

5/2-way double solenoid valves, 5/3-way valves

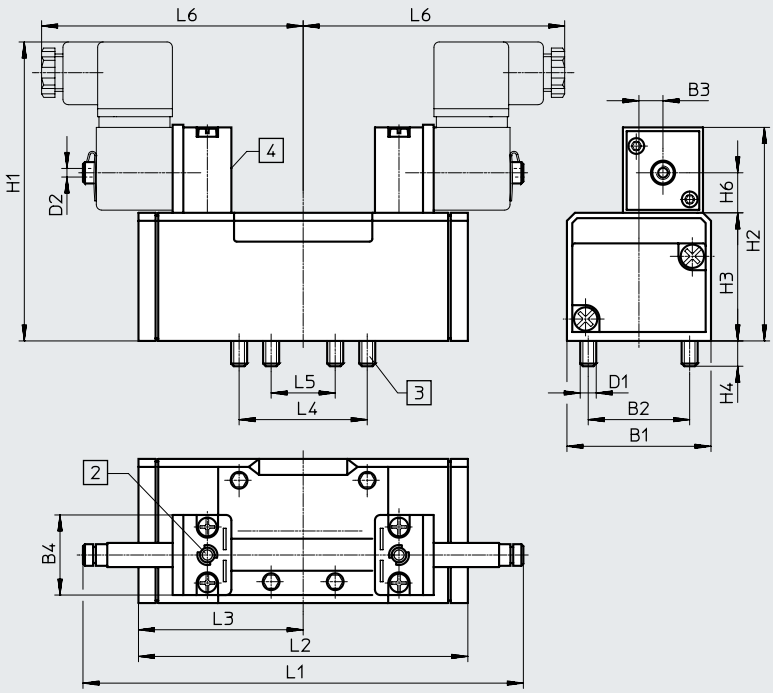

[2] Manual override
[3] Captive retaining screws
[4] Slot for inscription label

Type	B1	B2	B3	B4	D1	D2	H1	H2	H3	H4	H5	H6	L1	L2	L3	L4	L5	L6
JMN1H-5/2- ...	42	28	6	30	M5	M5	106	74	38	9	46.5	15.3	147.3	87.6	43.8	36	18	89
JMN1DH-5/2- ...														87.6				
MN1H-5/3...														108.4				

Ordering data – Width 42 mm

Ordering data – Valves with armature tube for solenoid coil MSN1[1)]

Circuit symbol	Description	Pilot air supply	Weight [g]	Part no.	Type
5/2-way valve					
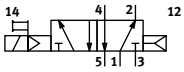	Pneumatic spring return	Internal	450	**159688**	**MN1H-5/2-D-1-C**
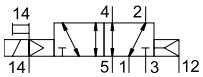	Pneumatic spring return	External	450	**159686**	**MN1H-5/2-D-1-S-C**
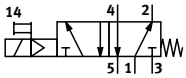	Mechanical spring return	Internal	450	**159687**	**MN1H-5/2-D-1-FR-C**
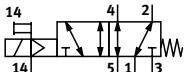	Mechanical spring return	External	450	**159716**	**MN1H-5/2-D-1-FR-S-C**
5/2-way valve, double solenoid					
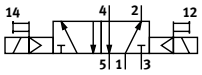	–	Internal	610	**159690**	**JMN1H-5/2-D-1-C**
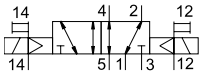	–	External	610	**159689**	**JMN1H-5/2-D-1-S-C**
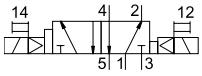	With dominant signal at 14	Internal	610	**159691**	**JMN1DH-5/2-D-1-C**
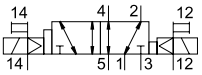	With dominant signal at 14	External	610	**159717**	**JMN1DH-5/2-D-1-S-C**
5/3-way valve					
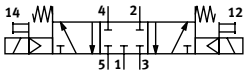	Normally closed, mechanical spring return	Internal	650	**159681**	**MN1H-5/3G-D-1-C**
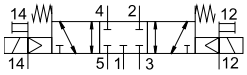	Normally closed, mechanical spring return	External	650	**159680**	**MN1H-5/3G-D-1-S-C**
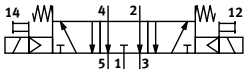	Exhausted in normal position, mechanical spring return	Internal	650	**159683**	**MN1H-5/3E-D-1-C**
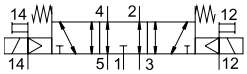	Exhausted in normal position, mechanical spring return	External	650	**159682**	**MN1H-5/3E-D-1-S-C**
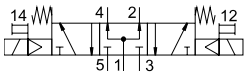	Normally open, mechanical spring return	Internal	650	**159685**	**MN1H-5/3B-D-1-C**
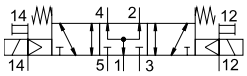	Normally open, mechanical spring return	External	650	**159684**	**MN1H-5/3B-D-1-S-C**

1) Solenoid coils → page 137

Datasheet – Width 52 mm

- Flow rate
  2300 l/min

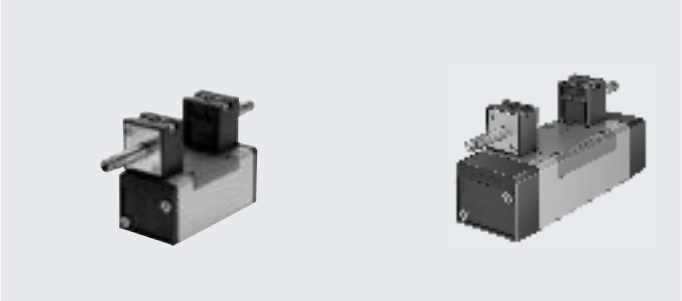

General technical data			
Design			Piston spool
Sealing principle			Soft
Actuation type			Electrical
Type of control			Piloted
Flow direction	With external pilot air supply		Reversible
	With internal pilot air supply		Not reversible
Exhaust air function			Can be throttled
Manual override			Non-detenting, detenting via accessory
Type of mounting			On sub-base, with through-hole and screw
Mounting position			Any
Nominal width		[mm]	11.5
Overlap			Positive overlap
Width		[mm]	52
Grid dimension		[mm]	56
Pneumatic connections			Sub-base size 2 to ISO 5599-1
Noise level		[dB (A)]	85
Conforms to standard			ISO 5599-1
Certification	With internal pilot air supply		c UL us - Recognized (OL)
Maritime classification[1)]			See certificate

1) Additional information: www.festo.com/catalogue/... ➔ Support/Downloads.

Flow rates				
Valve function		5/2-way valve, single solenoid	5/2-way valve, double solenoid	5/3-way valve
Standard nominal flow rate	[l/min]	2300		

Switching times [ms]					
		Switching time on	Switching time off	Switching time changeover	Switching time changeover (dominant)
5/2-way valve, single solenoid	MN1H-5/2-D-2-C	46	69	–	–
	MN1H-5/2-D-2-S-C	43	62	–	–
	MN1H-5/2-D-2-FR-C	24	62	–	–
	MN1H-5/2-D-2-FR-S-C	24	62	–	–
5/2-way valve, double solenoid	JMN1H-5/2-D-2-C	–	–	21	–
	JMN1H-5/2-D-2-S-C	–	–	21	–
	JMN1DH-5/2-D-2-C	–	–	24	21
	JMN1DH-5/2-D-2-S-C	–	–	24	21
5/3-way valve	MN1H-5/3G-D-2-C	33	82	–	–
	MN1H-5/3G-D-2-S-C	33	82	–	–
	MN1H-5/3E-D-2-C	36	84	–	–
	MN1H-5/3E-D-2-S-C	36	84	–	–
	MN1H-5/3B-D-2-C	35	78	–	–
	MN1H-5/3B-D-2-S-C	35	78	–	–

Datasheet – Width 52 mm

Operating and environmental conditions				
Reset method			Pneumatic spring	Mechanical spring
Operating medium			Compressed air to ISO 8573-1:2010 [7:4:4]	
Pilot medium			Compressed air to ISO 8573-1:2010 [7:4:4]	
Note on the operating/pilot medium			Lubricated operation possible (required for further operation)	
Operating pressure	Internal pilot air supply	[MPa]	0.2 ... 1	0.3 ... 1
		[bar]	2 ... 10	3 ... 10
	External pilot air supply	[MPa]	–0.09 ... +1.6	–0.09 ... +1.6
		[bar]	–0.9 ... +16	–0.9 ... +16
Pilot pressure		[bar]	2 ... 10	3 ... 10
Ambient temperature		[°C]	–5 ... +50	
Temperature of medium		[°C]	–5 ... +50	

Safety data		
Max. positive test pulse with 0 signal	[µs]	3700
Max. negative test pulse with 1 signal	[µs]	4600
Shock resistance		Shock test with severity level 2 to FN 942017-5 and EN 60068-2-27
Vibration resistance		Transport application test with severity level 1 to FN 942017-4 and EN 60068-2-6

Electrical data	
Electrical connection	Via N1 coil, to be ordered separately
Degree of protection to EN 60529	IP65

Materials	
Housing	Die-cast aluminium
Seals	HNBR, NBR
Note on materials	RoHS-compliant
LABS (PWIS) conformity	VDMA24364-B1/B2-L

Datasheet – Width 52 mm

Dimensions Download CAD data ➔ www.festo.com

5/2-way single solenoid valves

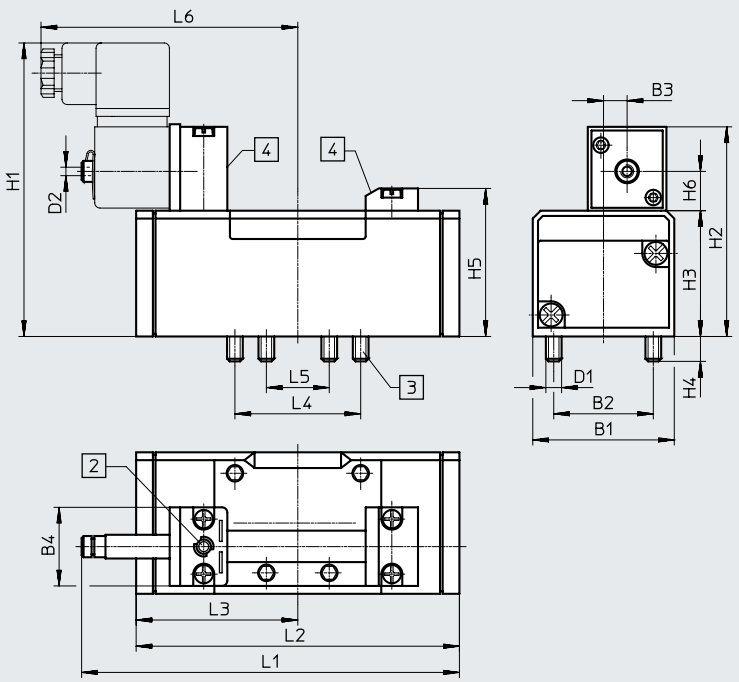

[2] Manual override
[3] Captive retaining screws
[4] Slot for inscription label

Type	B1	B2	B3	B4	D1	D2	H1	H2	H3	H4	H5	H6	L1	L2	L3	L4	L5	L6
MN1H-5/2- ...	54	38	9	30	M6	M5	116	84	48	9.5	56.5	15.3	147.6	123.4	61.7	48	24	98
MN1H-5/2- ... -FR- ...													161.5	140.7				

5/2-way double solenoid valves, 5/3-way valves

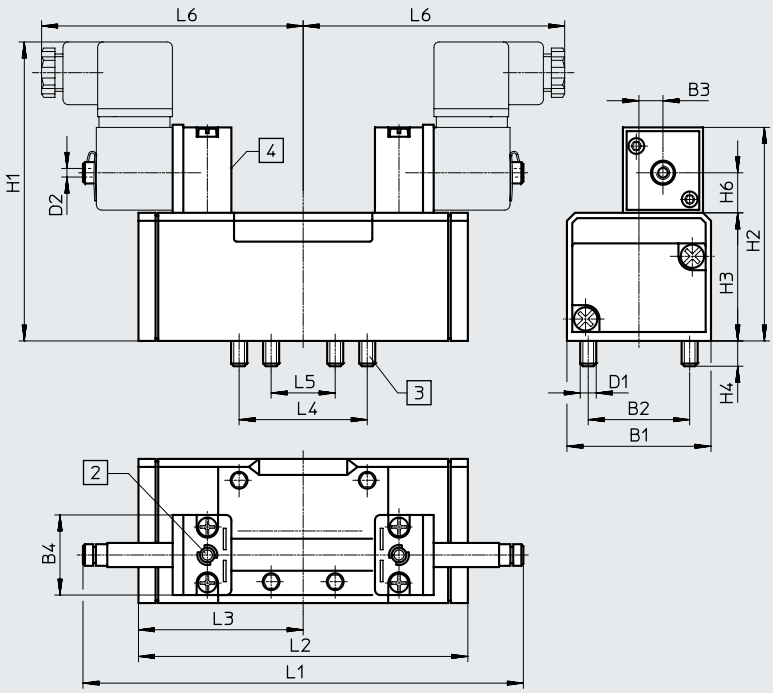

[2] Manual override
[3] Captive retaining screws
[4] Slot for inscription label

Type	B1	B2	B3	B4	D1	D2	H1	H2	H3	H4	H5	H6	L1	L2	L3	L4	L5	L6
JMN1H-5/2- ...	54	38	9	30	M6	M5	116	84	48	9.5	56.5	15.3	165	123.4	61.7	48	24	98
JMN1DH-5/2- ...														123.4	61.7			
MN1H-5/3...														158	79			

Ordering data – Width 52 mm

Ordering data – Valves with armature tube for solenoid coil MSN1[1)]

Circuit symbol	Description	Pilot air supply	Weight [g]	Part no.	Type
5/2-way valve, single solenoid					
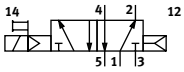	Pneumatic spring return	Internal	710	**159700**	**MN1H-5/2-D-2-C**
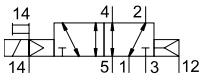	Pneumatic spring return	External	710	**159698**	**MN1H-5/2-D-2-S-C**
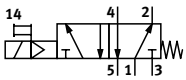	Mechanical spring return	Internal	710	**159699**	**MN1H-5/2-D-2-FR-C**
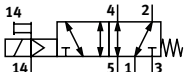	Mechanical spring return	External	710	**159718**	**MN1H-5/2-D-2-FR-S-C**
5/2-way valve, double solenoid					
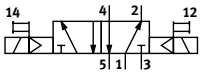	–	Internal	940	**159702**	**JMN1H-5/2-D-2-C**
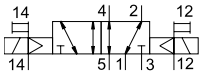	–	External	940	**159701**	**JMN1H-5/2-D-2-S-C**
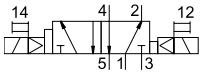	With dominant signal at 14	Internal	940	**159703**	**JMN1DH-5/2-D-2-C**
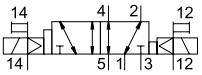	With dominant signal at 14	External	940	**159719**	**JMN1DH-5/2-D-2-S-C**
5/3-way valve					
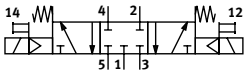	Normally closed, mechanical spring return	Internal	940	**159693**	**MN1H-5/3G-D-2-C**
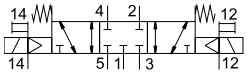	Normally closed, mechanical spring return	External	940	**159692**	**MN1H-5/3G-D-2-S-C**
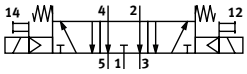	Exhausted in normal position, mechanical spring return	Internal	940	**159695**	**MN1H-5/3E-D-2-C**
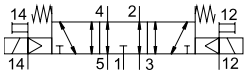	Exhausted in normal position, mechanical spring return	External	940	**159694**	**MN1H-5/3E-D-2-S-C**
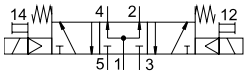	Normally open, mechanical spring return	Internal	940	**159697**	**MN1H-5/3B-D-2-C**
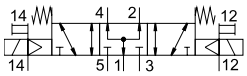	Normally open, mechanical spring return	External	940	**159696**	**MN1H-5/3B-D-2-S-C**

1) Solenoid coils → page 137

Datasheet – Width 65 mm

- Flow rate
  4600 l/min

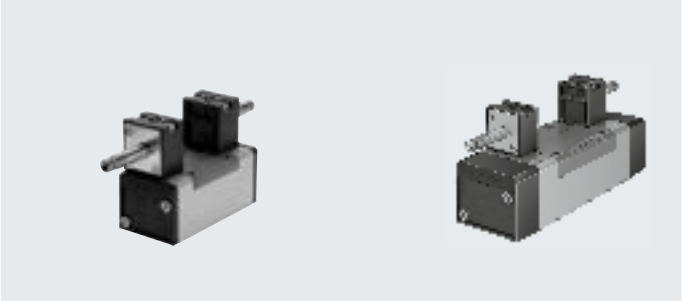

General technical data			
Design			Piston spool
Sealing principle			Soft
Actuation type			Electrical
Type of control			Piloted
Flow direction	With external pilot air supply		Reversible
	With internal pilot air supply		Not reversible
Exhaust air function			Can be throttled
Manual override			Non-detenting, detenting via accessory
Type of mounting			On sub-base, with through-hole and screw
Mounting position			Any
Nominal width		[mm]	14.5
Overlap			Positive overlap
Width		[mm]	65
Grid dimension		[mm]	71
Pneumatic connections			Sub-base size 3 to ISO 5599-1
Noise level		[dB (A)]	85
Conforms to standard			ISO 5599-1
Certification	With internal pilot air supply		c UL us - Recognized (OL)
Maritime classification[1)]			See certificate

1) Additional information: www.festo.com/catalogue/... → Support/Downloads.

Flow rates					
Valve function		5/2-way valve	5/3-way valve		
			Normally closed	Normally exhausted	Normally open
Standard nominal flow rate	[l/min]	4500	4100	4600	4000

Datasheet – Width 65 mm

Switching times [ms]		Switching time on	Switching time off	Switching time changeover	Switching time changeover (dominant)
5/2-way valve, single solenoid	MN1H-5/2-D-3-C	49	71	–	–
	MN1H-5/2-D-3-S-C	49	71	–	–
	MN1H-5/2-D-3-FR-C	33	74	–	–
	MN1H-5/2-D-3-FR-S-C	33	74	–	–
5/2-way valve, double solenoid	JMN1H-5/2-D-3-C	–	–	21	–
	JMN1H-5/2-D-3-S-C	–	–	21	–
	JMN1DH-5/2-D-3-C	–	–	24	21
	JMN1DH-5/2-D-3-S-C	–	–	24	21
5/3-way valve	MN1H-5/3G-D-3-C	33	82	–	–
	MN1H-5/3G-D-3-S-C	33	82	–	–
	MN1H-5/3E-D-3-C	36	84	–	–
	MN1H-5/3E-D-3-S-C	36	84	–	–
	MN1H-5/3B-D-3-C	35	78	–	–
	MN1H-5/3B-D-3-S-C	35	78	–	–

Operating and environmental conditions				
Reset method			Pneumatic spring	Mechanical spring
Operating medium			Compressed air to ISO 8573-1:2010 [7:4:4]	
Pilot medium			Compressed air to ISO 8573-1:2010 [7:4:4]	
Note on the operating/pilot medium			Lubricated operation possible (required for further operation)	
Operating pressure	Internal pilot air supply	[MPa]	0.2 ... 1	0.3 ... 1
		[bar]	2 ... 10	3 ... 10
	External pilot air supply	[MPa]	–0.09 ... +1.6	–0.09 ... +1.6
		[bar]	–0.9 ... +16	–0.9 ... +16
Pilot pressure		[bar]	2 ... 10	3 ... 10
Ambient temperature		[°C]	–5 ... +50	
Temperature of medium		[°C]	–5 ... +50	

Safety data		
Max. positive test pulse with 0 signal	[µs]	3700
Max. negative test pulse with 1 signal	[µs]	4600
Shock resistance		Shock test with severity level 2 to FN 942017-5 and EN 60068-2-27
Vibration resistance		Transport application test with severity level 1 to FN 942017-4 and EN 60068-2-6

Electrical data	
Electrical connection	Via N1 coil, to be ordered separately
Degree of protection to EN 60529	IP65

Materials	
Housing	Die-cast aluminium
Seals	HNBR, NBR
Note on materials	RoHS-compliant

Datasheet – Width 65 mm

Dimensions Download CAD data ➔ www.festo.com

5/2-way valves, single solenoid

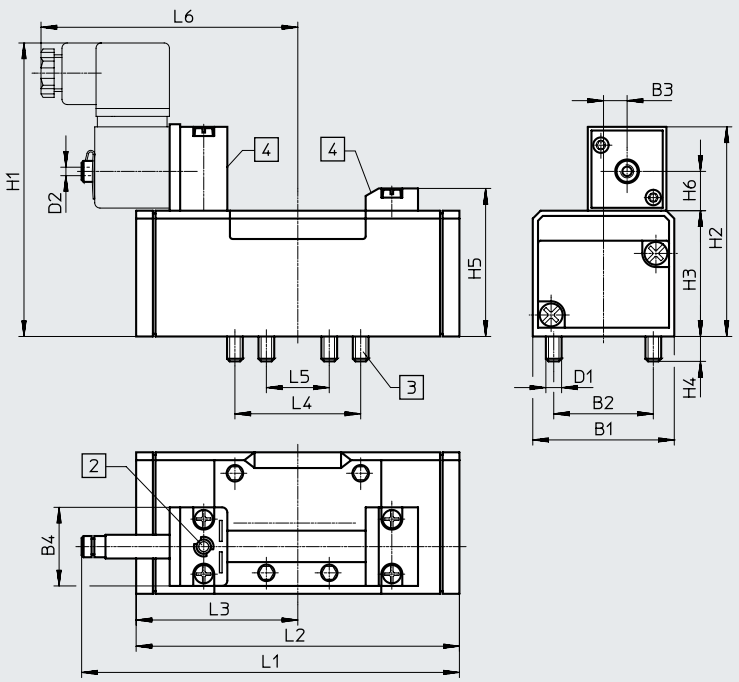

[2] Manual override
[3] Captive retaining screws
[4] Slot for inscription label

Type	B1	B2	B3	B4	D1	D2	H1	H2	H3	H4	H5	H6	L1	L2	L3	L4	L5	L6
MN1H-5/2- ...	65	48	12	30	M8	M5	123	87.3	55	12	63.5	15.3	169	145.4	72.7	64	32	109
MN1H-5/2- ... -FR- ...													184.8	164.7				

5/2-way double solenoid valves, 5/3-way valves

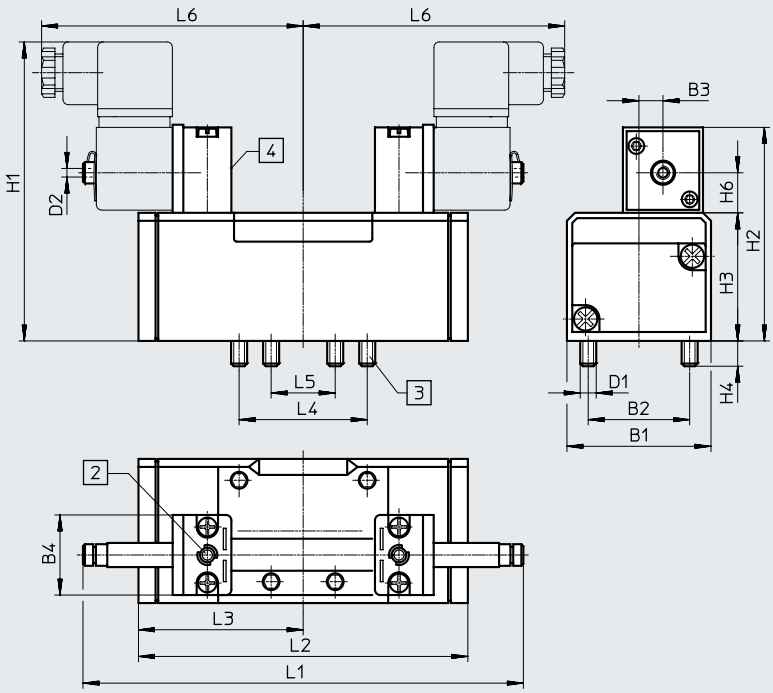

[2] Manual override
[3] Captive retaining screws
[4] Slot for inscription label

Type	B1	B2	B3	B4	D1	D2	H1	H2	H3	H4	H5	H6	L1	L2	L3	L4	L5	L6
JMN1H-5/2- ...	65	48	12	30	M8	M5	123	87.3	55	12	–	15.3	185.7	145.4	72.7	64	32	109
JMN1DH-5/2- ...											–			145.4	72.7			
MN1H-5/3...											63.5			184	92			

Ordering data – Width 65 mm

Ordering data – Valves with armature tube for solenoid coil MSN1[1)]

Circuit symbol	Description	Pilot air supply	Weight [g]	Part no.	Type
5/2-way valve, single solenoid					
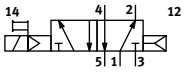	Pneumatic spring return	Internal	1000	**159712**	**MN1H-5/2-D-3-C**
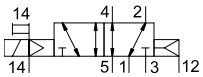	Pneumatic spring return	External	1000	**159710**	**MN1H-5/2-D-3-S-C**
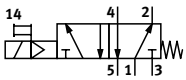	Mechanical spring return	Internal	1000	**159711**	**MN1H-5/2-D-3-FR-C**
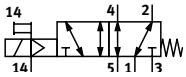	Mechanical spring return	External	1000	**160896**	**MN1H-5/2-D-3-FR-S-C**
5/2-way valve, double solenoid					
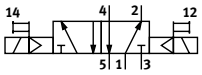	–	Internal	1090	**159714**	**JMN1H-5/2-D-3-C**
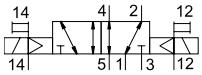	–	External	1090	**159713**	**JMN1H-5/2-D-3-S-C**
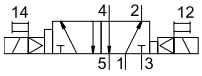	With dominant signal at 14	Internal	1090	**159715**	**JMN1DH-5/2-D-3-C**
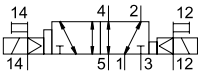	With dominant signal at 14	External	1090	**160897**	**JMN1DH-5/2-D-3-S-C**
5/3-way valve					
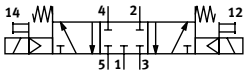	Normally closed, mechanical spring return	Internal	1170	**159705**	**MN1H-5/3G-D-3-C**
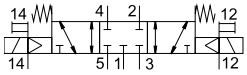	Normally closed, mechanical spring return	External	1170	**159704**	**MN1H-5/3G-D-3-S-C**
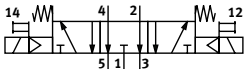	Exhausted in normal position, mechanical spring return	Internal	1170	**159707**	**MN1H-5/3E-D-3-C**
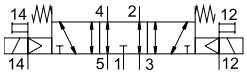	Exhausted in normal position, mechanical spring return	External	1170	**159706**	**MN1H-5/3E-D-3-S-C**
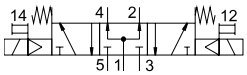	Normally open, mechanical spring return	Internal	1170	**159709**	**MN1H-5/3B-D-3-C**
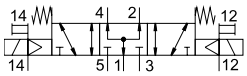	Normally open, mechanical spring return	External	1170	**159708**	**MN1H-5/3B-D-3-S-C**

1) Solenoid coils → page 137

Datasheet – Width 42 mm

- Flow rate
  1200 l/min

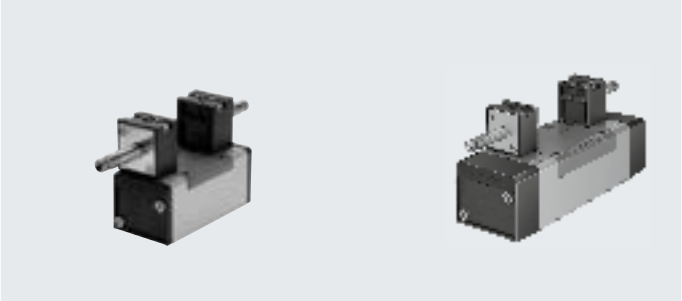

General technical data				
Type			MFH- ... -C, JMF- ... -C	MFH- ... -EX, JMF- ... -EX
Design			Piston spool	Piston spool
Sealing principle			Soft	Soft
Actuation type			Electrical	Electrical
Type of control			Piloted	Piloted
Flow direction	With external pilot air supply		Reversible	Reversible
	With internal pilot air supply		Not reversible	Not reversible
Exhaust air function			Can be throttled	Can be throttled
Manual override			Non-detenting, detenting via accessory	Non-detenting, detenting via accessory
Type of mounting			On sub-base, via through-hole	
Mounting position			Any	Any
Nominal width		[mm]	8	8
Overlap			Positive overlap	Positive overlap
Width		[mm]	42	42
Grid dimension		[mm]	43	43
Pneumatic connections			Sub-base size 1 to ISO 5599-1	Sub-base size 1 to ISO 5599-1
Noise level		[dB (A)]	85	85
Conforms to standard			ISO 5599-1	ISO 5599-1
Maritime classification[1)]			See certificate	–

1) Additional information: www.festo.com/catalogue/... ➔ Support/Downloads.

Flow rates					
Valve function			5/2-way valve, single solenoid	5/2-way valve, double solenoid	5/3-way valve
Standard nominal flow rate		[l/min]	1200		

Switching times [ms]					
			Switching time on	Switching time off	Switching time changeover	Switching time changeover (dominant)
5/2-way valve, single solenoid	MFH-5/2-...		23	35	–	–
	MFH-5/2-D-1-FR-...		16	45	–	–
5/2-way valve, double solenoid	JMFH-...		–	–	16	–
	JMFDH-...		–	–	16	13
5/3-way valve	MFH-5/3G-D-1-C		18	35	–	–
	MFH-5/3G-D-1-C-EX		18	35	–	–
	MFH-5/3G-D-1-S-C		18	36	–	–
	MFH-5/3G-D-1-S-C-EX		18	36	–	–
	MFH-5/3E-D-1-C		18	36	–	–
	MFH-5/3E-D-1-C-EX		18	36	–	–
	MFH-5/3E-D-1-S-C		18	36	–	–
	MFH-5/3E-D-1-S-C-EX		18	36	–	–
	MFH-5/3B-D-1-C		18	36	–	–
	MFH-5/3B-D-1-C-EX		18	36	–	–
	MFH-5/3B-D-1-S-C		18	36	–	–
	MFH-5/3B-D-1-S-C-EX		18	36	–	–

Datasheet – Width 42 mm

ATEX		
Type		MFH- ... -EX, JMFH- ... -EX, JMFDH- ... -EX
ATEX category for gas		II 2G
Type of (ignition) protection for gas		Ex h IIC T4 Gb
ATEX category for dust		II 2D
Type of (ignition) protection for dust		Ex h IIIC T105°C Db
Explosion ambient temperature	[°C]	–5 <= Ta <= +40
Explosion protection certification outside EU		EPL Db (GB)
		EPL Gb (GB)
CE marking (see declaration of conformity)[1]		To EU Explosion Protection Directive (ATEX)
UKCA marking (see declaration of conformity)[1]		To UK regulations for explosions

1) Additional information: www.festo.com/catalogue/... ➔ Support/Downloads.

Operating and environmental conditions				
Reset method			Pneumatic spring	Mechanical spring
Operating medium			Compressed air to ISO 8573-1:2010 [7:4:4]	
Pilot medium			Compressed air to ISO 8573-1:2010 [7:4:4]	
Note on the operating/pilot medium			Lubricated operation possible (required for further operation)	
Operating pressure	Internal pilot air supply	[bar]	2 ... 10	3 ... 10
	External pilot air supply	[bar]	–0.9 ... +16	–0.9 ... +16
Pilot pressure		[bar]	2 ... 10	3 ... 10
Ambient temperature		[°C]	–5 ... +40	
Temperature of medium		[°C]	–10 ... +60	
		[°C]	–5 ... +40 (MFH- ... -EX, JMFH- ... -EX, JMFDH- ... -EX)	

Safety data		
Max. positive test pulse with 0 signal	[µs]	2200
Max. negative test pulse with 1 signal	[µs]	3700
Shock resistance		Shock test with severity level 2 to FN 942017-5 and EN 60068-2-27
Vibration resistance		Transport application test with severity level 1 to FN 942017-4 and EN 60068-2-6

Electrical data	
Electrical connection	Via F coil, to be ordered separately
Degree of protection to EN 60529	IP65

Materials	
Housing	Die-cast aluminium
Seals	HNBR, NBR
Note on materials	RoHS-compliant

Datasheet – Width 42 mm

Dimensions Download CAD data ➔ www.festo.com

5/2-way valves, single solenoid

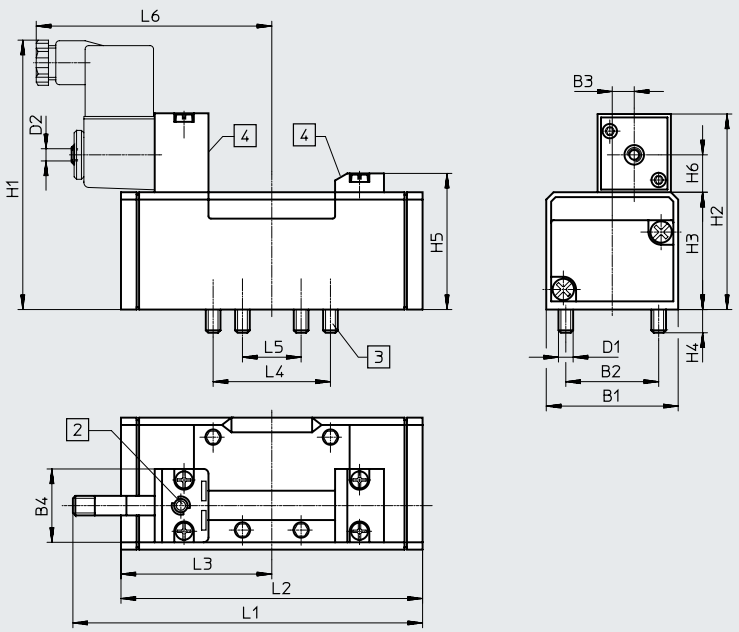

[2] Manual override
[3] Captive retaining screws
[4] Slot for inscription label

Type	B1	B2	B3	B4	D1	D2	H1	H2	H3	H4	H5	H6	L1	L2	L3	L4	L5	L6
MFH-5/2- ...	42	28	6	30	M5	M5	100	70.3	38	9	46.5	13.5	115	87.6	43.8	36	18	89
MFH-5/2- ... -FR- ...													125.6	98				

5/2-way double solenoid valves, 5/3-way valves

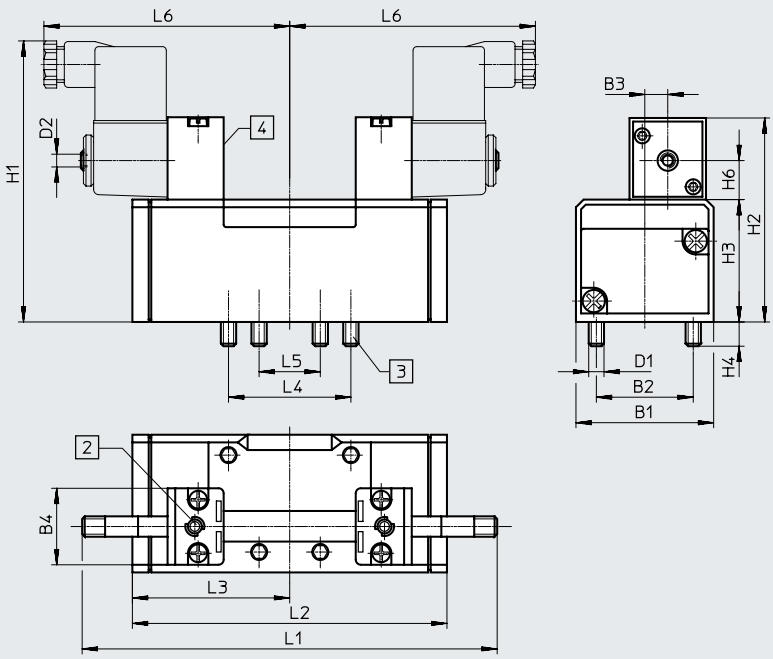

[2] Manual override
[3] Captive retaining screws
[4] Slot for inscription label

Type	B1	B2	B3	B4	D1	D2	H1	H2	H3	H4	H5	H6	L1	L2	L3	L4	L5	L6
JMFH-5/2- ...	42	28	6	30	M5	M5	100	70.3	38	9	–	13.5	142.6	87.6	43.8	36	18	89
JMFDH-5/2- ...														87.6	43.8			
MFH-5/3...														108.4	54.2			

Ordering data – Width 42 mm

Ordering data – Valves with armature tube for solenoid coil MSF[1)]

Circuit symbol	Description	Pilot air supply	Weight [g]		Part no.	Type
5/2-way valve, single solenoid						
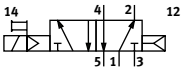	Pneumatic spring return	Internal	390	–	**150981**	**MFH-5/2-D-1-C**
				ATEX category ➔ page 39	**535954**	**MFH-5/2-D-1-C-EX**
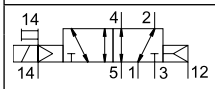	Pneumatic spring return	External	390	–	**152562**	**MFH-5/2-D-1-S-C**
				ATEX category ➔ page 39	**535957**	**MFH-5/2-D-1-S-C-EX**
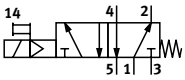	Mechanical spring return	Internal	390	–	**151016**	**MFH-5/2-D-1-FR-C**
				ATEX category ➔ page 39	**535960**	**MFH-5/2-D-1-FR-C-EX**
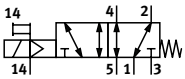	Mechanical spring return	External	390	–	**188510**	**MFH-5/2-D-1-FR-S-C**
5/2-way valve, double solenoid						
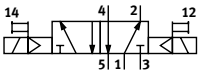	–	Internal	490	–	**150980**	**JMFH-5/2-D-1-C**
				ATEX category ➔ page 39	**535963**	**JMFH-5/2-D-1-C-EX**
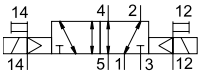	–	External	490	–	**152563**	**JMFH-5/2-D-1-S-C**
				ATEX category ➔ page 39	**535966**	**JMFH-5/2-D-1-S-C-EX**
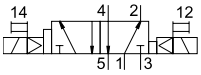	With dominant signal at 14	Internal	490	–	**151019**	**JMFDH-5/2-D-1-C**
				ATEX category ➔ page 39	**536071**	**JMFDH-5/2-D-1-C-EX**
5/3-way valve						
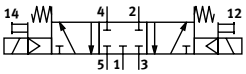	Normally closed, mechanical spring return	Internal	520	–	**150982**	**MFH-5/3G-D-1-C**
				ATEX category ➔ page 39	**535969**	**MFH-5/3G-D-1-C-EX**
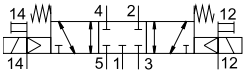	Normally closed, mechanical spring return	External	520	–	**152564**	**MFH-5/3G-D-1-S-C**
				ATEX category ➔ page 39	**535972**	**MFH-5/3G-D-1-S-C-EX**
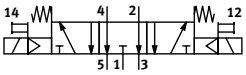	Normally exhausted, mechanical spring return	Internal	520	–	**150983**	**MFH-5/3E-D-1-C**
				ATEX category ➔ page 39	**535975**	**MFH-5/3E-D-1-C-EX**
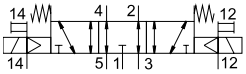	Normally exhausted, mechanical spring return	External	520	–	**152565**	**MFH-5/3E-D-1-S-C**
				ATEX category ➔ page 39	**535978**	**MFH-5/3E-D-1-S-C-EX**
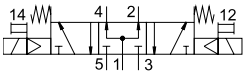	Normally open, mechanical spring return	Internal	520	–	**150984**	**MFH-5/3B-D-1-C**
				ATEX category ➔ page 39	**535981**	**MFH-5/3B-D-1-C-EX**
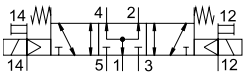	Normally open, mechanical spring return	External	520	–	**152566**	**MFH-5/3B-D-1-S-C**
				ATEX category ➔ page 39	**535984**	**MFH-5/3B-D-1-S-C-EX**

1) Solenoid coils ➔ page 137

Datasheet – Width 52 mm

- Flow rate
  2300 l/min

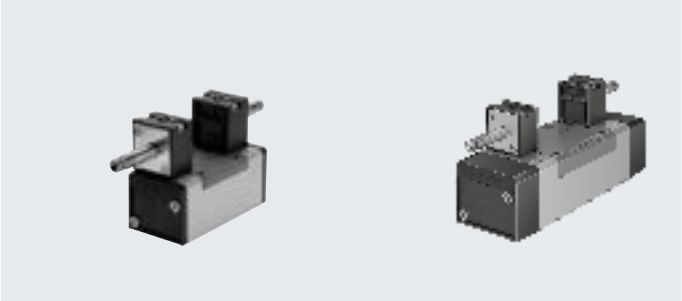

General technical data				
Type			MFH- ... -C, JMF- ... -C	MFH- ... -EX, JMF- ... -EX
Design			Piston spool	Piston spool
Sealing principle			Soft	Soft
Actuation type			Electrical	Electrical
Type of control			Piloted	Piloted
Flow direction	With external pilot air supply		Reversible	Reversible
	With internal pilot air supply		Not reversible	Not reversible
Exhaust air function			Can be throttled	Can be throttled
Manual override			Non-detenting, detenting via accessory	Non-detenting, detenting via accessory
Type of mounting			On sub-base, with through-hole and screw	
Mounting position			Any	Any
Nominal width		[mm]	11.5	11.5
Overlap			Positive overlap	Positive overlap
Width		[mm]	52	52
Grid dimension		[mm]	56	56
Pneumatic connections			Sub-base size 2 to ISO 5599-1	Sub-base size 2 to ISO 5599-1
Noise level		[dB (A)]	85	85
Conforms to standard			ISO 5599-1	ISO 5599-1
Maritime classification[1)]			See certificate	–

1) Additional information: www.festo.com/catalogue/... → Support/Downloads.

Flow rates					
Valve function			5/2-way valve, single solenoid	5/2-way valve, double solenoid	5/3-way valve
Standard nominal flow rate		[l/min]	2300		

Switching times [ms]						
			Switching time on	Switching time off	Switching time changeover	Switching time changeover (dominant)
5/2-way valve, single solenoid	MFH-5/2-...		48	71	–	–
	MFH-5/2-D-2-FR-...		27	73	–	–
5/2-way valve, double solenoid	JMFH-...		–	–	18	–
	JMFDH-...		–	–	18	18
5/3-way valve	MFH-5/3G-...		33	63	–	–
	MFH-5/3E-...		35	67	–	–
	MFH-5/3B-...		35	69	–	–

Datasheet – Width 52 mm

ATEX		
Type		MFH- ... -EX, JMFH- ... -EX, JMFDH- ... -EX
ATEX category for gas		II 2G
Type of (ignition) protection for gas		Ex h IIC T4 Gb
ATEX category for dust		II 2D
Type of (ignition) protection for dust		Ex h IIIC T105°C Db
Explosion ambient temperature	[°C]	–5 <= Ta <= +40
Explosion protection certification outside EU		EPL Db (GB)
		EPL Gb (GB)
CE marking (see declaration of conformity)[1]		To EU Explosion Protection Directive (ATEX)
UKCA marking (see declaration of conformity) [1]		To UK regulations for explosions

1) Additional information: www.festo.com/catalogue/... ➔ Support/Downloads.

Operating and environmental conditions				
Reset method			Pneumatic spring	Mechanical spring
Operating medium			Compressed air to ISO 8573-1:2010 [7:4:4]	
Pilot medium			Compressed air to ISO 8573-1:2010 [7:4:4]	
Note on the operating/pilot medium			Lubricated operation possible (required for further operation)	
Operating pressure	Internal pilot air supply	[MPa]	0.2 ... 1	0.3 ... 1
		[bar]	2 ... 10	3 ... 10
	External pilot air supply	[MPa]	–0.09 ... +1.6	–0.09 ... +1.6
		[bar]	–0.9 ... +16	–0.9 ... +16
Pilot pressure		[bar]	2 ... 10	3 ... 10
Ambient temperature		[°C]	–5 ... +40	
Temperature of medium		[°C]	–10 ... +60	

Safety data		
Max. positive test pulse with 0 signal	[µs]	2200
Max. negative test pulse with 1 signal	[µs]	3700
Shock resistance		Shock test with severity level 2 to FN 942017-5 and EN 60068-2-27
Vibration resistance		Transport application test with severity level 1 to FN 942017-4 and EN 60068-2-6

Electrical data	
Electrical connection	Via F coil, to be ordered separately
Degree of protection to EN 60529	IP65

Materials	
Housing	Die-cast aluminium
Seals	HNBR, NBR
Note on materials	RoHS-compliant
LABS (PWIS) conformity	VDMA24364-B1/B2-L

Datasheet – Width 52 mm

Dimensions Download CAD data ➔ www.festo.com

5/2-way valve, single solenoid

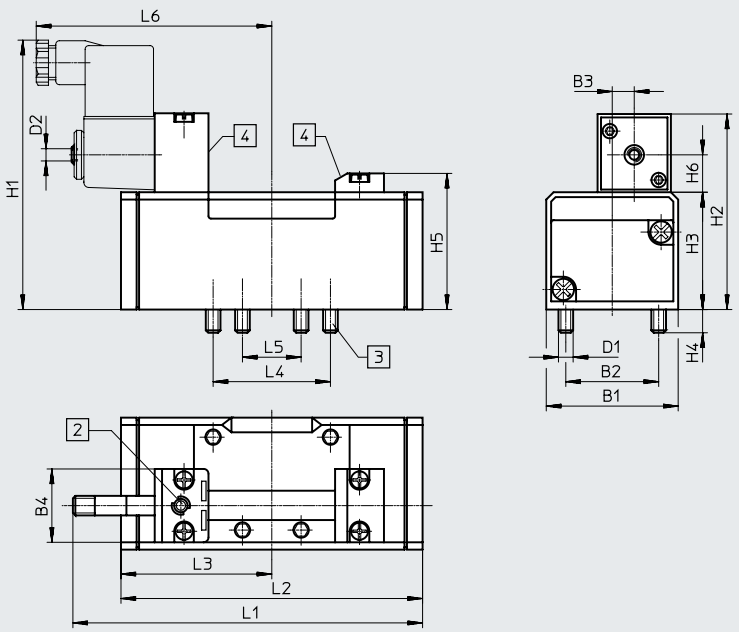

[2] Manual override
[3] Captive retaining screws
[4] Slot for inscription label

Type	B1	B2	B3	B4	D1	D2	H1	H2	H3	H4	H5	H6	L1	L2	L3	L4	L5	L6
MFH-5/2- ...	54	38	9	30	M6	M5	110	80.3	48	9.5	56.5	13.5	142	123.4	61.7	48	24	98
MFH-5/2- ... -FR- ...													159.4	140.7				

5/2-way double solenoid valves, 5/3-way valves

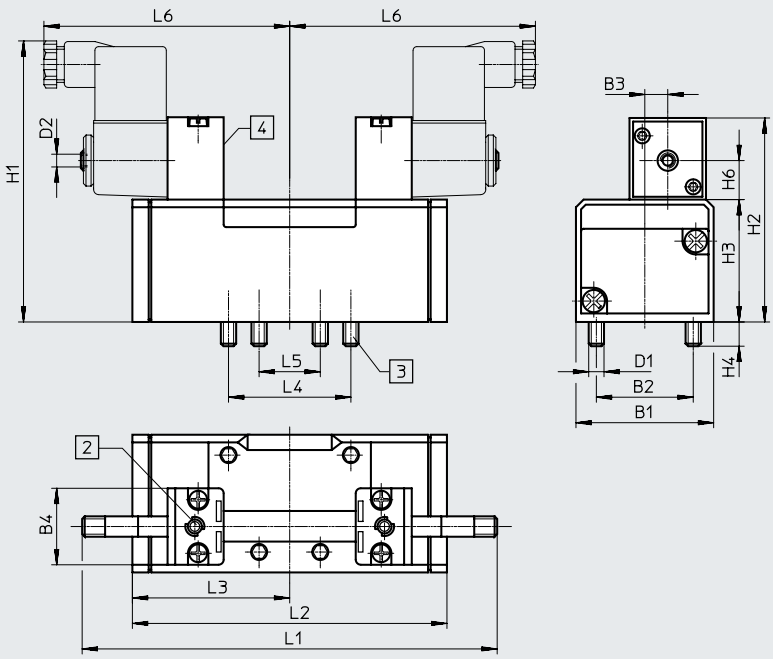

[2] Manual override
[3] Captive retaining screws
[4] Slot for inscription label

Type	B1	B2	B3	B4	D1	D2	H1	H2	H3	H4	H5	H6	L1	L2	L3	L4	L5	L6
JMFH-5/2- ...	54	38	9	30	M6	M5	110	80.3	48	9.5	–	13.5	160.4	123.4	61.7	48	24	97
JMFDH-5/2- ...													160.4	123.4	61.7			97
MFH-5/3...													160	158	79			98

Ordering data – Width 52 mm

Ordering data – Valves with armature tube for solenoid coil MSF[1)]

Circuit symbol	Description	Pilot air supply	Weight [g]		Part no.	Type
5/2-way valve, single solenoid						
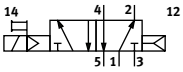	Pneumatic spring return	Internal	650	–	**151851**	**MFH-5/2-D-2-C**
				ATEX category ➔ page 43	**535955**	**MFH-5/2-D-2-C-EX**
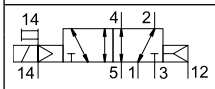	Pneumatic spring return	External	650	–	**151022**	**MFH-5/2-D-2-S-C**
				ATEX category ➔ page 43	**535958**	**MFH-5/2-D-2-S-C-EX**
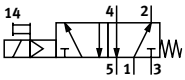	Mechanical spring return	Internal	650	–	**151709**	**MFH-5/2-D-2-FR-C**
				ATEX category ➔ page 43	**535961**	**MFH-5/2-D-2-FR-C-EX**
5/2-way valve, double solenoid						
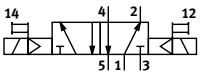	–	Internal	820	–	**151852**	**JMFH-5/2-D-2-C**
				ATEX category ➔ page 43	**535964**	**JMFH-5/2-D-2-C-EX**
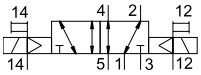	–	External	820	–	**151023**	**JMFH-5/2-D-2-S-C**
				ATEX category ➔ page 43	**535967**	**JMFH-5/2-D-2-S-C-EX**
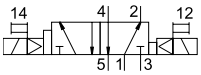	With dominant signal at 14	Internal	820	–	**151853**	**JMFDH-5/2-D-2-C**
				ATEX category ➔ page 43	**536072**	**JMFDH-5/2-D-2-C-EX**
5/3-way valve						
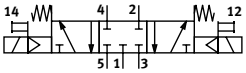	Normally closed, mechanical spring return	Internal	820	–	**151854**	**MFH-5/3G-D-2-C**
				ATEX category ➔ page 43	**535970**	**MFH-5/3G-D-2-C-EX**
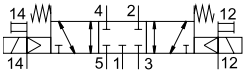	Normally closed, mechanical spring return	External	820	–	**151024**	**MFH-5/3G-D-2-S-C**
				ATEX category ➔ page 43	**535973**	**MFH-5/3G-D-2-S-C-EX**
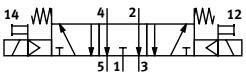	Normally exhausted, mechanical spring return	Internal	820	–	**151855**	**MFH-5/3E-D-2-C**
				ATEX category ➔ page 43	**535976**	**MFH-5/3E-D-2-C-EX**
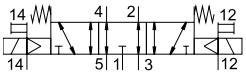	Normally exhausted, mechanical spring return	External	820	–	**151025**	**MFH-5/3E-D-2-S-C**
				ATEX category ➔ page 43	**535979**	**MFH-5/3E-D-2-S-C-EX**
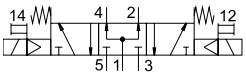	Normally open, mechanical spring return	Internal	820	–	**151856**	**MFH-5/3B-D-2-C**
				ATEX category ➔ page 43	**535982**	**MFH-5/3B-D-2-C-EX**
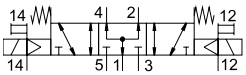	Normally open, mechanical spring return	External	820	–	**151026**	**MFH-5/3B-D-2-S-C**
				ATEX category ➔ page 43	**535985**	**MFH-5/3B-D-2-S-C-EX**

1) Solenoid coils ➔ page 137

Datasheet – Width 65 mm

- Flow rate
  Up to 4600 l/min

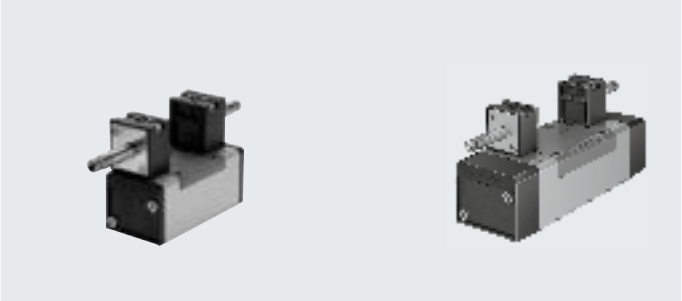

General technical data			
Type		MFH- ... -C, JMF- ... -C	MFH- ... -EX, JMF- ... -EX
Design		Piston spool	Piston spool
Sealing principle		Soft	Soft
Actuation type		Electrical	Electrical
Type of control		Piloted	Piloted
Flow direction	With external pilot air supply	Reversible	Reversible
	With internal pilot air supply	Not reversible	Not reversible
Exhaust air function		Can be throttled	Can be throttled
Manual override		Non-detenting, detenting via accessory	Non-detenting, detenting via accessory
Type of mounting		On sub-base, with through-hole and screw	
Mounting position		Any	Any
Nominal width	[mm]	14.5	14.5
Overlap		Positive overlap	Positive overlap
Width	[mm]	65	65
Grid dimension	[mm]	71	71
Pneumatic connections		Sub-base size 3 to ISO 5599-1	Sub-base size 3 to ISO 5599-1
Noise level	[dB (A)]	85	85
Conforms to standard		ISO 5599-1	ISO 5599-1
Maritime classification[1)]		See certificate	–

1) Additional information: www.festo.com/catalogue/... → Support/Downloads.

Flow rates					
Valve function		5/2-way valve	5/3-way valve		
			Normally closed	Normally exhausted	Normally open
Standard nominal flow rate	[l/min]	4500	4100	4600	4000

Switching times [ms]					
		Switching time on	Switching time off	Switching time changeover	Switching time changeover (dominant)
5/2-way valve, single solenoid	MFH-5/2-...	60	66	–	–
	MFH-5/2-D-1-FR-...	28	79	–	–
5/2-way valve, double solenoid	JMFH-...	–	–	18	–
	JMFDH-...	–	–	18	18
5/3-way valve	MFH-5/3G-...	36	77	–	–
	MFH-5/3E-...	37	78	–	–
	MFH-5/3B-...	36	75	–	–

Datasheet – Width 65 mm

ATEX		
Type		MFH- ... -EX, JMFH- ... -EX, JMFDH- ... -EX
ATEX category for gas		II 2G
Type of (ignition) protection for gas		Ex h IIC T4 Gb
ATEX category for dust		II 2D
Type of (ignition) protection for dust		Ex h IIIC T105°C Db
Explosion ambient temperature	[°C]	–5 <= Ta <= +40
Explosion protection certification outside EU		EPL Db (GB)
		EPL Gb (GB)
CE marking (see declaration of conformity)[1]		To EU Explosion Protection Directive (ATEX)
UKCA marking (see declaration of conformity) [1]		To UK regulations for explosions

1) Additional information: www.festo.com/catalogue/... ➔ Support/Downloads.

Operating and environmental conditions				
Reset method			Pneumatic spring	Mechanical spring
Operating medium			Compressed air to ISO 8573-1:2010 [7:4:4]	
Pilot medium			Compressed air to ISO 8573-1:2010 [7:4:4]	
Note on the operating/pilot medium			Lubricated operation possible (required for further operation)	
Operating pressure	Internal pilot air supply	[MPa]	0.2 ... 1	0.3 ... 1
		[bar]	2 ... 10	3 ... 10
	External pilot air supply	[MPa]	–0.09 ... +1.6	–0.09 ... +1.6
		[bar]	–0.9 ... +16	–0.9 ... +16
Pilot pressure		[bar]	2 ... 10	3 ... 10
Ambient temperature		[°C]	–5 ... +40	
Temperature of medium		[°C]	–10 ... +60	

Safety data		
Max. positive test pulse with 0 signal	[µs]	2200
Max. negative test pulse with 1 signal	[µs]	3700
Shock resistance		Shock test with severity level 2 to FN 942017-5 and EN 60068-2-27
Vibration resistance		Transport application test with severity level 1 to FN 942017-4 and EN 60068-2-6

Electrical data	
Electrical connection	Via F coil, to be ordered separately
Degree of protection to EN 60529	IP65

Materials	
Housing	Die-cast aluminium
Seals	HNBR, NBR
Note on materials	RoHS-compliant

Datasheet – Width 65 mm

Dimensions Download CAD data ➔ www.festo.com

5/2-way valve, single solenoid

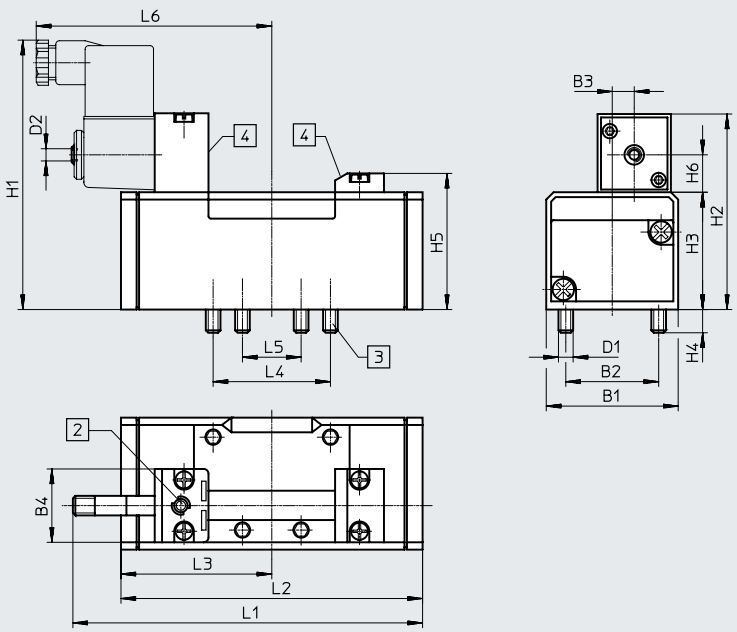

[2] Manual override
[3] Captive retaining screws
[4] Slot for inscription label

Type	B1	B2	B3	B4	D1	D2	H1	H2	H3	H4	H5	H6	L1	L2	L3	L4	L5	L6
MFH-5/2- ...	65	48	12	30	M8	M5	117	87.3	55	12	63.5	13.5	163	145.4	72.7	64	32	109
MFH-5/2- ... -FR- ...													182	164.7				

5/2-way double solenoid valves, 5/3-way valves

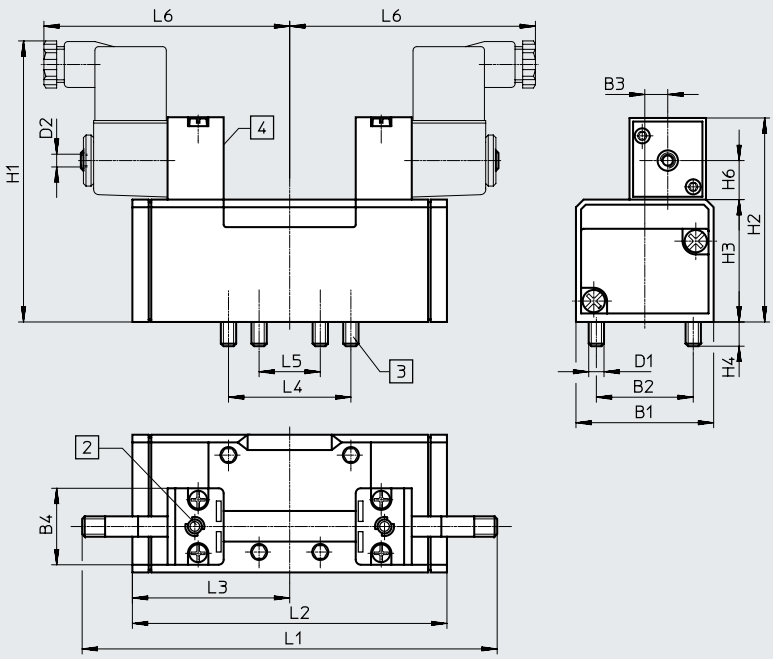

[2] Manual override
[3] Captive retaining screws
[4] Slot for inscription label

Type	B1	B2	B3	B4	D1	D2	H1	H2	H3	H4	H5	H6	L1	L2	L3	L4	L5	L6
JMFH-5/2- ...	65	48	12	30	M8	M5	117	87.3	55	12	–	13.5	181	145.4	72.7	64	32	109
JMFDH-5/2- ...														145.4	72.7			
MFH-5/3...														184	92			

Ordering data – Width 65 mm

Ordering data – Valves with armature tube for solenoid coil MSF[1)]

Circuit symbol	Description	Pilot air supply	Weight [g]		Part no.	Type
5/2-way valve, single solenoid						
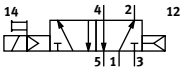	Pneumatic spring return	Internal	960	–	**151870**	**MFH-5/2-D-3-C**
				ATEX category ➔ page 47	**535956**	**MFH-5/2-D-3-C-EX**
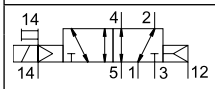	Pneumatic spring return	External	960	–	**151032**	**MFH-5/2-D-3-S-C**
				ATEX category ➔ page 47	**535959**	**MFH-5/2-D-3-S-C-EX**
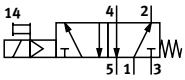	Mechanical spring return	Internal	960	–	**151711**	**MFH-5/2-D-3-FR-C**
				ATEX category ➔ page 47	**535962**	**MFH-5/2-D-3-FR-C-EX**
5/2-way valve, double solenoid						
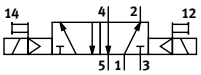	–	Internal	1060	–	**151871**	**JMFH-5/2-D-3-C**
				ATEX category ➔ page 47	**535965**	**JMFH-5/2-D-3-C-EX**
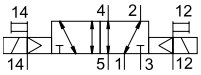	–	External	1060	–	**151033**	**JMFH-5/2-D-3-S-C**
				ATEX category ➔ page 47	**535968**	**JMFH-5/2-D-3-S-C-EX**
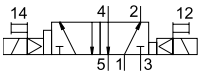	With dominant signal at 14	Internal	1060	–	**151872**	**JMFDH-5/2-D-3-C**
				ATEX category ➔ page 47	**536073**	**JMFDH-5/2-D-3-C-EX**
5/3-way valve						
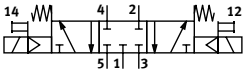	Normally closed, mechanical spring return	Internal	1040	–	**151873**	**MFH-5/3G-D-3-C**
				ATEX category ➔ page 47	**535971**	**MFH-5/3G-D-3-C-EX**
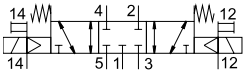	Normally closed, mechanical spring return	External	1040	–	**151034**	**MFH-5/3G-D-3-S-C**
				ATEX category ➔ page 47	**535974**	**MFH-5/3G-D-3-S-C-EX**
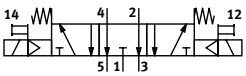	Normally exhausted, mechanical spring return	Internal	1040	–	**151874**	**MFH-5/3E-D-3-C**
				ATEX category ➔ page 47	**535977**	**MFH-5/3E-D-3-C-EX**
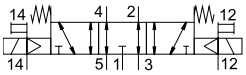	Normally exhausted, mechanical spring return	External	1040	–	**151035**	**MFH-5/3E-D-3-S-C**
				ATEX category ➔ page 47	**535980**	**MFH-5/3E-D-3-S-C-EX**
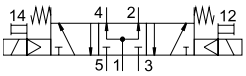	Normally open, mechanical spring return	Internal	1040	–	**151875**	**MFH-5/3B-D-3-C**
				ATEX category ➔ page 47	**535983**	**MFH-5/3B-D-3-C-EX**
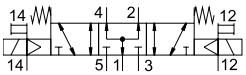	Normally open, mechanical spring return	External	1040	–	**151036**	**MFH-5/3B-D-3-S-C**
				ATEX category ➔ page 47	**535986**	**MFH-5/3B-D-3-S-C-EX**

1) Solenoid coils ➔ page 137

Datasheet – Width 38 mm

- Flow rate
  Max. 1343 l/min

- Voltage
  24 V DC

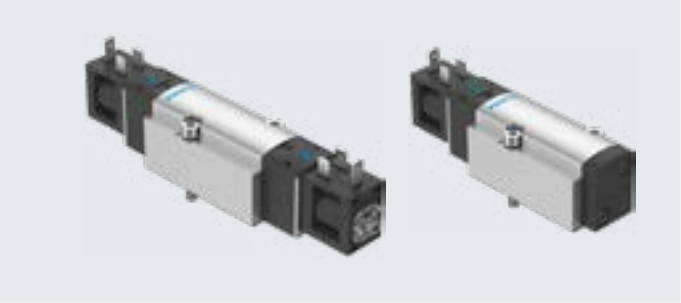

General technical data					
Valve function		5/2-way, single solenoid		5/2-way, double solenoid	5/3-way, exhausted
Reset method		Pneumatic spring	Mechanical spring	–	Mechanical spring
Design		Piston spool with sealing ring			
Overlap		Negative overlap			
Sealing principle		Soft			
Actuation type		Electrical			
Type of control		Piloted			
Pilot air supply		Internal			
Flow direction		Not reversible			
Exhaust air function		Can be throttled			
Manual override		Non-detenting; detenting			
Type of mounting		On sub-base			
Mounting position		Any			
Nominal width	[mm]	6.3			
Valve size	[mm]	42			
Width	[mm]	38			
Grid dimension	[mm]	43			
Pneumatic port	1, 2, 3, 4, 5	Sub-base size 1 to ISO 5599-1			
Port for venting hole		Not ducted			
b value		0.26	0.26	0.26	0.26
C value	[l/sbar]	5.87	5.88	5.91	5.63
Maximum assembly torque for valve mounting	[Nm]	5			
Product weight	[g]	321	324	400	402
Conforms to standard		ISO 5599-1			
ISO code		151	152	155	157

Flow rates					
Valve function		5/2-way, single solenoid		5/2-way, double solenoid	5/3-way, exhausted
Reset method		Pneumatic spring	Mechanical spring	–	Mechanical spring
Flow rate of valve	[l/min]	1342	1343	1341	1289
Flow rate of valve on individual sub-base	[l/min]	1341	1342	1341	1289
Flow rate of pneumatically linked valve	[l/min]	1313	1313	1313	1283
Standard nominal flow rate	[l/min]	1200	1200	1200	1200

Switching times					
Valve function		5/2-way, single solenoid		5/2-way, double solenoid	5/3-way, exhausted
Reset method		Pneumatic spring	Mechanical spring	–	Mechanical spring
Switching time on	[ms]	17.3	19.9	–	12.4
Switching time off	[ms]	20.7	20.9	–	37.4
Switching time changeover	[ms]	–	–	10.5	18.9

Datasheet – Width 38 mm

Safety data		
Max. positive test pulse with 0 signal	[µs]	2500
Max. negative test pulse with 1 signal	[µs]	1100
Shock resistance		Shock test with severity level 2 to FN 942017-5 and EN 60068-2-27
Vibration resistance		Transport application test with severity level 2 to FN 942017-4 and EN 60068-2-6

Operating and environmental conditions		
Operating medium		Compressed air to ISO 8573-1:2010 [7:4:4]
Pilot medium		Compressed air to ISO 8573-1:2010 [7:4:4]
Note on the operating/pilot medium		Lubricated operation possible (required for further operation)
Operating pressure	[MPa]	0.3 ... 0.8
	[bar]	3 ... 8
Ambient temperature	[°C]	–5 ... +50
Temperature of medium	[°C]	–5 ... +50
Corrosion resistance class CRC[1)]		1 - Low corrosion stress

1) For additional information www.festo.com/x/topic/crc

Electrical data		
Electrical connection		Form B
		To industry standard (11 mm)
Nominal operating voltage	[V DC]	24
Characteristic coil data		24 V DC: 3.3 W
Permissible voltage fluctuations	[%]	±10
Duty cycle	[%]	100
Degree of protection		IP65
		With plug socket
		To IEC 60529
Signal status indication		Via accessories

Materials	
Housing	Wrought aluminium alloy
Seals	NBR, HNBR
Piston spool	Wrought aluminium alloy
Screws	Galvanised steel
Note on materials	RoHS-compliant
LABS (PWIS) conformity	VDMA24364 zone III

Datasheet – Width 38 mm

Dimensions Download CAD data ➔ www.festo.com

5/2-way valve, single solenoid

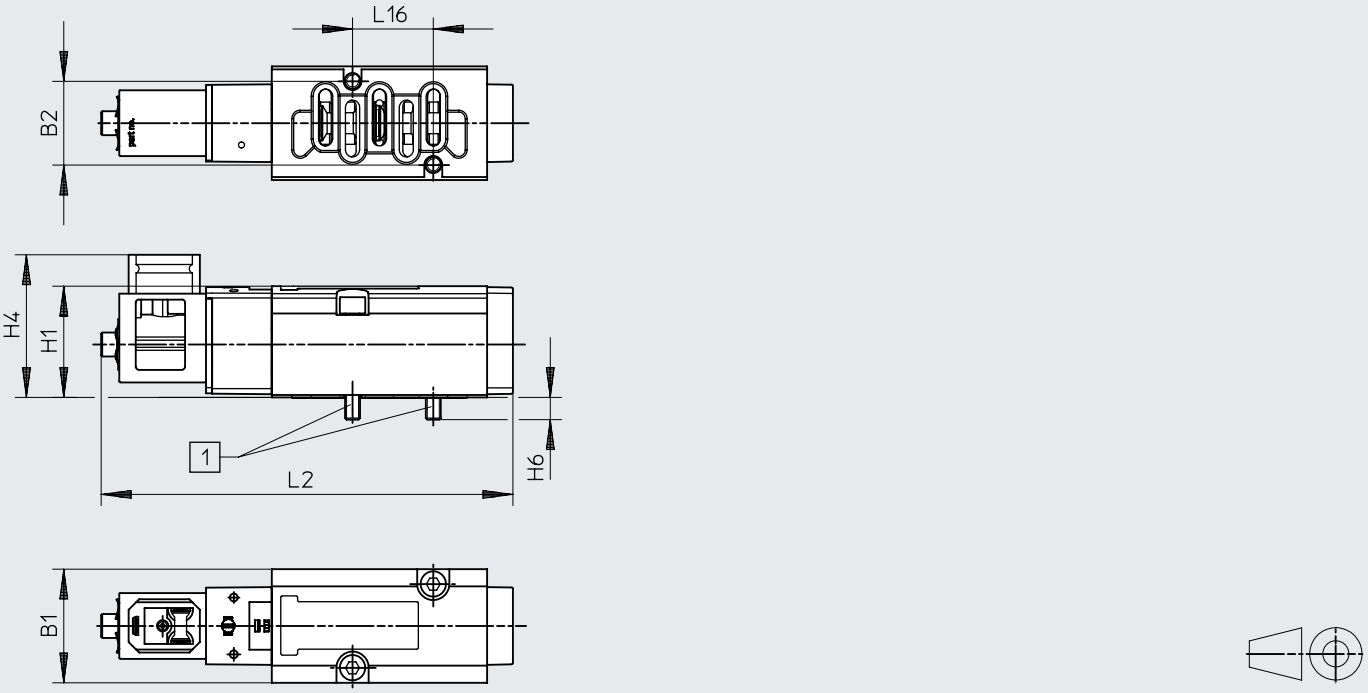

[1] Retaining screws M5

Type	B1	B2	H1	H4	H6	L2	L16
VSVA-BK-M52...	38	28	37.2	47.7	7.5	137.6	27

Datasheet – Width 38 mm

Dimensions Download CAD data ➔ www.festo.com

5/2-way double solenoid valve and 5/3-way solenoid valve

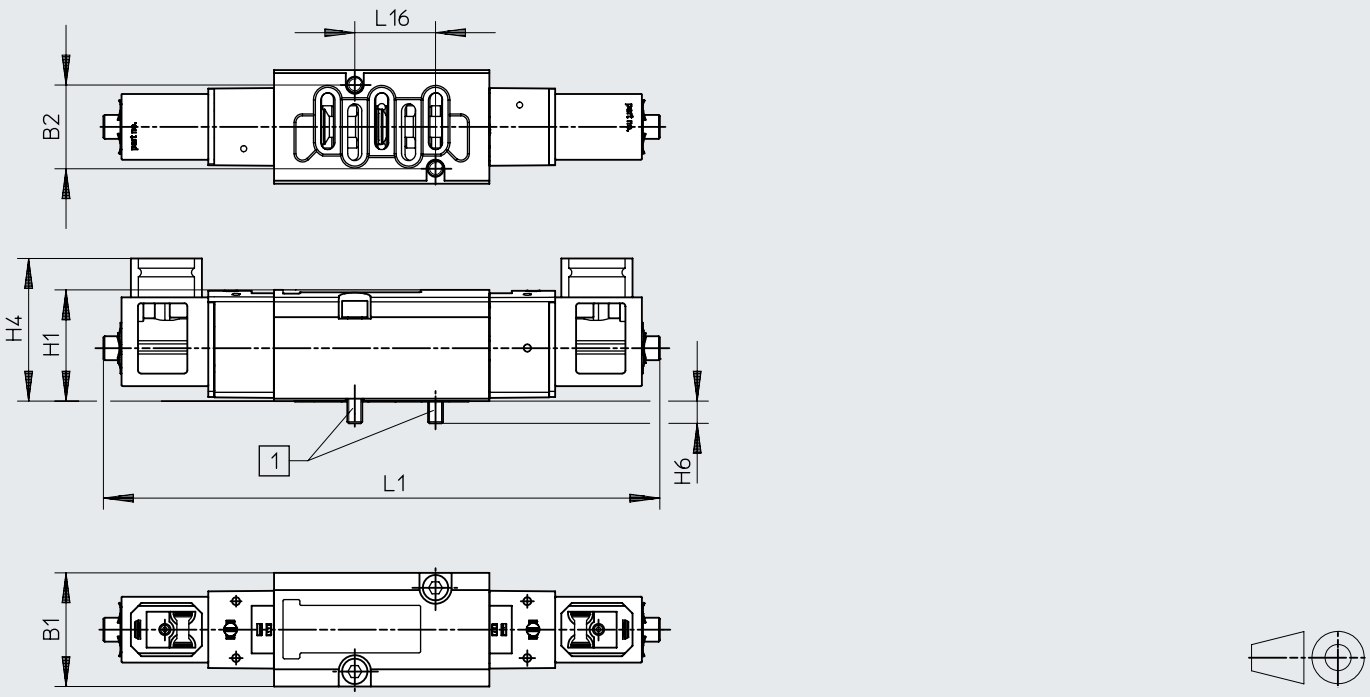

[1] Retaining screws M5

Type	B1	B2	H1	H4	H6	L1	L16
VSVA-BK-B52...	38	28	37.2	47.7	7.5	186.1	27
VSVA-BK-P53...							

Ordering data

Code	Circuit symbol			Part no.	Type
5/2-way valve, single solenoid					
–	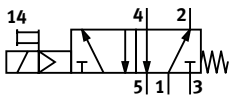	Mechanical spring	Internal pilot air supply	**8166594**	**VSVA-BK-M52-MD-D1-1B2**
–	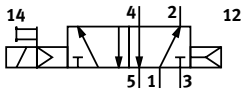	Pneumatic spring	Internal pilot air supply	**8166593**	**VSVA-BK-M52-AD-D1-1B2**
5/2-way valve, double solenoid					
–	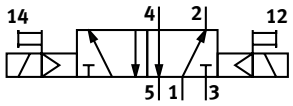	–	Internal pilot air supply	**8166592**	**VSVA-BK-B52-D-D1-1B2**
5/3-way solenoid valve					
–	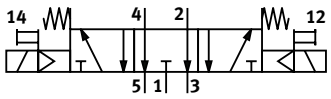	Normally exhausted	Internal pilot air supply	**8166595**	**VSVA-BK-P53E-D-D1-1B2**

Datasheet – Width 42 mm

- Flow rate
  Up to 1300 l/min

- Voltage
  24 V DC

General technical data		
Design		Piston spool
Sealing principle		Soft
Actuation type		Electrical
Type of control		Piloted
Exhaust air function		Can be throttled, externally or via vertically stacked throttle plate
Manual override		Non-detenting, detenting
Type of mounting		On sub-base
Mounting position		Any
Nominal width	[mm]	11
Overlap		Positive overlap
Width	[mm]	42
Grid dimension	[mm]	43
Pneumatic connections		Sub-base size 1 to ISO 5599-1
Conforms to standard		ISO 5599-1
Certification		c UL us – Recognized (OL)

Flow rates Valve function		2/2-way valve	3/2-way valve	5/2-way valve	5/3-way valve
Standard nominal flow rate	[l/min]	1300	1100	1300	1300
Valve		1600	1600	2000	1900
Valve on individual sub-base		1400	1200	1400	1400
Valve, pneumatically linked		1300	1100	1300	1400

Switching times [ms]		Switching time on	Switching time off	Switching time changeover	Switching time changeover (dominant)
2x 2/2-way valve	VSVA-B-T22...	20	38	–	–
2x 3/2-way valve	VSVA-B-T32...	20	38	–	–
2x 3/2-way valve, reversible	VSVA-B-T32...	34	28	–	–
5/2-way valve, single solenoid	VSVA-B-M52-A...	27	45	–	–
	VSVA-B-M52-M...	22	60	–	–
5/2-way valve, double solenoid	VSVA-B-B52...	–	–	16	–
	VSVA-B-D52...	–	–	–	19
5/3-way valve	VSVA-B-P53...	22	65	–	–

Datasheet – Width 42 mm

Operating and environmental conditions							
Valve function			2x 2/2-way valve	2x 3/2-way valve	2x 3/2-way valve, reversible	5/2-way valve	5/3-way valve
Operating medium			Compressed air to ISO 8573-1:2010 [7:4:4]				
Pilot medium			Compressed air to ISO 8573-1:2010 [7:4:4]				
Note on the operating/pilot medium			Lubricated operation possible (required for further operation)				
Operating pressure	Internal pilot air supply	[MPa]	0.3 ... 1	0.3 ... 1	–	0.3 ... 1	0.3 ... 1
		[bar]	3 ... 10	3 ... 10	–	3 ... 10	3 ... 10
	External pilot air supply	[MPa]	0.3 ... 1	0.3 ... 1	–0.09 ... +1	–0.09 ... +1.6	–0.09 ... +1.6
		[bar]	3 ... 10	3 ... 10	–0.9 ... +10	–0.9 ... +16	–0.9 ... +16
Pilot pressure		[MPa]	0.3 ... 1				
		[bar]	3 ... 10				
Ambient temperature		[°C]	–5 ... +50				
Relative humidity		[%]	0 ... 90				

Safety data					
Valve function		2x 3/2-way valve	5/2-way valve	5/2-way valve, with dominant signal at 14	5/3-way valve
Max. positive test pulse with 0 signal	[µs]	1600	1400	1600	1400
Max. negative test pulse with 1 signal	[µs]	1100	900	1100	900
Shock resistance		Shock test with severity level 2 to FN 942017-5 and EN 60068-2-27			
Vibration resistance		Transport application test with severity level 2 to FN 942017-4 and EN 60068-2-6			

Electrical data						
Valve function			2x 2/2-way valve	2x 3/2-way valve	5/2-way valve	5/3-way valve
Electrical connection			Central plug, round design M12x1, 3-pin			
Signal status indication			LED			
Characteristic coil data	Voltage	[V DC]	24			
	Power	[W]	1.3	1.3	1.6	1.6
Permissible voltage fluctuations		[%]	±10			
Duty cycle		[%]	100			
Degree of protection to EN 60529			IP65, NEMA4 (in combination with a plug socket)			

Materials	
Housing	PA
Seals	NBR, FPM
Screws	Galvanised steel
Note on materials	RoHS-compliant
LABS (PWIS) conformity	VDMA24364-B1/B2-L

Product weight		
2x 2/2-way valve	[g]	442
2x 3/2-way valve	[g]	442
5/2-way valve, single solenoid	[g]	426
5/2-way valve, double solenoid	[g]	439
5/3-way valve	[g]	456

Datasheet – Width 42 mm

Pilot pressure p12/14 as a function of working pressure p1

2x 2/2-way valve and 2x 3/2-way valve

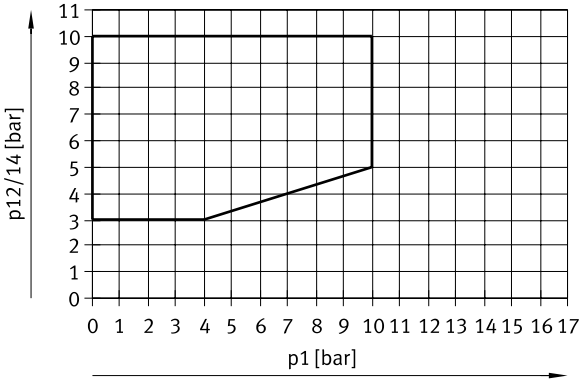

5/2-way valve and 5/3-way valve, external pilot air supply

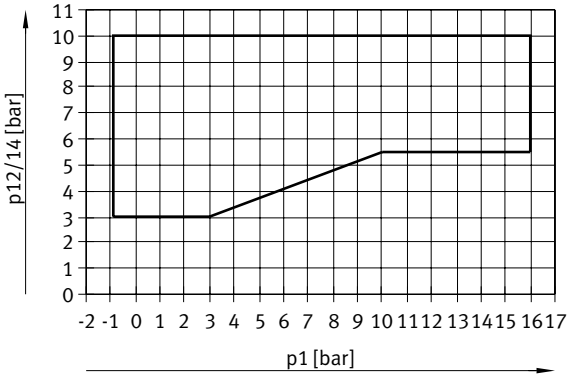

Protective circuit

Each solenoid coil VSVA is provided with a spark arresting protective circuit and protected against polarity reversal.

24 V DC version

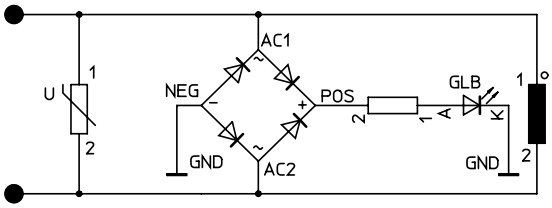

M12x1 – Pin allocation on the valve

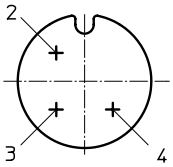

2 Signal (+) Solenoid 12
3 com (–)
4 Signal (+) Solenoid 14

Dimensions

Download CAD data ➔ www.festo.com

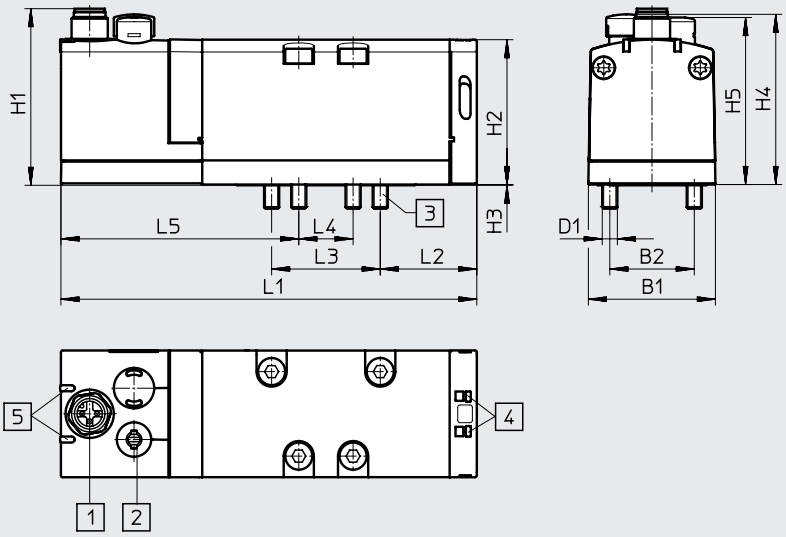

[1] Plug, 3-pin
[2] Manual override
[3] Captive screws M5x48
[4] Slot for inscription label
[5] LED

Type	B1	B2	D1	H1	H2	H3	H4	H5	L1	L2	L3	L4	L5
VSVA-B -...-D1-1R5L	42	28	M5	58.3	48	0.25	46.6	55.3	137.8	32	36	18	69.3

Ordering data – Width 42 mm

★ Core Range

Ordering data Circuit symbol	Description	Flow direction	Pilot air supply	Part no.	Type
5/2-way valve, single solenoid					
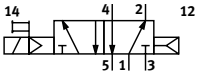	Pneumatic spring return	Not reversible	Internal	★ **561362**	**VSVA-B-M52-AD-D1-1R5L**
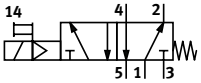	Mechanical spring return	Not reversible	Internal	★ **561363**	**VSVA-B-M52-MD-D1-1R5L**
5/2-way valve,, double solenoid					
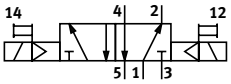	Dominance at 1st signal	Not reversible	Internal	★ **561364**	**VSVA-B-B52-D-D1-1R5L**

Ordering data – Width 42 mm

Ordering data Circuit symbol	Description	Flow direction	Pilot air supply	Part no.	Type
2x 2/2-way valve					
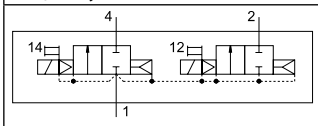	2x normally closed, pneumatic spring return	Not reversible	Internal	Order via online configurator ➔ Internet: vsva	
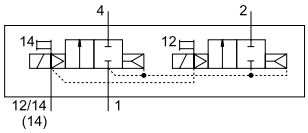	2x normally closed, pneumatic spring return	Not reversible	External		
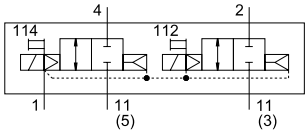	2x normally closed, vacuum operation possible at 3 and 5, pneumatic spring return	Reversible	Internal		
2x 3/2-way valve					
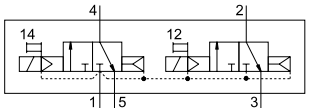	2x normally closed, pneumatic spring return	Not reversible	Internal	**561359**	**VSVA-B-T32C-AD-D1-1R5L**
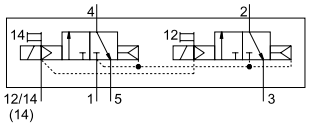	2x normally closed, pneumatic spring return	Not reversible	External	**561369**	**VSVA-B-T32C-AZD-D1-1R5L**
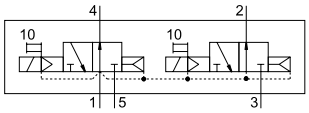	2x normally open, pneumatic spring return	Not reversible	Internal	**561360**	**VSVA-B-T32U-AD-D1-1R5L**
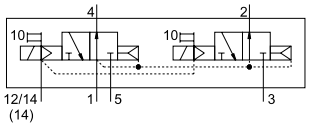	2x normally open, pneumatic spring return	Not reversible	External	**561370**	**VSVA-B-T32U-AZD-D1-1R5L**
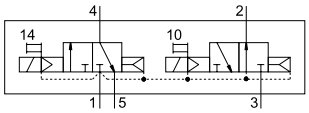	1x normally closed, 1x normally open, pneumatic spring return	Not reversible	Internal	**561361**	**VSVA-B-T32H-AD-D1-1R5L**
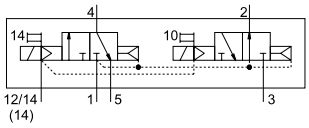	1x normally closed, 1x normally open, pneumatic spring return	Not reversible	External	**561371**	**VSVA-B-T32H-AZD-D1-1R5L**
2x 3/2-way valve, reversible					
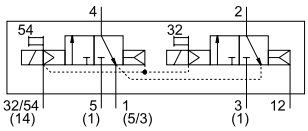	2x normally closed, pneumatic spring return	Reversible	External	Order via online configurator ➔ Internet: vsva	
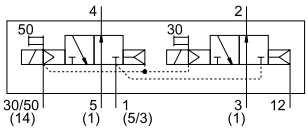	2x normally open, pneumatic spring return	Reversible	External		
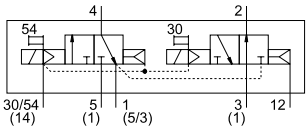	1x normally closed, 1x normally open, pneumatic spring return	Reversible	External		

Ordering data – Width 42 mm

Ordering data Circuit symbol	Description	Flow direction	Pilot air supply	Part no.	Type
5/2-way valve, single solenoid					
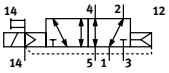	Pneumatic spring return	Reversible	External	**561372**	**VSVA-B-M52-AZD-D1-1R5L**
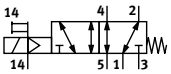	Mechanical spring return	Reversible	External	**561373**	**VSVA-B-M52-MZD-D1-1R5L**
5/2-way valve, double solenoid					
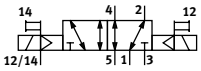	Dominance at 1st signal	Reversible	External	**561374**	**VSVA-B-B52-ZD-D1-1R5L**
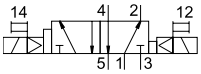	With dominant signal at 14	Not reversible	Internal	**561365**	**VSVA-B-D52-D-D1-1R5L**
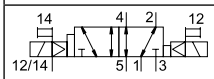	With dominant signal at 14	Reversible	External	**561375**	**VSVA-B-D52-ZD-D1-1R5L**
5/3-way valve					
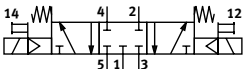	Normally closed, mechanical spring return	Not reversible	Internal	**561366**	**VSVA-B-P53C-D-D1-1R5L**
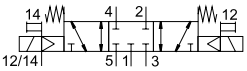	Normally closed, mechanical spring return	Reversible	External	**561376**	**VSVA-B-P53C-ZD-D1-1R5L**
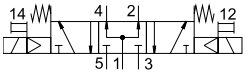	Normally open, mechanical spring return	Not reversible	Internal	**561368**	**VSVA-B-P53U-D-D1-1R5L**
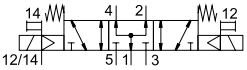	Normally open, mechanical spring return	Reversible	External	**561378**	**VSVA-B-P53U-ZD-D1-1R5L**
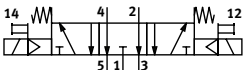	Exhausted in normal position, mechanical spring return	Not reversible	Internal	**561367**	**VSVA-B-P53E-D-D1-1R5L**
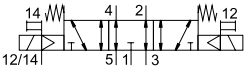	Exhausted in normal position, mechanical spring return	Reversible	External	**561377**	**VSVA-B-P53E-ZD-D1-1R5L**

Datasheet – Width 52 mm

- Flow rate
  Up to 2800 l/min

- Voltage
  24 V DC

General technical data		
Design		Piston spool
Sealing principle		Soft
Actuation type		Electrical
Type of control		Piloted
Exhaust air function		Can be throttled, externally or via vertically stacked throttle plate
Manual override		Non-detenting, detenting
Type of mounting		On sub-base
Mounting position		Any
Nominal width	[mm]	15
Overlap		Positive overlap
Width	[mm]	52
Grid dimension	[mm]	59
Pneumatic connections		Sub-base size 2 to ISO 5599-1
Conforms to standard		ISO 5599-1
Certification		c CSA us (OL)
		c UL us – Recognized (OL)
		C-Tick

Flow rates					
Valve function		2/2-way valve	3/2-way valve	5/2-way valve	5/3-way valve
Standard nominal flow rate	[l/min]	2800	2200	2800	2700
Valve		4000	3000	4000	3600
Valve on individual sub-base		2400	2000	2400	2300
Valve, pneumatically linked		2800	2200	2800	2700

Switching times [ms]					
		Switching time on	Switching time off	Switching time changeover	Switching time changeover (dominant)
2x 2/2-way valve	VSVA-B-T22...	14	35	–	–
2x 3/2-way valve	VSVA-B-T32...	20	35	–	–
2x 3/2-way valve, reversible	VSVA-B-T32...	30	30	–	–
5/2-way valve, single solenoid	VSVA-B-M52-A...	40	45	–	–
	VSVA-B-M52-M...	20	60	–	–
5/2-way valve, double solenoid	VSVA-B-B52...	–	–	18	–
	VSVA-B-D52...	–	–	–	18
5/3-way valve	VSVA-B-P53...	23	60	–	–

Datasheet – Width 52 mm

Operating and environmental conditions							
Valve function			2x 2/2-way valve	2x 3/2-way valve	2x 3/2-way valve, reversible	5/2-way valve	5/3-way valve
Operating medium			Compressed air to ISO 8573-1:2010 [7:4:4]				
Pilot medium			Compressed air to ISO 8573-1:2010 [7:4:4]				
Note on the operating/pilot medium			Lubricated operation possible (required for further operation)				
Operating pressure	Internal pilot air supply	[MPa]	0.3 ... 1	0.3 ... 1	–	0.3 ... 1	0.3 ... 1
		[bar]	3 ... 10	3 ... 10	–	3 ... 10	3 ... 10
	External pilot air supply	[MPa]	0.3 ... 1	0.3 ... 1	–0.09 ... +1	–0.09 ... +1.6	–0.09 ... +1.6
		[bar]	3 ... 10	3 ... 10	–0.9 ... +10	–0.9 ... +16	–0.9 ... +16
Pilot pressure		[MPa]	0.3 ... 1				
		[bar]	3 ... 10				
Ambient temperature		[°C]	–5 ... +50				
Relative humidity		[%]	0 ... 90				
CE marking (see declaration of conformity)			To EU EMC Directive[1)]				
UKCA marking (see declaration of conformity)[1)]			To UK EMC regulations				
			To UK RoHS regulations				
KC marking			KC EMC				

1) For information about the area of use, see the EC declaration of conformity at: www.festo.com/catalogue/... ➔ Support/Downloads.
If the devices are subject to usage restrictions in residential, commercial or light-industrial environments, further measures for the reduction of the emitted interference may be necessary.

Safety data		
Max. positive test pulse with 0 signal	[µs]	1000
Max. negative test pulse with 1 signal	[µs]	3500
Shock resistance		Shock test with severity level 2 to FN 942017-5 and EN 60068-2-27
Vibration resistance		Transport application test with severity level 2 to FN 942017-4 and EN 60068-2-6

Electrical data			
Electrical connection			Central plug, round design M12x1, 3-pin
Signal status indication			LED
Characteristic coil data	Voltage	[V DC]	24
	Power	[W]	4.6
Permissible voltage fluctuations		[%]	±10
Nominal pick-up current per solenoid coil		[mA]	165
Nominal current with current reduction		[mA]	35
Time until current reduction		[ms]	30
Duty cycle		[%]	100
Degree of protection to EN 60529			IP65, NEMA4 (in combination with a plug socket)

Materials	
Housing	Die-cast aluminium, PA
Seals	HNBR, NBR, FPM
Screws	Galvanised steel
Note on materials	RoHS-compliant
LABS (PWIS) conformity	VDMA24364-B1/B2-L

Product weight		
2x 2/2-way valve	[g]	740
2x 3/2-way valve	[g]	740
5/2-way valve, single solenoid	[g]	702
5/2-way valve, double solenoid	[g]	732
5/3-way valve	[g]	780

Datasheet – Width 52 mm

Pilot pressure p12/14 as a function of working pressure p1

2x 2/2-way valve and 2x 3/2-way valve

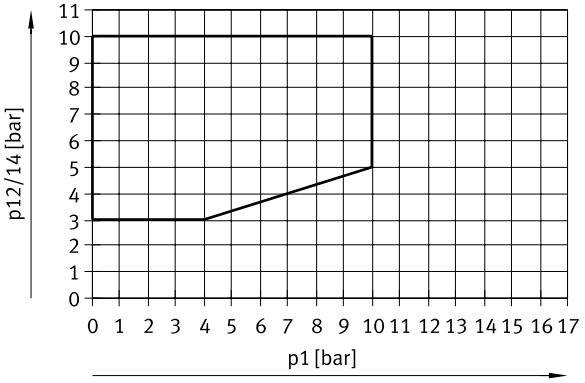

5/2-way valve and 5/3-way valve, external pilot air supply

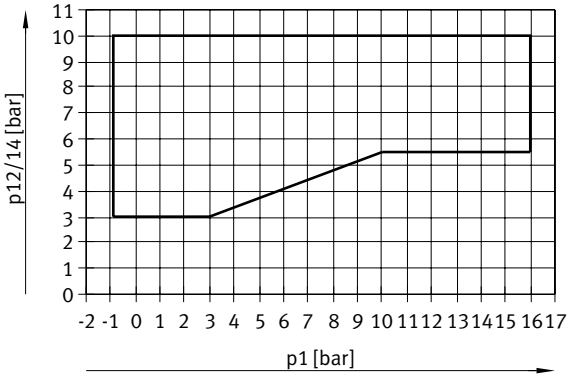

Protective circuit

Each solenoid coil VSVA is provided with a spark arresting protective circuit and protected against polarity reversal.

24 V DC version

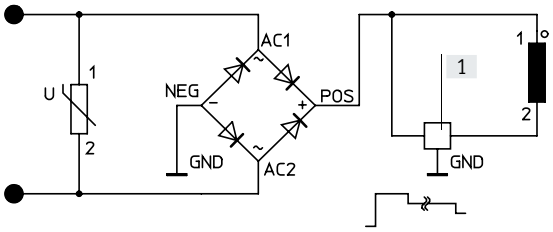

M12x1 – Pin allocation on the valve

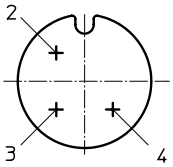

2 Signal (+) Solenoid 12
3 com (–)
4 Signal (+) Solenoid 14

[1] Holding current reduction

Dimensions

Download CAD data ➔ www.festo.com

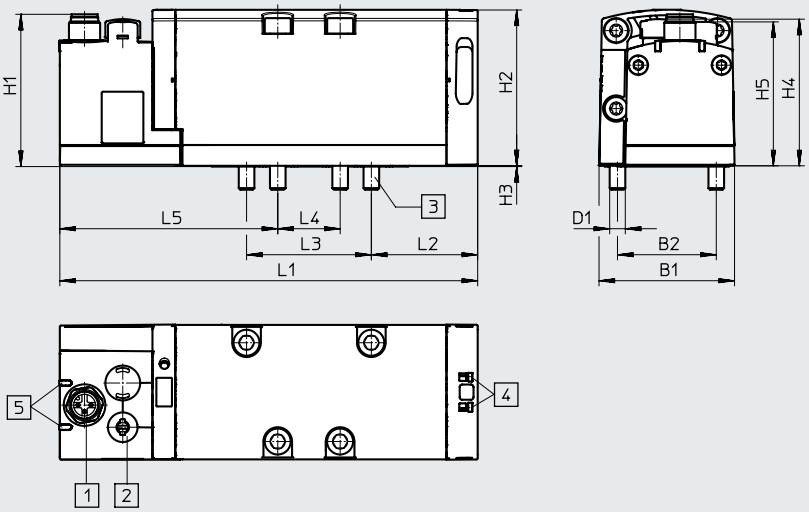

[1] Plug, 3-pin
[2] Manual override
[3] Captive screws M6x60
[4] Slot for inscription label
[5] LED

Type	B1	B2	D1	H1	H2	H3	H4	H5	L1	L2	L3	L4	L5
VSVA-B -...-D2-1R5L	52	38	M6	58.3	60	0.3	56.4	55.3	160.7	40.9	48	24	64.3

Ordering data – Width 52 mm

Ordering data Circuit symbol	Description	Flow direction	Pilot air supply	Part no.	Type
2x 2/2-way valve					
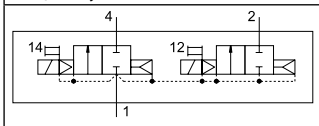	2x normally closed, pneumatic spring return	Not reversible	Internal	Order via online configurator ➔ Internet: vsva	
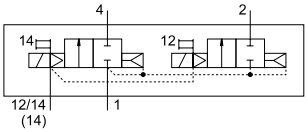	2x normally closed, pneumatic spring return	Not reversible	External		
2x 3/2-way valve					
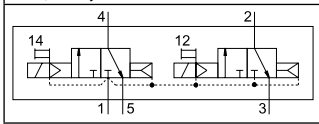	2x normally closed, pneumatic spring return	Not reversible	Internal	**566990**	**VSVA-B-T32C-AD-D2-1R5L**
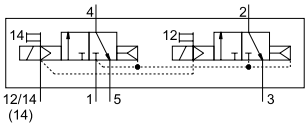	2x normally closed, pneumatic spring return	Not reversible	External	**567000**	**VSVA-B-T32C-AZD-D2-1R5L**
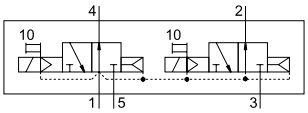	2x normally open, pneumatic spring return	Not reversible	Internal	**566991**	**VSVA-B-T32U-AD-D2-1R5L**
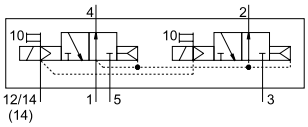	2x normally open, pneumatic spring return	Not reversible	External	**567001**	**VSVA-B-T32U-AZD-D2-1R5L**
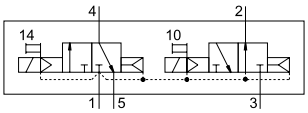	1x normally closed, 1x normally open, pneumatic spring return	Not reversible	Internal	**566992**	**VSVA-B-T32H-AD-D2-1R5L**
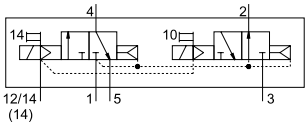	1x normally closed, 1x normally open, pneumatic spring return	Not reversible	External	**567002**	**VSVA-B-T32H-AZD-D2-1R5L**
2x 3/2-way valve, reversible					
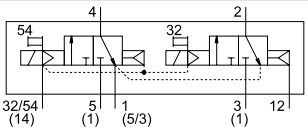	2x normally closed, pneumatic spring return	Reversible	External	Order via online configurator ➔ Internet: vsva	
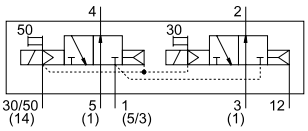	2x normally open, pneumatic spring return	Reversible	External		
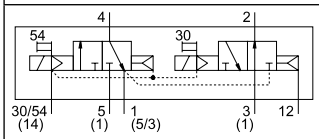	1x normally closed, 1x normally open, pneumatic spring return	Reversible	External		

Ordering data – Width 52 mm

Ordering data Circuit symbol	Description	Flow direction	Pilot air supply	Part no.	Type
5/2-way valve, single solenoid					
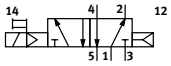	Pneumatic spring return	Not reversible	Internal	**566993**	**VSVA-B-M52-AD-D2-1R5L**
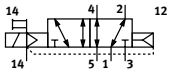	Pneumatic spring return	Reversible	External	**567003**	**VSVA-B-M52-AZD-D2-1R5L**
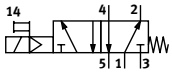	Mechanical spring return	Not reversible	Internal	**566994**	**VSVA-B-M52-MD-D2-1R5L**
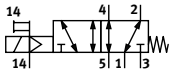	Mechanical spring return	Reversible	External	**567004**	**VSVA-B-M52-MZD-D2-1R5L**
5/2-way valve, double solenoid					
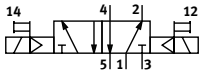	Dominance at 1st signal	Not reversible	Internal	**566995**	**VSVA-B-B52-D-D2-1R5L**
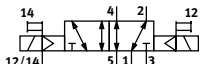	Dominance at 1st signal	Reversible	External	**567005**	**VSVA-B-B52-ZD-D2-1R5L**
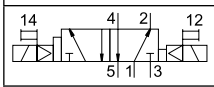	With dominant signal at 14	Not reversible	Internal	**566996**	**VSVA-B-D52-D-D2-1R5L**
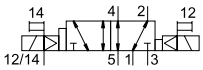	With dominant signal at 14	Reversible	External	**567006**	**VSVA-B-D52-ZD-D2-1R5L**
5/3-way valve					
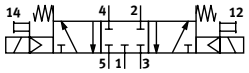	Normally closed, mechanical spring return	Not reversible	Internal	**566997**	**VSVA-B-P53C-D-D2-1R5L**
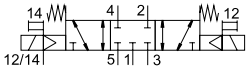	Normally closed, mechanical spring return	Reversible	External	**567007**	**VSVA-B-P53C-ZD-D2-1R5L**
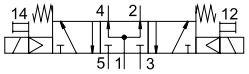	Normally open, mechanical spring return	Not reversible	Internal	**566999**	**VSVA-B-P53U-D-D2-1R5L**
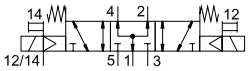	Normally open, mechanical spring return	Reversible	External	**567009**	**VSVA-B-P53U-ZD-D2-1R5L**
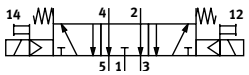	Exhausted in normal position, mechanical spring return	Not reversible	Internal	**566998**	**VSVA-B-P53E-D-D2-1R5L**
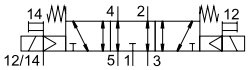	Exhausted in normal position, mechanical spring return	Reversible	External	**567008**	**VSVA-B-P53E-ZD-D2-1R5L**

Datasheet – Width 65 mm

- Flow rate
  Up to 4600 l/min

- Voltage
  24 V DC

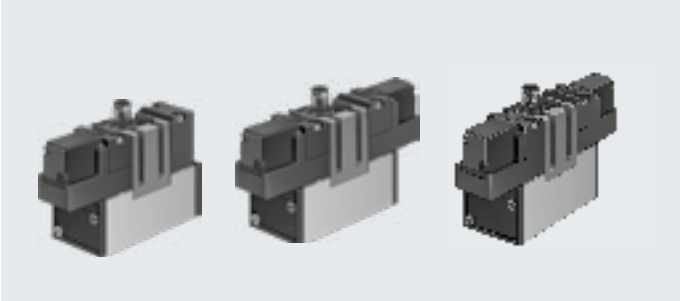

General technical data		
Design		Piston spool
Sealing principle		Soft
Actuation type		Electrical
Type of control		Piloted
Flow direction		Not reversible
Exhaust air function		Can be throttled
Manual override		Non-detenting
Type of mounting		Via through-hole
Mounting position		Any
Nominal width	[mm]	14.5
Width	[mm]	65
Grid dimension	[mm]	71
Pneumatic connections		Sub-base size 3 to ISO 5599-1
Conforms to standard		ISO 5599-1

Flow rates					
Valve function		5/2-way valve	5/3-way valve		
			Normally closed	Normally exhausted	Normally open
Standard nominal flow rate	[l/min]	4500	4100	4600	4000

Switching times [ms]					
		Switching time on	Switching time off	Switching time changeover	Switching time changeover (dominant)
5/2-way valve, single solenoid	MEBH-5/2-...	59	87	–	–
	MEBH-5/2-D-1-ZSR-FR-...	28	109	–	–
5/2-way valve, double solenoid	JMEBH-...	–	–	16	–
	JMEBDH-...	–	–	–	20
5/3-way valve	MEBH-5/3G-...	38	130	–	–
	MEBH-5/3E-...	38	130	–	–
	MEBH-5/3B-...	38	130	–	–

Datasheet – Width 65 mm

Operating and environmental conditions				
Reset method			Pneumatic spring	Mechanical spring
Operating medium			Compressed air to ISO 8573-1:2010 [7:4:4]	
Pilot medium			Compressed air to ISO 8573-1:2010 [7:4:4]	
Note on the operating/pilot medium			Lubricated operation possible (required for further operation)	
Operating pressure		[MPa]	0.2 ... 1	0.3 ... 1
		[bar]	2 ... 10	3 ... 10
Ambient temperature		[°C]	–5 ... +50	
Temperature of medium		[°C]	–5 ... +50	
Relative humidity		[%]	0 ... 90	

Electrical data			
Electrical connection			Central plug, round design M12x1, 4-pin
Characteristic coil data	Voltage	[V DC]	24
	Power	[W]	2.5
Degree of protection to EN 60529			IP65

Materials	
Housing	Die-cast aluminium
Seals	NBR
LABS (PWIS) conformity	VDMA24364-B1/B2-L

Datasheet – Width 65 mm

Dimensions Download CAD data ➔ www.festo.com

5/2-way valves, single solenoid

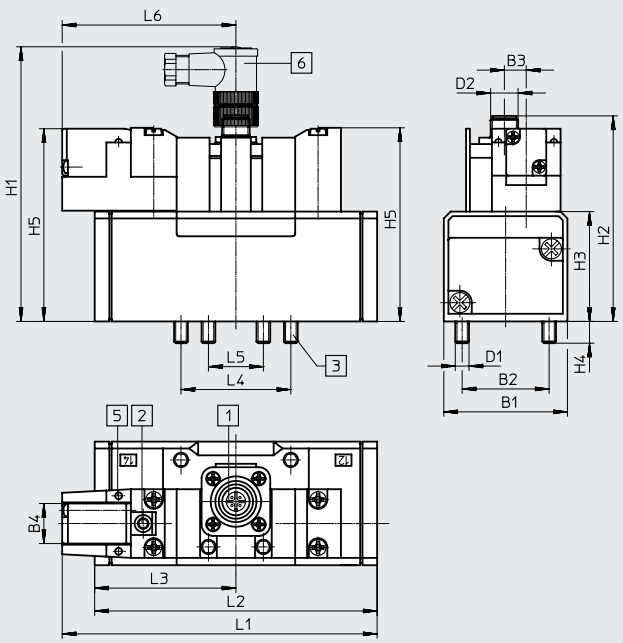

[1] Plug socket mounting adjustable by 3x30°
[2] Manual override
[3] Captive retaining screws
[5] LED indicator
[6] Angled plug socket SIE-WD-TR ➔ page 139

Type	B1	B2	B3	B4	D1	D2	H1	H2	H3	H4	H5	L1	L2	L3	L4	L5	L6
MEBH-5/2 ...	65	48	12	17.5	M8	M12	130	97.8	55	12	93.1	158.7	145.4	72.7	64	32	86
MEBH-5/2- ... -FR-C												178	164.7				

5/2-way double solenoid valves, 5/3-way valves

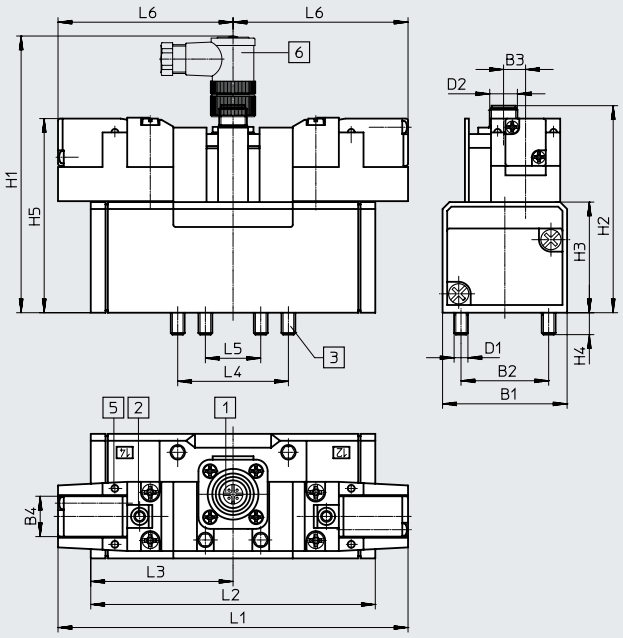

[1] Plug socket mounting adjustable by 3x30°
[2] Manual override
[3] Captive retaining screws
[5] LED indicator
[6] Angled plug socket SIE-WD-TR ➔ page 139

Type	B1	B2	B3	B4	D1	D2	H1	H2	H3	H4	H5	L1	L2	L3	L4	L5	L6
JMEBH-5/2- ...	65	48	12	17.5	M8	M12	130	97.8	55	12	93.1	171.9	145.4	72.7	64	32	86
JMEBDH-5/2- ...													145.4	72.7			
MEBH-5/3...													184	92			

Ordering data – Width 65 mm

Central plug M12 – Pin allocation

5/2-way valve

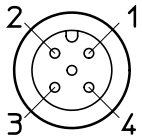

1 Unused
2 Unused
3 com (–)
4 Signal (+) Solenoid 14

5/2-way double solenoid valve and 5/3-way valve

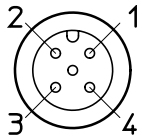

1 Unused
2 Signal (+) Solenoid 12
3 com (–)
4 Signal (+) Solenoid 14

Ordering data

Circuit symbol	Description	Pilot air supply	Weight [g]	Part no.	Type
5/2-way valve, single solenoid					
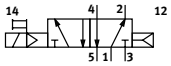	Pneumatic spring return	Internal	1000	**184507**	**MEBH-5/2-D-3-ZSR-C**
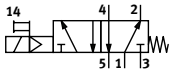	Mechanical spring return	Internal	1000	**184508**	**MEBH-5/2-D-3-ZSR-FR-C**
5/2-way valve, double solenoid					
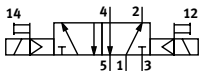	–	Internal	1080	**184509**	**JMEBH-5/2-D-3-ZSR-C**
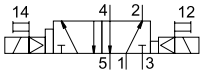	With dominant signal at 14	Internal	1080	**184510**	**JMEBDH-5/2-D-3-ZSR-C**
5/3-way valve					
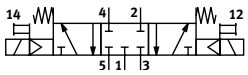	Normally closed, mechanical spring return	Internal	1120	**184512**	**MEBH-5/3G-D-3-ZSR-C**
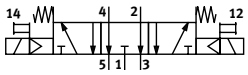	Exhausted in normal position, mechanical spring return	Internal	1120	**184511**	**MEBH-5/3E-D-3-ZSR-C**
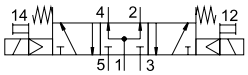	Normally open, mechanical spring return	Internal	1120	**184513**	**MEBH-5/3B-D-3-ZSR-C**

Datasheet – Width 42 mm

- Flow rate
  Up to 1200 l/min

- Voltage
  24 V DC

General technical data			
Design			Piston spool
Sealing principle			Soft
Actuation type			Electrical
Type of control			Piloted
Flow direction	With external pilot air supply		Reversible
	With internal pilot air supply		Not reversible
Exhaust air function			Can be throttled
Manual override			Non-detenting
Type of mounting			On sub-base via through-hole
Mounting position			Any
Nominal width		[mm]	8
Overlap			Positive overlap
Width		[mm]	42
Grid dimension		[mm]	43
Pneumatic connections			Sub-base size 1 to ISO 5599-1
Noise level		[dB (A)]	85
Conforms to standard			ISO 5599-1

Flow rates			
Standard nominal flow rate		[l/min]	1200

Switching times [ms]		Switching time on	Switching time off	Switching time changeover	Switching time changeover (dominant)
5/2-way valve, single solenoid	MDH-5/2-...	25	36	–	–
	MDH-5/2-...-FR-...	20	42	–	–
5/2-way valve, double solenoid	JMDH-...	–	–	18	–
	JMDDH-...	–	–	18	18
5/3-way valve	MDH-5/3G-...	25	55	–	–
	MDH-5/3E-...	25	55	–	–
	MDH-5/3B-...	25	55	–	–

Datasheet – Width 42 mm

Operating and environmental conditions				
Reset method			Pneumatic spring	Mechanical spring
Operating medium			Compressed air to ISO 8573-1:2010 [7:4:4]	
Pilot medium			Compressed air to ISO 8573-1:2010 [7:4:4]	
Note on the operating/pilot medium			Lubricated operation possible (required for further operation)	
Operating pressure	Internal pilot air supply	[bar]	2 ... 10	3 ... 10
	External pilot air supply	[bar]	–0.9 ... +16	–0.9 ... +16
Pilot pressure	Internal pilot air supply	[bar]	2 ... 10	3 ... 10
	External pilot air supply	[bar]	3 ... 10	3 ... 10
Ambient temperature		[°C]	–10 ... +50	
Temperature of medium		[°C]	–10 ... +50	

Safety data		
Max. positive test pulse with 0 signal	[µs]	3800
Max. negative test pulse with 1 signal	[µs]	4900
Shock resistance		Shock test with severity level 2 to FN 942017-5 and EN 60068-2-27
Vibration resistance		Transport application test with severity level 1 to FN 942017-4 and EN 60068-2-6

Electrical data			
Electrical connection			M12x1
Characteristic coil data	Voltage	[V DC]	24
	Power	[W]	2.7
Permissible voltage fluctuations		[%]	±10
Duty cycle		[%]	100
Degree of protection to EN 60529			IP65

Materials	
Housing	Die-cast aluminium
Seals	HNBR, NBR
LABS (PWIS) conformity	VDMA24364-B1/B2-L

Datasheet – Width 42 mm

Dimensions Download CAD data ➔ www.festo.com

5/2-way valves, single solenoid

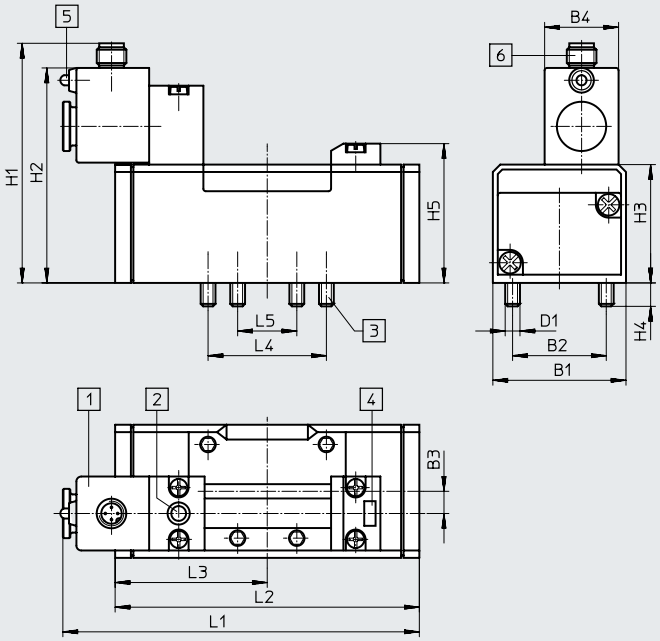

[1] Solenoid coil can be turned 90° regardless of the manual override
[2] Manual override
[3] Captive retaining screws
[4] Slot for inscription label
[5] LED indicator
[6] Device plug M12x1
2-pin coil to VDMA
4-pin coil to Desina

Type	B1	B2	B3	B4	D1	H1	H2	H3	H4	H5	L1	L2	L3	L4	L5	L6
MDH-5/2 ...	42	28	6	30	M5	87.2	77.2	38	9	46.5	121.8	87.6	43.8	36	18	–
MDH-5/2- ... -FR-...											132.2	98				

5/2-way double solenoid valves, 5/3-way valves

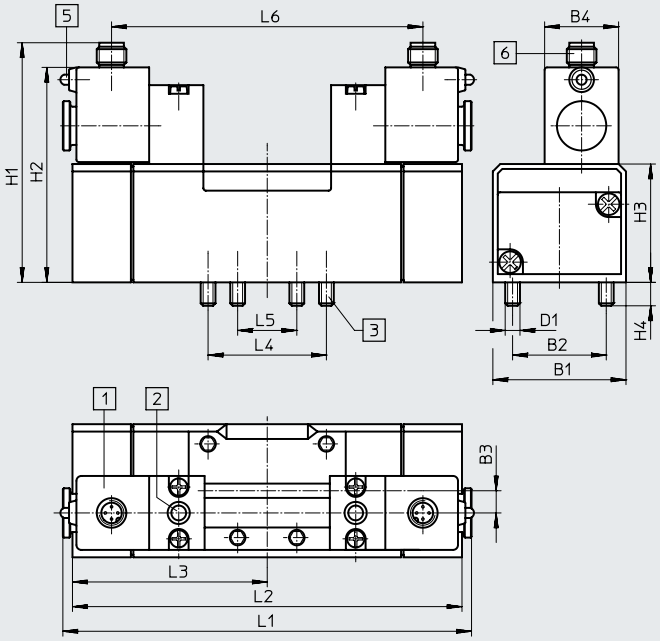

[1] Solenoid coil can be turned 90° regardless of the manual override
[2] Manual override
[3] Captive retaining screws
[5] LED indicator
[6] Device plug M12x1
2-pin coil to VDMA
4-pin coil to Desina

Type	B1	B2	B3	B4	D1	H1	H2	H3	H4	H5	L1	L2	L3	L4	L5	L6
JMDH-5/2- ...	42	28	6	30	M5	87.2	77.2	38	9	–	148	87.6	43.8	36	18	108.5
JMDDH-5/2- ...												87.6	43.8			
MDH-5/3...												108.4	54.3			

Ordering data – Width 42 mm

Terminal allocation

M12 plug – 2-pin to VDMA

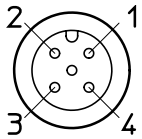

1 Unused
2 Unused
3 com (–)
4 Signal (+)

M12 plug – 4-pin to Desina

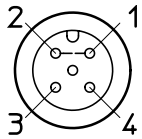

1 Connected to 2
2 Connected to 1
3 com (–)
4 Signal (+)

Ordering data – Solenoid valves

Circuit symbol	Description	Coil	Pilot air supply	Weight [g]	Part no.	Type
5/2-way valve, single solenoid						
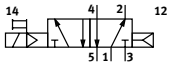	Pneumatic spring return	2-pin to VDMA	Internal	420	**197125**	**MDH-5/2-D-1-M12-C**
		4-pin to Desina	Internal	420	**540803**	**MDH-5/2-D-1-M12D-C**
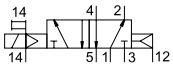	Pneumatic spring return	2-pin to VDMA	External	420	**533332**	**MDH-5/2-D-1-S-M12-C**
		4-pin to Desina	External	420	**540810**	**MDH-5/2-D-1-S-M12D-C**
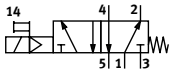	Mechanical spring return	2-pin to VDMA	Internal	420	**533010**	**MDH-5/2-D-1-FR-M12-C**
		4-pin to Desina	Internal	420	**540804**	**MDH-5/2-D-1-FR-M12D-C**
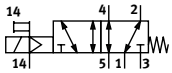	Mechanical spring return	2-pin to VDMA	External	420	**533761**	**MDH-5/2-D-1-S-FR-M12-C**
		4-pin to Desina	External	420	**540811**	**MDH-5/2-D-1-S-FR-M12D-C**
5/2-way valve, double solenoid						
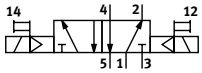	–	2-pin to VDMA	Internal	550	**532687**	**JMDH-5/2-D-1-M12-C**
		4-pin to Desina	Internal	550	**540809**	**JMDH-5/2-D-1-M12D-C**
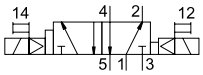	With dominant signal at 14	2-pin to VDMA	Internal	550	**539079**	**JMDDH-5/2-D-1-M12-C**
		4-pin to Desina	Internal	550	**540808**	**JMDDH-5/2-D-1-M12D-C**
5/3-way valve						
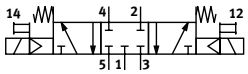	Normally closed, mechanical spring return	2-pin to VDMA	Internal	580	**525307**	**MDH-5/3G-D-1-M12-C**
		4-pin to Desina	Internal	580	**540806**	**MDH-5/3G-D-1-M12D-C**
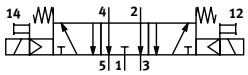	Exhausted in normal position, mechanical spring return	2-pin to VDMA	Internal	580	**197126**	**MDH-5/3E-D-1-M12-C**
		4-pin to Desina	Internal	580	**540805**	**MDH-5/3E-D-1-M12D-C**
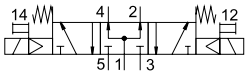	Normally open, mechanical spring return	2-pin to VDMA	Internal	580	**533005**	**MDH-5/3B-D-1-M12-C**
		4-pin to Desina	Internal	580	**540807**	**MDH-5/3B-D-1-M12D-C**

Datasheet – Width 52 mm

- Flow rate
  Up to 2300 l/min

- Voltage
  24 V DC

General technical data		
Design		Piston spool
Sealing principle		Soft
Actuation type		Electrical
Type of control		Piloted
Flow direction		Not reversible
Exhaust air function		Can be throttled
Manual override		Non-detenting
Type of mounting		On sub-base, with through-hole and screw
Mounting position		Any
Nominal width	[mm]	11.5
Overlap		Positive overlap
Width	[mm]	52
Grid dimension	[mm]	56
Pneumatic connections		Sub-base size 2 to ISO 5599-1
Noise level	[dB (A)]	85
Conforms to standard		ISO 5599-1

Flow rates		
Standard nominal flow rate	[l/min]	2300

Switching times [ms]		Switching time on	Switching time off	Switching time changeover	Switching time changeover (dominant)
5/2-way valve, single solenoid	MDH-5/2-...	45	60	–	–
	MDH-5/2-...-FR-...	25	60	–	–
5/2-way valve, double solenoid	JMDH-...	–	–	20	–
	JMDDH-...	–	–	20	20
5/3-way valve	MDH-5/3G-...	35	70	–	–
	MDH-5/3E-...	35	70	–	–
	MDH-5/3B-...	35	70	–	–

Datasheet – Width 52 mm

Operating and environmental conditions			
Reset method		Pneumatic spring	Mechanical spring
Operating medium		Compressed air to ISO 8573-1:2010 [7:4:4]	
Note on the operating/pilot medium		Lubricated operation possible (required for further operation)	
Operating pressure	[bar]	2 ... 10	3 ... 10
Ambient temperature	[°C]	–10 ... +50	
Temperature of medium	[°C]	–10 ... +50	

Safety data		
Max. positive test pulse with 0 signal	[µs]	3800
Max. negative test pulse with 1 signal	[µs]	4900
Shock resistance		Shock test with severity level 2 to FN 942017-5 and EN 60068-2-27
Vibration resistance		Transport application test with severity level 1 to FN 942017-4 and EN 60068-26

Electrical data			
Electrical connection			M12x1
Characteristic coil data	Voltage	[V DC]	24
	Power	[W]	2.7
Permissible voltage fluctuations		[%]	±10
Duty cycle		[%]	100
Degree of protection to EN 60529			IP65

Materials	
Housing	Die-cast aluminium
Seals	HNBR, NBR
Note on materials	RoHS-compliant
LABS (PWIS) conformity	VDMA24364-B1/B2-L

Datasheet – Width 52 mm

Dimensions Download CAD data ➔ www.festo.com

5/2-way valves, single solenoid

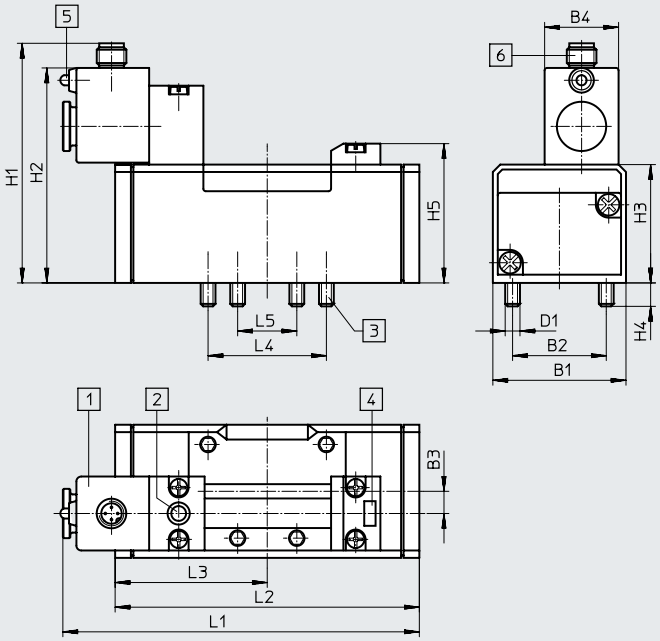

[1] Solenoid coil can be turned 90° regardless of the manual override
[2] Manual override
[3] Captive retaining screws
[4] Slot for inscription label
[5] LED indicator
[6] Device plug M12x1
2-pin coil to VDMA
4-pin coil to Festo

Type	B1	B2	B3	B4	D1	H1	H2	H3	H4	H5	L1	L2	L3	L4	L5	L6
MDH-5/2 ...	54	38	9	30	M6	97.2	87.2	48	9.5	56.5	144.6	123.4	61.7	48	24	–
MDH-5/2- ... -FR-...											161.9	140.6				

5/2-way double solenoid valves, 5/3-way valves

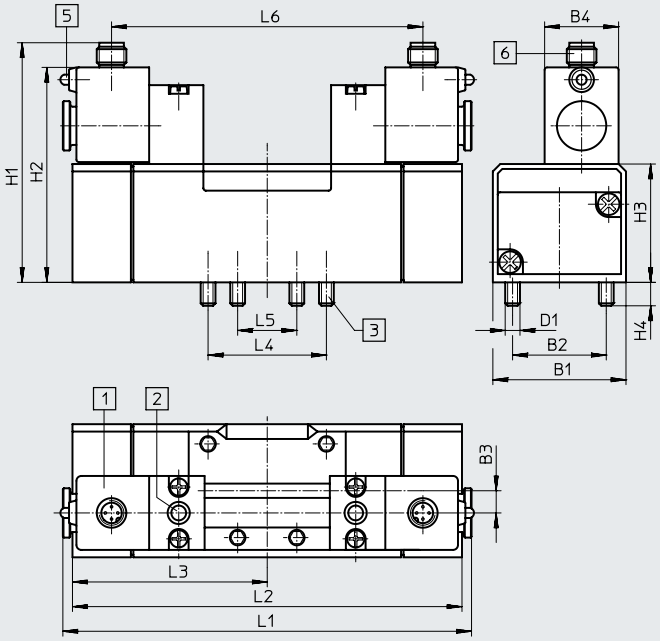

[1] Solenoid coil can be turned 90° regardless of the manual override
[2] Manual override
[3] Captive retaining screws
[5] LED indicator
[6] Device plug M12x1
2-pin coil to VDMA
4-pin coil to Festo

Type	B1	B2	B3	B4	D1	H1	H2	H3	H4	H5	L1	L2	L3	L4	L5	L6
JMDH-5/2- ...	54	38	9	30	M6	97.2	87.2	48	9.5	–	165.8	123.4	61.7	48	24	126.3
JMDDH-5/2- ...												123.4	61.7			
MDH-5/3...												158	79			

Ordering data – Width 52 mm

Terminal allocation

M12 plug – 2-pin to VDMA

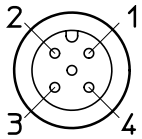

1 Unused
2 Unused
3 com (–)
4 Signal (+)

M12 plug – 4-pin to Desina

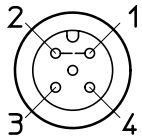

1 Connected to 2
2 Connected to 1
3 com (–)
4 Signal (+)

Ordering data

Circuit symbol	Description	Coil	Pilot air supply	Weight [g]	Part no.	Type
5/2-way valve, single solenoid						
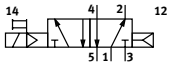	Pneumatic spring return	2-pin to VDMA	Internal	810	**533008**	**MDH-5/2-D-2-M12-C**
		4-pin to Desina	Internal	810	**540812**	**MDH-5/2-D-2-M12D-C**
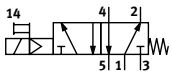	Mechanical spring return	2-pin to VDMA	Internal	810	**533011**	**MDH-5/2-D-2-FR-M12-C**
		4-pin to Desina	Internal	810	**540813**	**MDH-5/2-D-2-FR-M12D-C**
5/2-way valve, double solenoid						
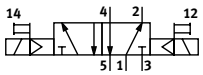	–	2-pin to VDMA	Internal	940	**533013**	**JMDH-5/2-D-2-M12-C**
		4-pin to Desina	Internal	940	**540818**	**JMDH-5/2-D-2-M12D-C**
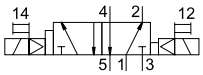	With dominant signal at 14	2-pin to VDMA	Internal	940	**539077**	**JMDDH-5/2-D-2-M12-C**
		4-pin to Desina	Internal	940	**540817**	**JMDDH-5/2-D-2-M12D-C**
5/3-way valve						
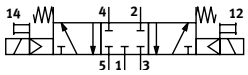	Normally closed, mechanical spring return	2-pin to VDMA	Internal	1000	**539078**	**MDH-5/3G-D-2-M12-C**
		4-pin to Desina	Internal	1000	**540815**	**MDH-5/3G-D-2-M12D-C**
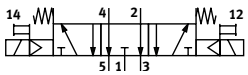	Exhausted in normal position, mechanical spring return	2-pin to VDMA	Internal	1000	**533016**	**MDH-5/3E-D-2-M12-C**
		4-pin to Desina	Internal	1000	**540814**	**MDH-5/3E-D-2-M12D-C**
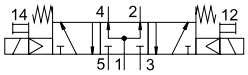	Normally open, mechanical spring return	2-pin to VDMA	Internal	1000	**533006**	**MDH-5/3B-D-2-M12-C**
		4-pin to Desina	Internal	1000	**540816**	**MDH-5/3B-D-2-M12D-C**

Datasheet – Width 65 mm

- Flow rate
  Up to 4500 l/min

- Voltage
  24 V DC

General technical data		
Design		Piston spool
Sealing principle		Soft
Actuation type		Electrical
Type of control		Piloted
Flow direction		Not reversible
Exhaust air function		Can be throttled
Manual override		Non-detenting
Type of mounting		On sub-base, with through-hole and screw
Mounting position		Any
Nominal width	[mm]	14.5
Overlap		Positive overlap
Width	[mm]	65
Grid dimension	[mm]	71
Pneumatic connections		Sub-base size 3 to ISO 5599-1
Noise level	[dB (A)]	85
Conforms to standard		ISO 5599-1

Flow rates					
Valve function		5/2-way valve	5/3-way valve		
			Normally closed	Normally exhausted	Normally open
Standard nominal flow rate	[l/min]	4500	4100	4600	4000

Switching times [ms]					
		Switching time on	Switching time off	Switching time changeover	Switching time changeover (dominant)
5/2-way valve, single solenoid	MDH-5/2-...	54	57	–	–
	MDH-5/2-...-FR-...	28	68	–	–
5/2-way valve, double solenoid	JMDH-...	–	–	21	–
	JMDDH-...	–	–	23	23
5/3-way valve	MDH-5/3G-...	35	79	–	–
	MDH-5/3E-...	36	84	–	–
	MDH-5/3B-...	36	84	–	–

Datasheet – Width 65 mm

Operating and environmental conditions			
Reset method		Pneumatic spring	Mechanical spring
Operating medium		Compressed air to ISO 8573-1:2010 [7:4:4]	
Note on the operating/pilot medium		Lubricated operation possible (required for further operation)	
Operating pressure	[bar]	2 ... 10	3 ... 10
Ambient temperature	[°C]	–10 ... +50	
Temperature of medium	[°C]	–10 ... +50	

Safety data		
Max. positive test pulse with 0 signal	[µs]	3800
Max. negative test pulse with 1 signal	[µs]	4900
Shock resistance		Shock test with severity level 2 to FN 942017-5 and EN 60068-2-27
Vibration resistance		Transport application test with severity level 1 to FN 942017-4 and EN 60068-2-6

Electrical data			
Electrical connection			M12x1
Characteristic coil data	Voltage	[V DC]	24
	Power	[W]	2.7
Permissible voltage fluctuations		[%]	±10
Duty cycle		[%]	100
Degree of protection to EN 60529			IP65

Materials	
Housing	Die-cast aluminium
Seals	HNBR, NBR
Note on materials	RoHS-compliant
LABS (PWIS) conformity	VDMA24364-B1/B2-L

Datasheet – Width 65 mm

Dimensions Download CAD data ➔ www.festo.com

5/2-way valve, single solenoid

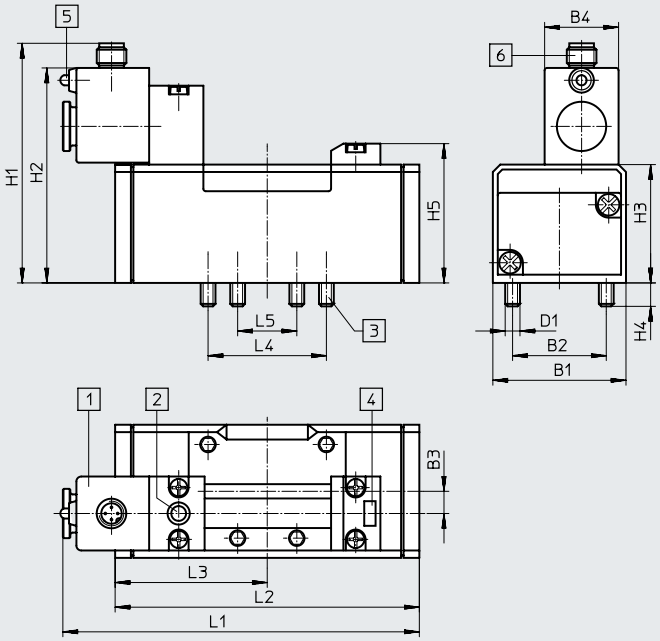

[1] Solenoid coil can be turned 90° regardless of the manual override
[2] Manual override
[3] Captive retaining screws
[4] Slot for inscription label
[5] LED indicator
[6] Device plug M12x1
2-pin coil to VDMA
4-pin coil to Festo

Type	B1	B2	B3	B4	D1	H1	H2	H3	H4	H5	L1	L2	L3	L4	L5	L6
MDH-5/2 ...	65	48	12	30	M8	104.2	94.2	55	12	62.5	165.9	145.4	72.7	64	32	–
MDH-5/2- ... -FR-...											182.5	140.6				

5/2-way double solenoid valves, 5/3-way valves

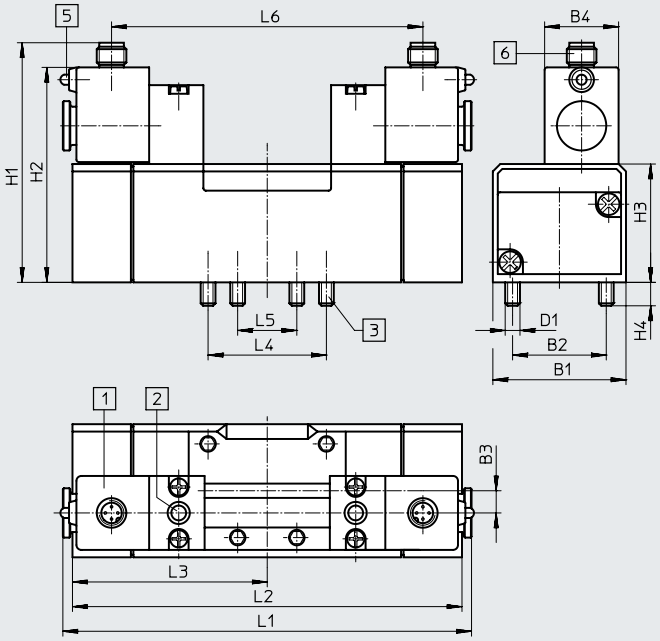

[1] Solenoid coil can be turned 90° regardless of the manual override
[2] Manual override
[3] Captive retaining screws
[5] LED indicator
[6] Device plug M12x1
2-pin coil to VDMA
4-pin coil to Festo

Type	B1	B2	B3	B4	D1	H1	H2	H3	H4	H5	L1	L2	L3	L4	L5	L6
JMDH-5/2- ...	65	48	12	30	M8	104.2	94.2	55	12	–	186.4	145.4	72.7	64	32	146.9
JMDDH-5/2- ...												145.4	72.7			
MDH-5/3...												184	92			

Ordering data – Width 65 mm

Terminal allocation

M12 plug – 2-pin to VDMA

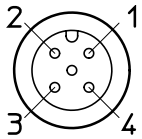

1 Unused
2 Unused
3 com (–)
4 Signal (+)

M12 plug – 4-pin to Desina

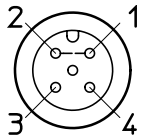

1 Connected to 2
2 Connected to 1
3 com (–)
4 Signal (+)

Ordering data

Circuit symbol	Description	Coil	Pilot air supply	Weight [g]	Part no.	Type
5/2-way valve, single solenoid						
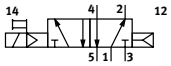	Pneumatic spring return	2-pin to VDMA	Internal	1000	**533009**	**MDH-5/2-D-3-M12-C**
		4-pin to Desina	Internal	1000	**540819**	**MDH-5/2-D-3-M12D-C**
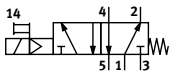	Mechanical spring return	2-pin to VDMA	Internal	1000	**533012**	**MDH-5/2-D-3-FR-M12-C**
		4-pin to Desina	Internal	1000	**540820**	**MDH-5/2-D-3-FR-M12D-C**
5/2-way valve, double solenoid						
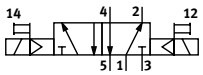	–	2-pin to VDMA	Internal	1100	**533015**	**JMDH-5/2-D-3-M12-C**
		4-pin to Desina	Internal	1100	**540825**	**JMDH-5/2-D-3-M12D-C**
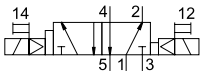	With dominant signal at 14	2-pin to VDMA	Internal	1100	**539081**	**JMDDH-5/2-D-3-M12-C**
		4-pin to Desina	Internal	1100	**540824**	**JMDDH-5/2-D-3-M12D-C**
5/3-way valve						
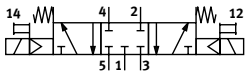	Normally closed, mechanical spring return	2-pin to VDMA	Internal	1120	**539080**	**MDH-5/3G-D-3-M12-C**
		4-pin to Desina	Internal	1120	**540822**	**MDH-5/3G-D-3-M12D-C**
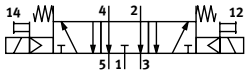	Exhausted in normal position, mechanical spring return	2-pin to VDMA	Internal	1120	**533017**	**MDH-5/3E-D-3-M12-C**
		4-pin to Desina	Internal	1120	**540821**	**MDH-5/3E-D-3-M12D-C**
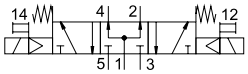	Normally open, mechanical spring return	2-pin to VDMA	Internal	1120	**533007**	**MDH-5/3B-D-3-M12-C**
		4-pin to Desina	Internal	1120	**540823**	**MDH-5/3B-D-3-M12D-C**

Datasheet – Width 76 mm

- Flow rate
  Up to 6000 l/min

- Voltage
  24 V DC
  48 V AC

General technical data		
Design		Piston spool
Sealing principle		Soft
Actuation type		Electrical
Type of control		Piloted
Flow direction		Not reversible
Exhaust air function		Can be throttled
Manual override		Non-detenting
Type of mounting		On sub-base, with through-hole and screw
Mounting position		Any
Nominal width	[mm]	18
Overlap		Positive overlap
Width	[mm]	76
Grid dimension	[mm]	82
Pneumatic connections		Sub-base size 4 to ISO 5599-1
Noise level	[dB (A)]	85
Conforms to standard		ISO 5599-1

Flow rates			
Valve function		5/2-way valve	5/3-way valve
Standard nominal flow rate	[l/min]	6000	4800

Switching times [ms]				
		Switching time on	Switching time off	Switching time changeover
5/2-way valve	Single solenoid	120	160	–
	Double solenoid	–	–	40
5/3-way valve		85	290	–

Datasheet – Width 76 mm

Operating and environmental conditions				
Valve function			MDH-...-D-4-24DC, JMDH-...-D-4-24DC	MDH-...-D-4, JMDH-...-D-4
Operating medium			Compressed air to ISO 8573-1:2010 [7:4:4]	
Note on the operating/pilot medium			Lubricated operation possible (required for further operation)	
Operating pressure	5/2-way valve, single solenoid	[bar]	3 ... 16	
	5/2-way valve, double solenoid	[bar]	2 ... 16	
	5/3-way valve	[bar]	3 ... 16	
Ambient temperature		[°C]	–10 ... +50	
Temperature of medium		[°C]	–10 ... +60	
CE marking (see declaration of conformity)[1]			To EU Low Voltage Directive	–
UKCA marking (see declaration of conformity)[1]			To UK regulations for electrical equipment	–

1) Additional information: www.festo.com/catalogue/... → Support/Downloads.

Safety data			
Type		MDH-...-D-4-24DC, JMDH-...-D-4-24DC	MDH-...-D-4, JMDH-...-D-4
Max. positive test pulse with 0 signal	[µs]	4300	–
Max. negative test pulse with 1 signal	[µs]	2100	–

Electrical data – MDH-...-24DC, JMDH-...-24DC				
			DC voltage	Alternating voltage
Electrical connection			To DIN EN 175301-803	
Characteristic coil data	Voltage	[V DC]	24	–
		[V AC]	–	48
	Frequency	[Hz]	–	5 0/60
	Power	[W]	6.8	–
	Pick-up power	[VA]	–	14.5
	Holding power	[VA]	–	9.9
Duty cycle		[%]	100	
Degree of protection to EN 60529			IP65	

Electrical data – Pilot valve MDH-3/2-...													
Type			MDH-3/2-24DC			MDH-3/2-24DC/42AC			MDH-3/2-110AC		MDH-3/2-230AC		
Electrical connection			Plug, square design to EN 175301-803, type A										
Characteristic coil data	Voltage	[V DC]	24	–	–	24	–	–	–	–	110	–	–
		[V AC]	–	48	53	–	42	42	110	110	–	230	230
	Frequency	[Hz]	–	50	60	–	50	60	50	60	–	50	60
	Power	[W]	6.8	–	–	8.4	–	–	–	–	6.3	–	–
	Pick-up power	[VA]	–	14.5	15	–	14	12	14.5	12	–	14.5	12
	Holding power	[VA]	–	9.9	9.3	–	10	7	10.5	7.6	–	10.5	7.6
Permissible voltage fluctuations		[%]	±10	±10	±10	±10	±10	±10	±10	±10	±10	±10	±10
Permissible frequency fluctuations		[%]	–	–	–	±10	±10	±10	±10	±10	±10	±10	±10
Duty cycle		[%]	100										
Degree of protection to EN 60529			IP65										

Materials	
Housing	Aluminium
Seals	NBR
Note on materials	RoHS-compliant
LABS (PWIS) conformity	VDMA24364-B1/B2-L

Datasheet – Width 76 mm

Dimensions Download CAD data ➔ www.festo.com

5/2-way valves, single solenoid

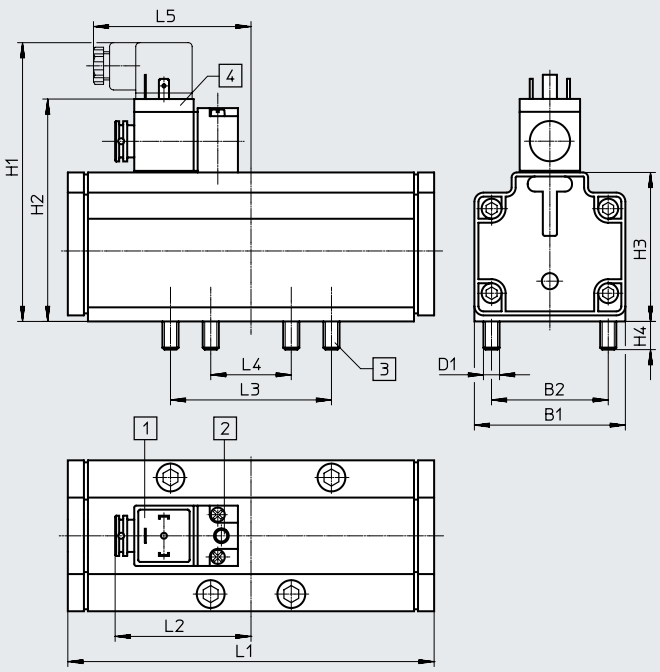

[1] Connection for plug socket with plug pattern to EN 175301-803, type A ➔ page 138
[2] Manual override
[3] Captive retaining screws
[4] Solenoid coil can be turned 90° regardless of the manual override

Type	B1	B2	D1	H1	H2	H3	H4	L1	L2	L3	L4	L5
MDH-5/2 ...	76	58	M8	139	110.5	74	14	182	67.5	80	40	81

5/2-way double solenoid valves, 5/3-way valves

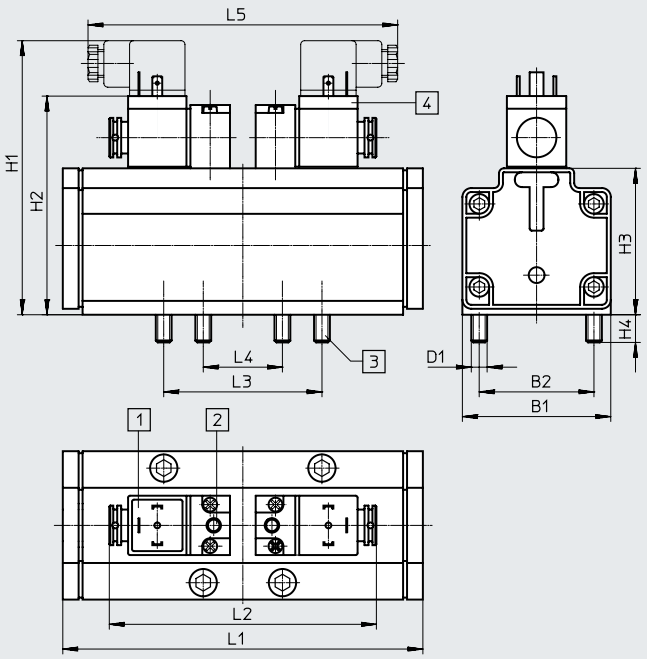

[1] Connection for plug socket with plug pattern to EN 175301-803, type A ➔ page 138
[2] Manual override
[3] Captive retaining screws
[4] Solenoid coil can be turned 90° regardless of the manual override

Type	B1	B2	D1	H1	H2	H3	H4	L1	L2	L3	L4	L5
JMDH-5/2- ...	76	58	M8	139	110.5	74	14	182	135	80	40	162
MDH-5/3...												

Ordering data – Width 76 mm

Ordering data Circuit symbol	Description	Voltage	Pilot air supply	Weight [g]	Part no.	Type
5/2-way valve, single solenoid						
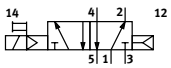	Pneumatic spring return	24 V DC	Internal	2600	**12457**	**MDH-5/2-3/4-D-4-24DC**
		–	Internal	2600	**14544**	**MDH-5/2-3/4-D-4**[1]
5/2-way valve, double solenoid						
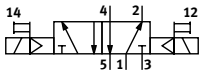	–	24 V DC	Internal	2600	**12458**	**JMDH-5/2-3/4-D-4-24DC**
		–	Internal	2600	**14545**	**JMDH-5/2-3/4-D-4**[1]
5/3-way valve						
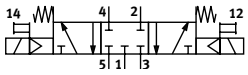	Normally closed, mechanical spring return	24 V DC	Internal	2600	**12459**	**MDH-5/3G-3/4-D-4-24DC**
		–	Internal	2600	**14546**	**MDH-5/3G-3/4-D-4**[1]
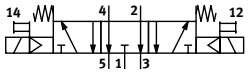	Exhausted in normal position, mechanical spring return	24 V DC	Internal	2600	**12460**	**MDH-5/3E-3/4-D-4-24DC**
		–	Internal	2600	**14547**	**MDH-5/3E-3/4-D-4**[1]
Usable pilot valves						
	Electrical connection to EN 175301-803 type A	24 V DC	–	140	**119600**	**MDH-3/2-24DC**
		24 V DC/ 42 V AC	–	140	**119603**	**MDH-3/2-24DC/42AC**
		110 V AC	–	140	**119601**	**MDH-3/2-110AC**
		110 V DC/ 230 V AC	–	140	**119602**	**MDH-3/2-230AC**

1) Without pilot valve. The part number of the pilot valve must be added after the type code when ordering.
Order example: 14546 MDH-5/3G-3/4-D-4-119602 (for MDH-3/2-230AC with part no. 119602)

Peripherals overview

Valve on individual sub-base

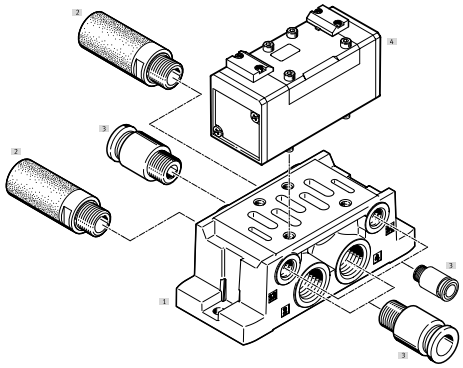

Individual components

		Type	Brief description	➔ Page/Internet
[1]	Sub-base	VABS-S1-...	Pneumatic ports on the side	105
	Individual sub-base	NAS-...	Pneumatic ports on the side	105
		NAU-...	Pneumatic ports underneath	108
[2]	Silencer	U-...	For fitting in exhaust ports	silencer
[3]	Push-in fitting	QS-...	For connecting tubing with standard O.D.	qs
[4]	Pneumatic valve	VL-...	Port pattern to ISO 5599-1	88
		J-...	Port pattern to ISO 5599-1	88
		JD-...	Port pattern to ISO 5599-1	88

Peripherals overview

Manifold assembly

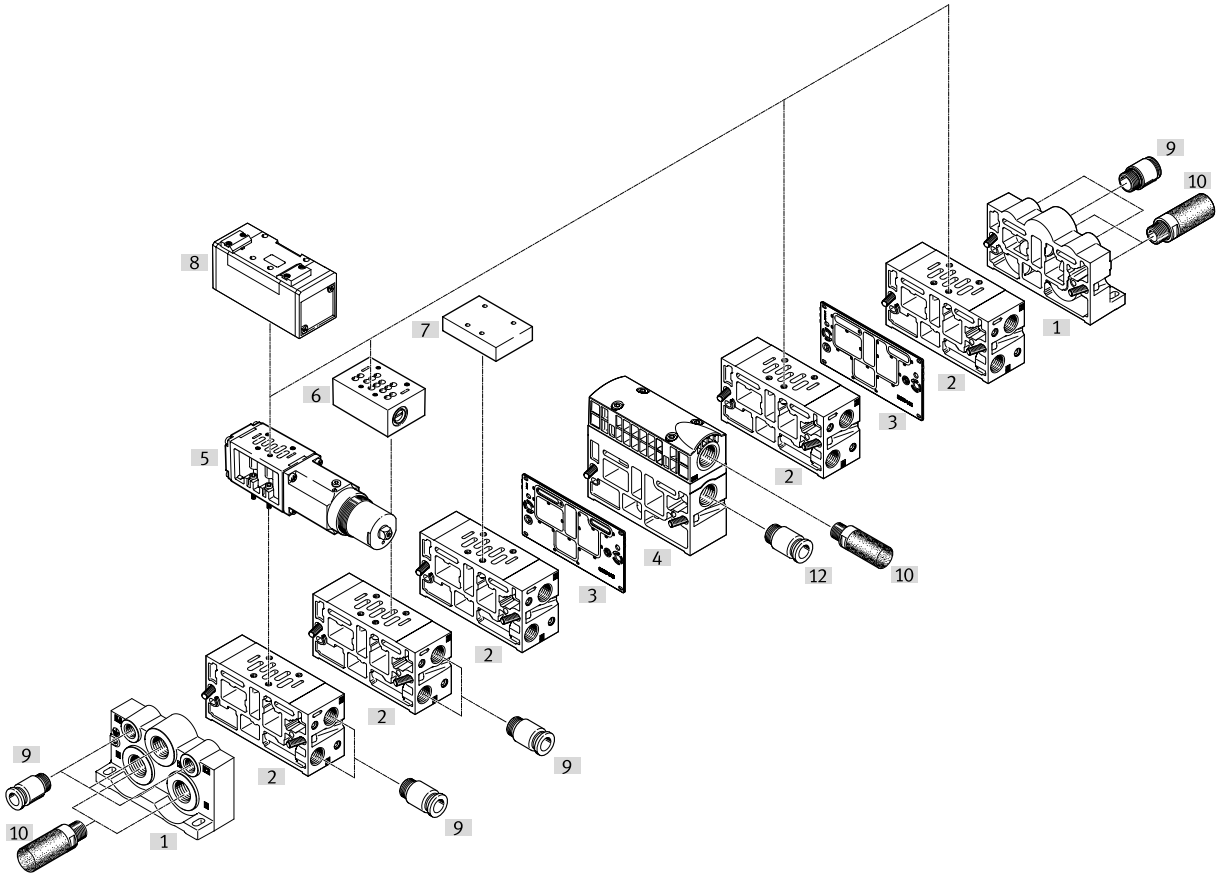

Individual components

		Type	Brief description	➔ Page/Internet
[1]	End plates	VABE-S1-...	For sealing the manifold sub-bases	117
[2]	Manifold sub-base	VABV-S1-...	With ports 2 and 4	110
[3]	Duct separation	VABD-S1-1-...	For sealing ducts 1, 3, 5, 12 and 14 between end plate and manifold sub-base, e.g. to create pressure zones	121
[4]	Supply plate	VABF-S1-1-...	With ports for air supply 1 and exhausts 3 and 5	112
[5]	Regulator plate	VABF-S1-...-R...	Pressure regulator for manually setting a particular pressure in the regulated port upstream or downstream of the valve	131
		LR-ZP-...	Pressure regulator for manually setting a particular pressure in the regulated port upstream or downstream of the valve	131
[6]	Throttle plate	VABF-S1-...-F1B1-C	Restricts the flow of exhaust air in ducts 3 and 5	124
		GRO-ZP-...	Restricts the flow of exhaust air in ducts 3 and 5	124
[7]	Cover plate	NDV-...	For sealing unused manifold sub-bases	120
[8]	Pneumatic valve	VL-...	Port pattern to ISO 5599-1	88
		J-...	Port pattern to ISO 5599-1	88
		JD-...	Port pattern to ISO 5599-1	88
[9]	Push-in fitting	QS-...	For connecting tubing with standard O.D.	qs
[10]	Silencer	U-...	For fitting in exhaust ports	silencer
[12]	Push-in fitting	QS-...	For connecting tubing with standard O.D.	qs

Peripherals overview

Manifold assembly

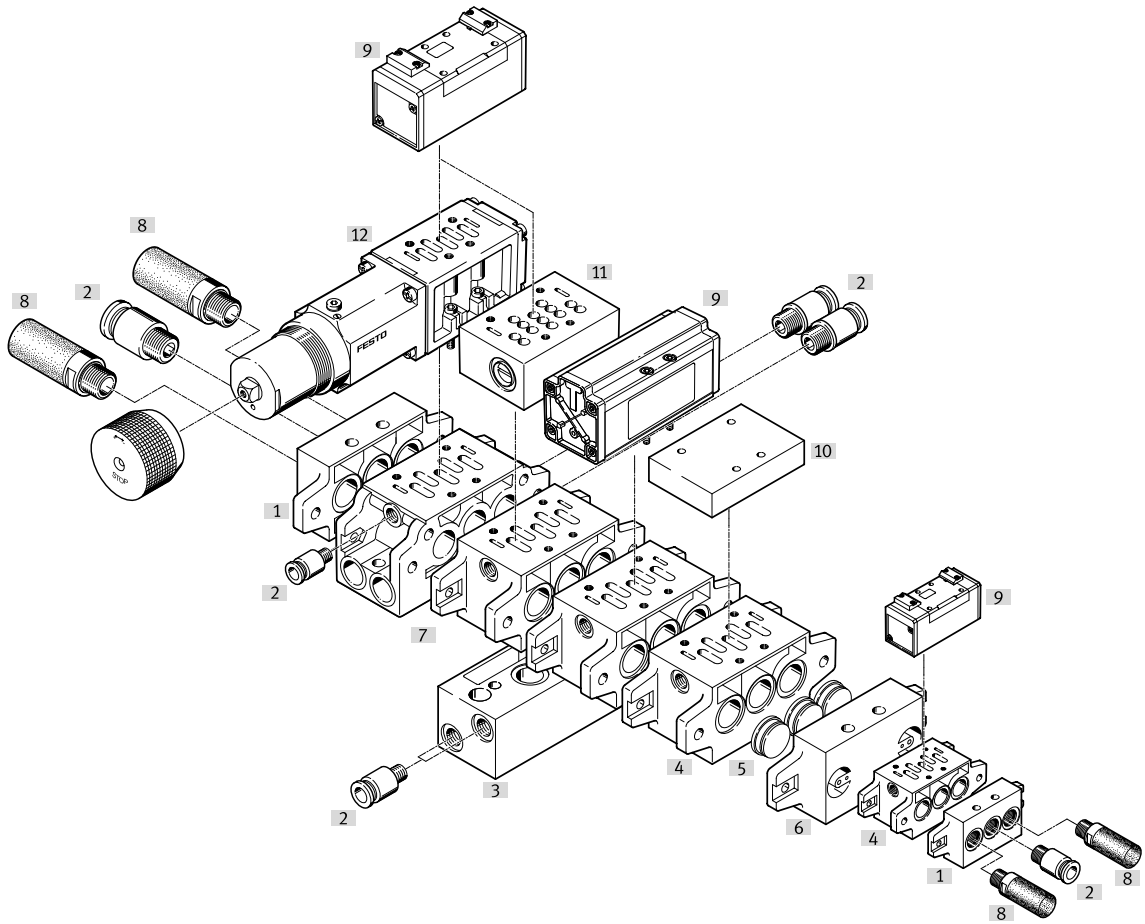

Individual components

		Type	Brief description	➔ Page/Internet
[1]	End plate kit	NEV-...	For sealing the manifold sub-bases	116
[2]	Push-in fitting	QS-...	For connecting tubing with standard O.D.	qs
[3]	90°-connection plate	NAW-...	For routing ports 2 and 4 to the front	115
[4]	Manifold sub-base	NAV-...	With ports 2 and 4 underneath	110
[5]	Isolating disc	NSC-...	For sealing ducts 1, 3, 5 between end plate and manifold sub-base, e.g. to create pressure zones	120
[6]	Intermediate plate	NZV-...	For connecting manifold sub-bases of different sizes	122
[7]	Manifold sub-base with 90° connections	NAVW-...	With ports 2 and 4 either underneath or to the front	115
[8]	Silencer	U-...	For fitting in exhaust ports	silencer
[9]	Pneumatic valve	VL-...	Port pattern to ISO 5599-1	88
		J-...	Port pattern to ISO 5599-1	88
		JD-...	Port pattern to ISO 5599-1	88
[10]	Cover plate	NDV-...	For sealing unused manifold sub-bases	120
[11]	Throttle plate	VABF-S1-...-F1B1-C	Restricts the flow of exhaust air in ducts 3 and 5	124
		GRO-ZP-...	Restricts the flow of exhaust air in ducts 3 and 5	124
[12]	Regulator plate	VABF-S1-...-R...	Pressure regulator for manually setting a particular pressure in the regulated port upstream or downstream of the valve	131
		LR-ZP-...	Pressure regulator for manually setting a particular pressure in the regulated port upstream or downstream of the valve	131

Datasheet – Width 42 mm

- Flow rate
  1200 l/min

General technical data			
Type		VL- ... -C, J ... -C	VL- ... -EX, J ... -EX
Design		Piston spool	Piston spool
Sealing principle		Soft	Soft
Actuation type		Pneumatic	Pneumatic
Type of control		Direct	Direct
Flow direction		Reversible	Reversible
		VL-5/2-D-1-C: non-reversible	VL-5/2-D-1-C-EX: non-reversible
Exhaust air function		Can be throttled	Can be throttled
Manual override		None	None
Type of mounting		On sub-base via through-hole	On sub-base via through-hole
Mounting position		Any	Any
Nominal width	[mm]	8	8
Overlap		Positive overlap	Positive overlap
Width	[mm]	42	42
Grid dimension	[mm]	43	43
Pneumatic connections		Sub-base size 1 to ISO 5599-1	Sub-base size 1 to ISO 5599-1
Noise level	[dB (A)]	85	85
Conforms to standard		ISO 5599-1	ISO 5599-1

Flow rates		
Standard nominal flow rate	[l/min]	1200

Switching times [ms]					
		Switching time on	Switching time off	Switching time changeover	Switching time changeover (dominant)
5/2-way valve, monostable	VL-5/2-D-1-C	9	18	–	–
	VL-5/2-D-1-C-EX	9	18	–	–
	VL-5/2-D-1-FR-C	6	23	–	–
	VL-5/2-D-1-FR-C-EX	6	23	–	–
5/2-way valve, bistable	J-5/2-D-1-C	–	–	6	–
	J-5/2-D-1-C-EX	–	–	6	–
	JD-5/2-D-1-C	–	–	6	4
	JD-5/2-D-1-C-EX	–	–	6	4
5/3-way valve	VL-5/3G-D-1-C	7	44	–	–
	VL-5/3G-D-1-C-EX	7	44	–	–
	VL-5/3E-D-1-C	7	45	–	–
	VL-5/3E-D-1-C-EX	7	45	–	–
	VL-5/3B-D-1-C	7	44	–	–
	VL-5/3B-D-1-C-EX	7	44	–	–

Datasheet – Width 42 mm

ATEX		
Type		VL- ... -EX, J ... -EX
ATEX category for gas		II 2G
Type of (ignition) protection for gas		Ex h IIC T4 Gb
ATEX category for dust		II 2D
Type of (ignition) protection for dust		Ex h IIIC T130°C Db
Explosion ambient temperature	[°C]	–10 <= Ta <= +60
Explosion protection certification outside EU		EPL Db (GB)
		EPL Gb (GB)
CE marking (see declaration of conformity)[1]		To EU Explosion Protection Directive (ATEX)
UKCA marking (see declaration of conformity) [1]		To UK regulations for explosions

1) Additional information: www.festo.com/catalogue/... ➔ Support/Downloads.

Operating and environmental conditions					
Valve function		5/2-way valve			5/3-way valve
		Monostable		Bistable	
		Pneumatic spring	Mechanical spring		
Operating medium		Compressed air to ISO 8573-1:2010 [7:4:4]			
Pilot medium		Compressed air to ISO 8573-1:2010 [7:4:4]			
Note on the operating/pilot medium		Lubricated operation possible (required for further operation)			
Operating pressure	[bar]	2 ... 16	–0.9 ... +16	–0.9 ... +16	–0.9 ... +16
Pilot pressure	[bar]	2 ... 16	3 ... 16	2 ... 16	3 ... 16
Ambient temperature	[°C]	–10 ... +60			
Temperature of medium	[°C]	–10 ... +60			

Safety data	
Shock resistance	Shock test with severity level 2 to FN 942017-5 and EN 60068-2-27
Vibration resistance	Transport application test with severity level 1 to FN 942017-4 and EN 60068-2-6

Materials	
Housing	Die-cast aluminium
Seals	HNBR, NBR
Note on materials	RoHS-compliant

Datasheet – Width 42 mm

Dimensions Download CAD data ➔ www.festo.com

5/2-way valves, pneumatic spring return, 5/2-way valves, bistable

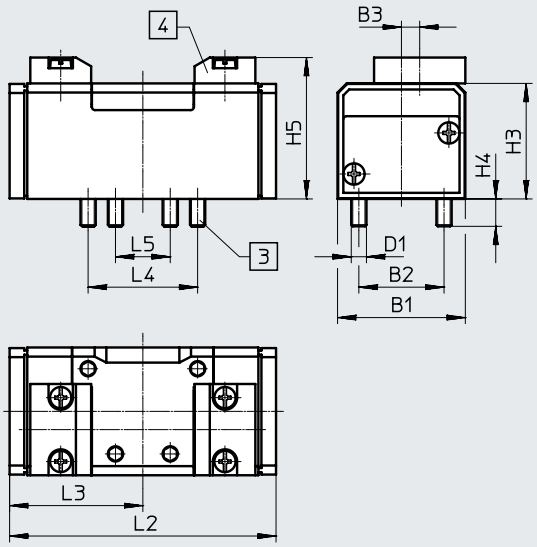

[3] Captive retaining screws
[4] Slot for inscription label

Type	B1	B2	B3	D1	H3	H4	H5	L2	L3	L4	L5
VL-5/2- ...	42	28	6	M5	38	9	46.5	87.6	43.8	36	18
J-5/2- ...											
JD-5/2- ...											

5/2-way valves, mechanical spring return

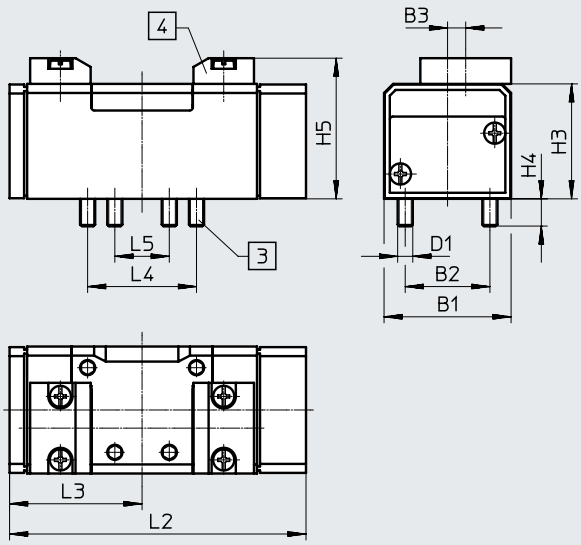

[3] Captive retaining screws
[4] Slot for inscription label

Type	B1	B2	B3	D1	H3	H4	H5	L2	L3	L4	L5
VL-5/2- ... -FR- ...	42	28	6	M5	38	9	46.5	98	43.8	36	18

Datasheet – Width 42 mm

Dimensions Download CAD data ➔ www.festo.com

5/3-way valves

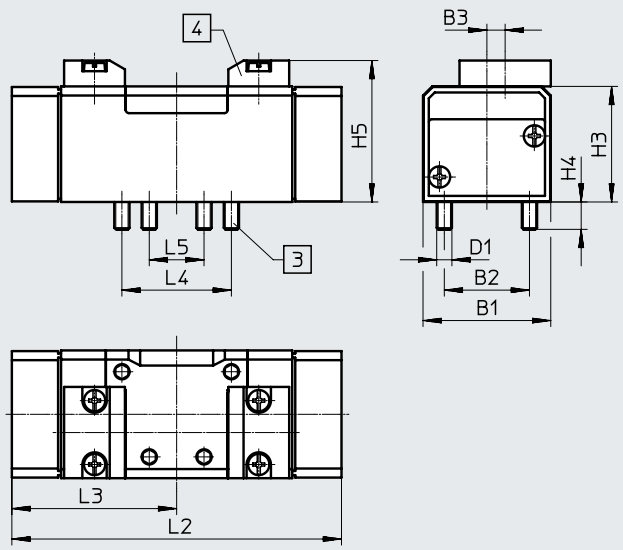

[3] Captive retaining screws
[4] Slot for inscription label

Type	B1	B2	B3	D1	H3	H4	H5	L2	L3	L4	L5
VL-5/3...	42	28	6	M5	38	9	46.5	108.4	54.2	36	18

Datasheet – Width 42 mm

Ordering data

Circuit symbol	Description		Weight [g]	Part no.	Type
5/2-way valve, monostable					
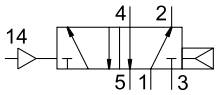	Pneumatic spring return	–	290	**151009**	**VL-5/2-D-1-C**
		ATEX category ➔ page 89	290	**536007**	**VL-5/2-D-1-C-EX**
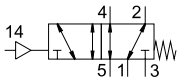	Mechanical spring return	–	290	**151014**	**VL-5/2-D-1-FR-C**
		ATEX category ➔ page 89	290	**536010**	**VL-5/2-D-1-FR-C-EX**
5/2-way valve, bistable					
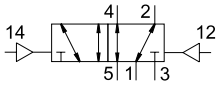	–	–	290	**151007**	**J-5/2-D-1-C**
		ATEX category ➔ page 89	290	**536013**	**J-5/2-D-1-C-EX**
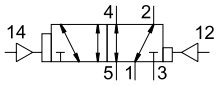	With dominant signal at 14	UL – Recognized (OL)	290	**151008**	**JD-5/2-D-1-C**
		ATEX category ➔ page 89	290	**536016**	**JD-5/2-D-1-C-EX**
5/3-way valve					
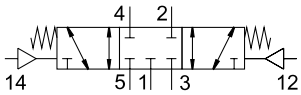	Normally closed Mechanical spring return	UL – Recognized (OL)	320	**151010**	**VL-5/3G-D-1-C**
		ATEX category ➔ page 89	320	**536019**	**VL-5/3G-D-1-C-EX**
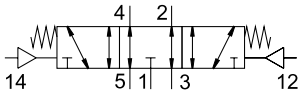	Normally exhausted Mechanical spring return	–	320	**151011**	**VL-5/3E-D-1-C**
		ATEX category ➔ page 89	320	**536022**	**VL-5/3E-D-1-C-EX**
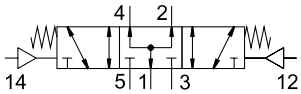	Normally pressurised Mechanical spring return	UL – Recognized (OL)	320	**151012**	**VL-5/3B-D-1-C**
		ATEX category ➔ page 89	320	**536025**	**VL-5/3B-D-1-C-EX**

Datasheet – Width 52 mm

- Flow rate
  2300 l/min

General technical data			
Type		VL- ... -C, J ... -C	VL- ... -EX, J ... -EX
Design		Piston spool	Piston spool
Sealing principle		Soft	Soft
Actuation type		Pneumatic	Pneumatic
Type of control		Direct	Direct
Flow direction		Reversible	Reversible
		VL-5/2-D-2-C: non-reversible	VL-5/2-D-2-C-EX: non-reversible
Exhaust air function		Can be throttled	Can be throttled
Manual override		None	None
Type of mounting		On sub-base, with through-hole and screw	On sub-base, with through-hole and screw
Mounting position		Any	Any
Nominal width	[mm]	11.5	11.5
Overlap		Positive overlap	Positive overlap
Width	[mm]	52	52
Grid dimension	[mm]	56	56
Pneumatic connections		Sub-base size 2 to ISO 5599-1	Sub-base size 2 to ISO 5599-1
Noise level	[dB (A)]	85	85
Conforms to standard		ISO 5599-1	ISO 5599-1

Flow rates		
Standard nominal flow rate	[l/min]	2300

Switching times [ms]					
		Switching time on	Switching time off	Switching time changeover	Switching time changeover (dominant)
5/2-way valve, monostable	VL-5/2-D-2-C	23	39	–	–
	VL-5/2-D-2-C-EX	23	39	–	–
	VL-5/2-D-2-FR-C	11	39	–	–
	VL-5/2-D-2-FR-C-EX	11	39	–	–
5/2-way valve, bistable	J-5/2-D-2-C	–	–	8	–
	J-5/2-D-2-C-EX	–	–	8	–
	JD-5/2-D-2-C	–	–	8	8
	JD-5/2-D-2-C-EX	–	–	8	8
5/3-way valve	VL-5/3G-D-2-C	15	56	–	–
	VL-5/3G-D-2-C-EX	15	56	–	–
	VL-5/3E-D-2-C	16	59	–	–
	VL-5/3E-D-2-C-EX	16	59	–	–
	VL-5/3B-D-2-C	15	57	–	–
	VL-5/3B-D-2-C-EX	15	57	–	–

Datasheet – Width 52 mm

ATEX		
Type		VL- ... -EX, J ... -EX
ATEX category for gas		II 2G
Type of (ignition) protection for gas		Ex h IIC T4 Gb
ATEX category for dust		II 2D
Type of (ignition) protection for dust		Ex h IIIC T130°C Db
Explosion ambient temperature	[°C]	–10 <= Ta <= +60
Explosion protection certification outside EU		EPL Db (GB)
		EPL Gb (GB)
CE marking (see declaration of conformity)[1]		To EU Explosion Protection Directive (ATEX)
UKCA marking (see declaration of conformity) [1]		To UK regulations for explosions

1) Additional information: www.festo.com/catalogue/... ➔ Support/Downloads.

Operating and environmental conditions					
Valve function		5/2-way valve			5/3-way valve
		Monostable		Bistable	
		Pneumatic spring	Mechanical spring		
Operating medium		Compressed air to ISO 8573-1:2010 [7:4:4]			
Pilot medium		Compressed air to ISO 8573-1:2010 [7:4:4]			
Note on the operating/pilot medium		Lubricated operation possible (required for further operation)			
Operating pressure	[MPa]	0.2 ... 1.6	–0.09 ... +1.6	–0.09 ... +1.6	–0.09 ... +1.6
	[bar]	2 ... 16	–0.9 ... +16	–0.9 ... +16	–0.9 ... +16
Pilot pressure	[bar]	2 ... 16	3 ... 16	2 ... 16	3 ... 16
Ambient temperature	[°C]	–10 ... +60			
Temperature of medium	[°C]	–10 ... +60			

Safety data	
Shock resistance	Shock test with severity level 2 to FN 942017-5 and EN 60068-2-27
Vibration resistance	Transport application test with severity level 1 to FN 942017-4 and EN 60068-2-6

Materials	
Housing	Die-cast aluminium
Seals	HNBR, NBR
Note on materials	RoHS-compliant
LABS (PWIS) conformity	VDMA24364-B1/B2-L

Datasheet – Width 52 mm

Dimensions Download CAD data ➔ www.festo.com

5/2-way valves, pneumatic spring return, 5/2-way bistable valves

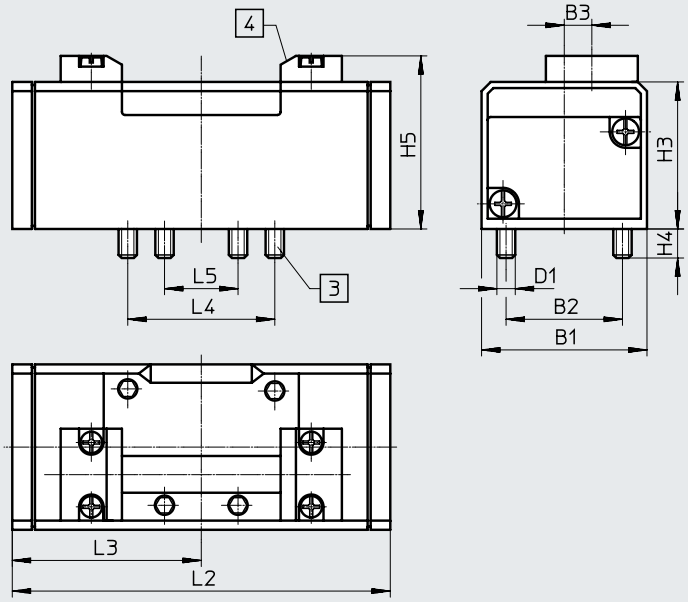

[3] Captive retaining screws
[4] Slot for inscription label

Type	B1	B2	B3	D1	H3	H4	H5	L2	L3	L4	L5
VL-5/2- ...	54	38	9	M6	48	9.5	56.5	123.4	61.7	48	24
J-5/2- ...											
JD-5/2- ...											

5/2-way valves, mechanical spring return

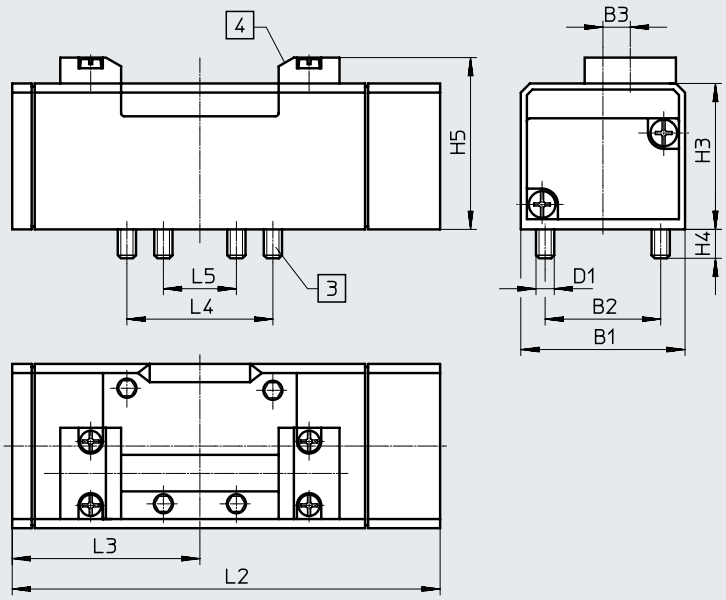

[3] Captive retaining screws
[4] Slot for inscription label

Type	B1	B2	B3	D1	H3	H4	H5	L2	L3	L4	L5
VL-5/2- ... -FR- ...	54	38	9	M6	48	9.5	56.5	140.7	61.7	48	24

Datasheet – Width 52 mm

Dimensions Download CAD data ➔ www.festo.com

5/3-way valves

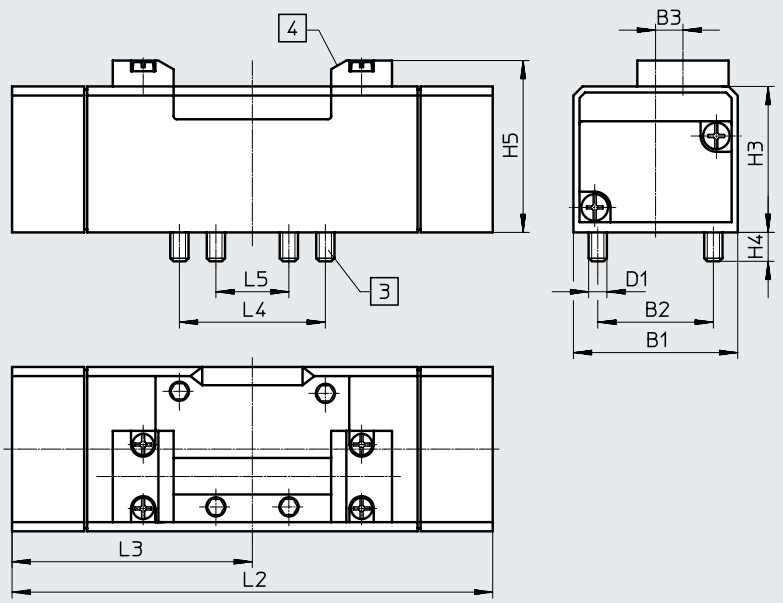

[3] Captive retaining screws
[4] Slot for inscription label

Type	B1	B2	B3	D1	H3	H4	H5	L2	L3	L4	L5
VL-5/3...	54	38	9	M6	48	9.5	56.5	158	79	48	24

Datasheet – Width 52 mm

Ordering data

Circuit symbol	Description		Weight [g]	Part no.	Type
5/2-way valve, monostable					
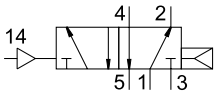	Pneumatic spring return	UL – Recognized (OL)	550	**151845**	**VL-5/2-D-2-C**
		ATEX category ➔ page 94	550	**536008**	**VL-5/2-D-2-C-EX**
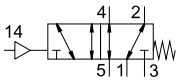	Mechanical spring return	UL – Recognized (OL)	550	**151844**	**VL-5/2-D-2-FR-C**
		ATEX category ➔ page 94	550	**536011**	**VL-5/2-D-2-FR-C-EX**
5/2-way valve, bistable					
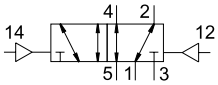	–	–	550	**151846**	**J-5/2-D-2-C**
		ATEX category ➔ page 94	550	**536014**	**J-5/2-D-2-C-EX**
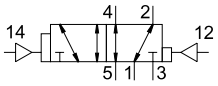	With dominant signal at 14	UL – Recognized (OL)	550	**151847**	**JD-5/2-D-2-C**
		ATEX category ➔ page 94	550	**536017**	**JD-5/2-D-2-C-EX**
5/3-way valve					
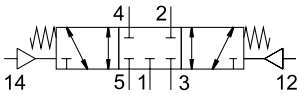	Normally closed Mechanical spring return	UL – Recognized (OL)	825	**151848**	**VL-5/3G-D-2-C**
		ATEX category ➔ page 94	825	**536020**	**VL-5/3G-D-2-C-EX**
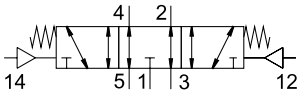	Normally exhausted Mechanical spring return	UL – Recognized (OL)	825	**151849**	**VL-5/3E-D-2-C**
		ATEX category ➔ page 94	825	**536023**	**VL-5/3E-D-2-C-EX**
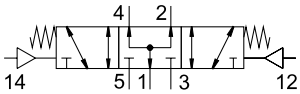	Normally pressurised Mechanical spring return	UL – Recognized (OL)	825	**151850**	**VL-5/3B-D-2-C**
		ATEX category ➔ page 94	825	**536026**	**VL-5/3B-D-2-C-EX**

Datasheet – Width 65 mm

- Flow rate
  Up to 4600 l/min

General technical data			
Type		VL- ... -C, J ... -C	VL- ... -EX, J ... -EX
Design		Piston spool	Piston spool
Sealing principle		Soft	Soft
Actuation type		Pneumatic	Pneumatic
Type of control		Direct	Direct
Flow direction		Reversible	Reversible
		VL-5/2-D-3-C: non-reversible	VL-5/2-D-3-C-EX: non-reversible
Exhaust air function		Can be throttled	Can be throttled
Manual override		None	None
Type of mounting		On sub-base, with through-hole and screw	On sub-base, with through-hole and screw
Mounting position		Any	Any
Nominal width	[mm]	14.5	14.5
Overlap		Positive overlap	Positive overlap
Width	[mm]	65	65
Grid dimension	[mm]	71	71
Pneumatic connections		Sub-base size 3 to ISO 5599-1	Sub-base size 3 to ISO 5599-1
Noise level	[dB (A)]	85	85
Conforms to standard		ISO 5599-1	ISO 5599-1

Flow rates					
Valve function		5/2-way valve	5/3-way valve		
			Normally closed	Normally exhausted	Normally pressurised
Standard nominal flow rate	[l/min]	4500	4100	4600	4100

Datasheet – Width 65 mm

Switching times [ms]		Switching time on	Switching time off	Switching time changeover	Switching time changeover (dominant)
5/2-way valve, monostable	VL-5/2-D-1-C	29	36	–	–
	VL-5/2-D-1-C-EX	29	36	–	–
	VL-5/2-D-1-FR-C	13	43	–	–
	VL-5/2-D-1-FR-C-EX	13	43	–	–
5/2-way valve, bistable	J-5/2-D-1-C	–	–	8	–
	J-5/2-D-1-C-EX	–	–	8	–
	JD-5/2-D-1-C	–	–	8	8
	JD-5/2-D-1-C-EX	–	–	8	8
5/3-way valve	VL-5/3G-D-1-C	17	61	–	–
	VL-5/3G-D-1-C-EX	17	61	–	–
	VL-5/3E-D-1-C	18	63	–	–
	VL-5/3E-D-1-C-EX	18	63	–	–
	VL-5/3B-D-1-C	16	60	–	–
	VL-5/3B-D-1-C-EX	16	60	–	–

ATEX		
Type		VL- ... -EX, J ... -EX
ATEX category for gas		II 2G
Type of (ignition) protection for gas		Ex h IIC T4 Gb
ATEX category for dust		II 2D
Type of (ignition) protection for dust		Ex h IIIC T130°C Db
Explosion ambient temperature	[°C]	–10 <= Ta <= +60
Explosion protection certification outside EU		EPL Db (GB)
		EPL Gb (GB)
CE marking (see declaration of conformity)[1]		To EU Explosion Protection Directive (ATEX)
UKCA marking (see declaration of conformity) [1]		To UK regulations for explosions

1) Additional information: www.festo.com/catalogue/... ➔ Support/Downloads.

Operating and environmental conditions					
Valve function		5/2-way valve			5/3-way valve
		Monostable		Bistable	
		Pneumatic spring	Mechanical spring		
Operating medium		Compressed air to ISO 8573-1:2010 [7:4:4]			
Pilot medium		Compressed air to ISO 8573-1:2010 [7:4:4]			
Note on the operating/pilot medium		Lubricated operation possible (required for further operation)			
Operating pressure	[MPa]	0.2 ... 1.6	–0.09 ... +1.6	–0.09 ... +1.6	–0.09 ... +1.6
	[bar]	2 ... 16	–0.9 ... +16	–0.9 ... +16	–0.9 ... +16
Pilot pressure	[bar]	2 ... 16	3 ... 16	2 ... 16	3 ... 16
Ambient temperature	[°C]	–10 ... +60			
Temperature of medium	[°C]	–10 ... +60			

Safety data	
Shock resistance	Shock test with severity level 2 to FN 942017-5 and EN 60068-2-27
Vibration resistance	Transport application test with severity level 1 to FN 942017-4 and EN 60068-2-6

Materials	
Housing	Die-cast aluminium
Seals	HNBR, NBR
Note on materials	RoHS-compliant

Datasheet – Width 65 mm

Dimensions Download CAD data ➔ www.festo.com

5/2-way valves, pneumatic spring return, 5/2-way bistable valves

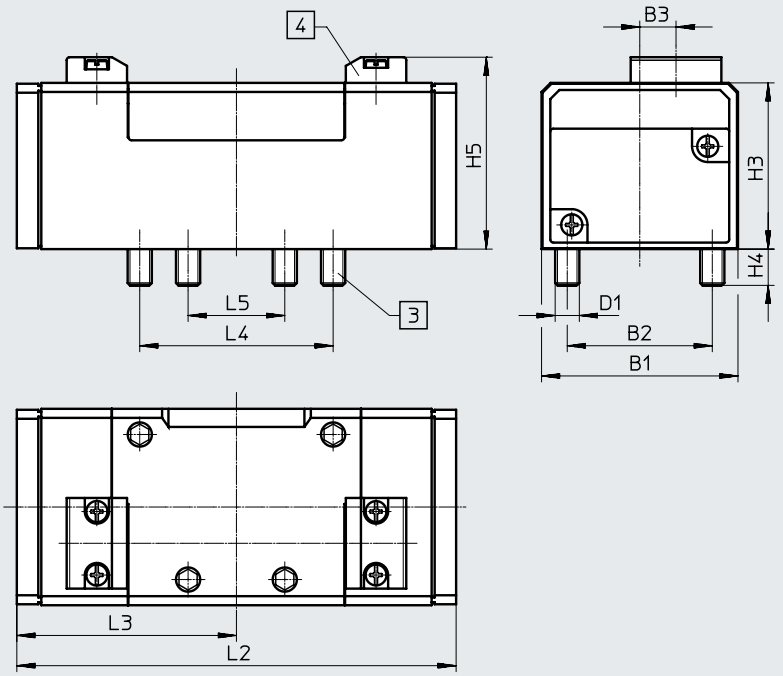

[3] Captive retaining screws
[4] Slot for inscription label

Type	B1	B2	B3	D1	H3	H4	H5	L2	L3	L4	L5
VL-5/2- ...	65	48	12	M8	55	12	63.5	145.4	72.7	64	32
J-5/2- ...											
JD-5/2- ...											

5/2-way valves, mechanical spring return

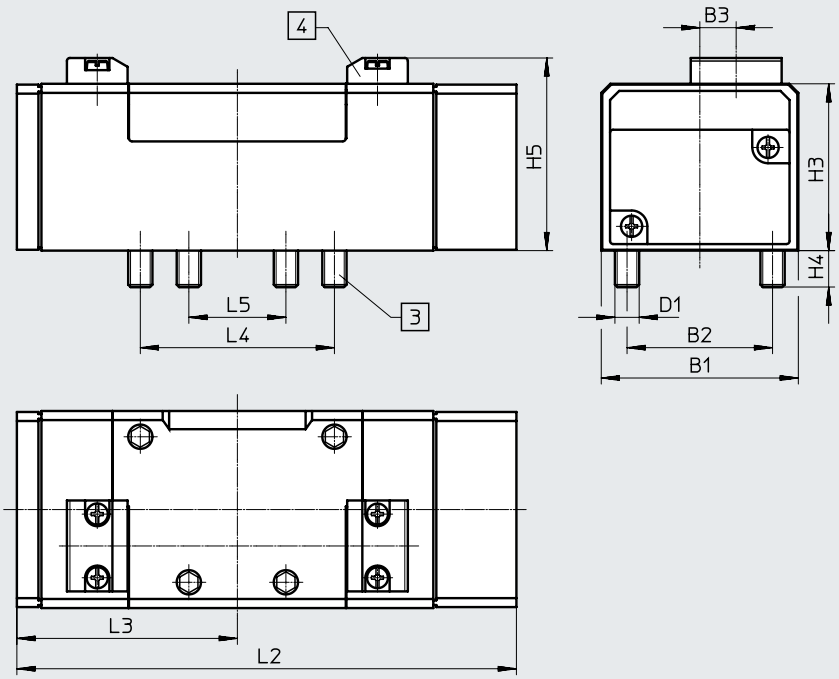

[3] Captive retaining screws
[4] Slot for inscription label

Type	B1	B2	B3	D1	H3	H4	H5	L2	L3	L4	L5
VL-5/2- ... -FR- ...	65	48	12	M8	55	12	63.5	164.7	72.7	64	32

Datasheet – Width 65 mm

Dimensions Download CAD data ➔ www.festo.com

5/3-way valves

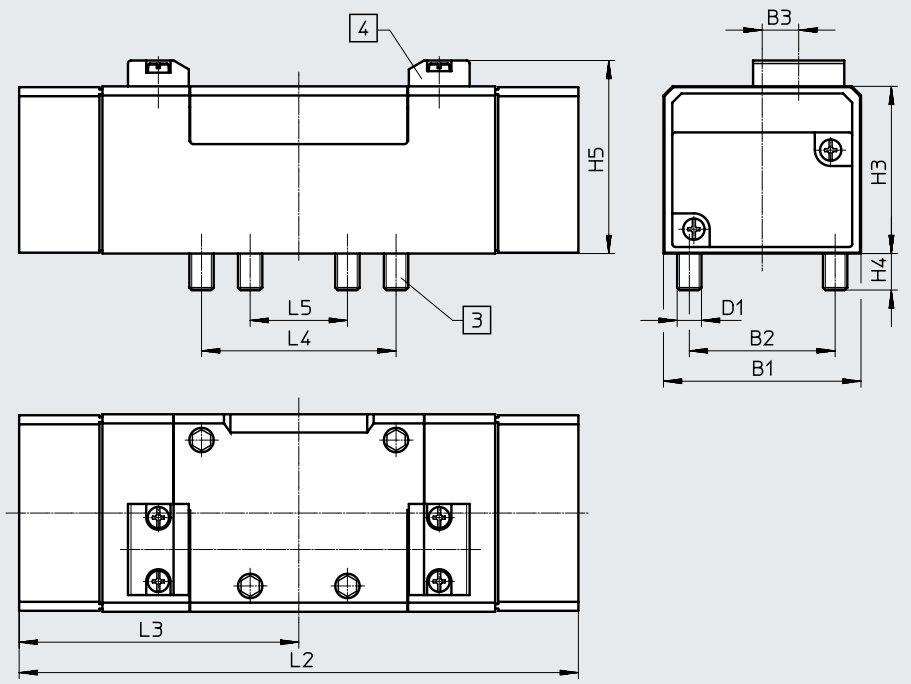

[3] Captive retaining screws
[4] Slot for inscription label

Type	B1	B2	B3	D1	H3	H4	H5	L2	L3	L4	L5
VL-5/3...	65	48	12	M8	55	12	63.5	184	92	64	32

Ordering data

Circuit symbol	Description		Weight [g]	Part no.	Type
5/2-way valve, monostable					
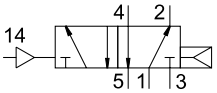	Pneumatic spring return	c UL us - Recognized (OL)	810	**151864**	**VL-5/2-D-3-C**
		ATEX category ➔ page 99	810	**536009**	**VL-5/2-D-3-C-EX**
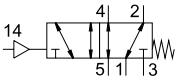	Mechanical spring return	c UL us - Recognized (OL)	810	**151863**	**VL-5/2-D-3-FR-C**
		ATEX category ➔ page 99	810	**536012**	**VL-5/2-D-3-FR-C-EX**
5/2-way valve, bistable					
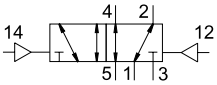	–	–	810	**151865**	**J-5/2-D-3-C**
		ATEX category ➔ page 99	810	**536015**	**J-5/2-D-3-C-EX**
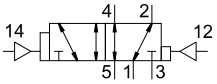	With dominant signal at 14	c UL us - Recognized (OL)	810	**151866**	**JD-5/2-D-3-C**
		ATEX category ➔ page 99	810	**536018**	**JD-5/2-D-3-C-EX**
5/3-way valve					
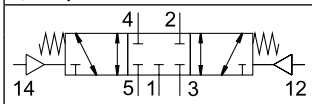	Normally closed Mechanical spring return	c UL us - Recognized (OL)	910	**151867**	**VL-5/3G-D-3-C**
		ATEX category ➔ page 99	910	**536021**	**VL-5/3G-D-3-C-EX**
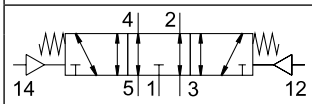	Normally exhausted Mechanical spring return	c UL us - Recognized (OL)	910	**151868**	**VL-5/3E-D-3-C**
		ATEX category ➔ page 99	910	**536024**	**VL-5/3E-D-3-C-EX**
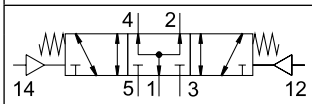	Normally pressurised Mechanical spring return	–	910	**151869**	**VL-5/3B-D-3-C**
		ATEX category ➔ page 99	910	**536027**	**VL-5/3B-D-3-C-EX**

Datasheet – Width 76 mm

- Flow rate
  Up to 6000 l/min

General technical data		
Design		Piston spool
Sealing principle		Soft
Actuation type		Pneumatic
Type of control		Direct
Flow direction		Reversible
Exhaust air function		Can be throttled
Manual override		None
Type of mounting		On sub-base, with through-hole and screw
Mounting position		Any
Nominal width	[mm]	18
Overlap		Positive overlap
Width	[mm]	76
Grid dimension	[mm]	82
Pneumatic connections		Sub-base size 4 to ISO 5599-1
Noise level	[dB (A)]	85
Conforms to standard		ISO 5599-1

Flow rates			
Valve function		5/2-way valve	5/3-way valve
Standard nominal flow rate	[l/min]	6000	4800

Switching times [ms]				
		Switching time on	Switching time off	Switching time changeover
5/2-way valve, monostable	VL-5/2-3/4-D-4	25	90	–
5/2-way valve, bistable	J-5/2-3/4-D-4	–	–	20
5/3-way valve	VL-5/3G-3/4-D-4	40	130	–
	VL-5/3E-3/4-D-4	50	170	–

Datasheet – Width 76 mm

Operating and environmental conditions				
Valve function		5/2-way valve		5/3-way valve
		Monostable	Bistable	
Operating medium		Compressed air to ISO 8573-1:2010 [7:4:4]		
Pilot medium		Compressed air to ISO 8573-1:2010 [7:4:4]		
Note on the operating/pilot medium		Lubricated operation possible (required for further operation)		
Operating pressure	[bar]	–0.9 ... +16	–0.9 ... +16	–0.9 ... +16
Pilot pressure	[bar]	3 ... 16	2 ... 16	3 ... 16
Ambient temperature	[°C]	–10 ... +60		
Temperature of medium	[°C]	–10 ... +60		

Materials	
Housing	Aluminium
Seals	NBR
Note on materials	RoHS-compliant
LABS (PWIS) conformity	VDMA24364-B1/B2-L

Dimensions Download CAD data ➔ www.festo.com

5/3-way valves

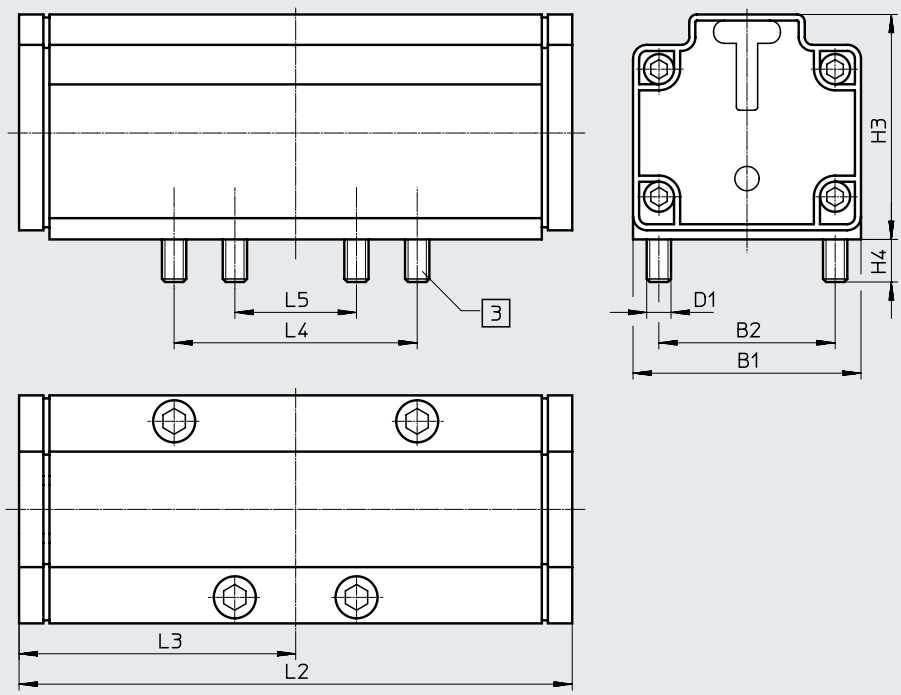

[3] Captive retaining screws

Type	B1	B2	D1	H3	H4	L2	L3	L4	L5
VL-5/2-3/4-D-4	76	58	M8	74	14	182	91	80	40
J-5/2-3/4-D-4									
VL-5/3E-3/4-D-4									
VL-5/3G-3/4-D-4									

Datasheet – Width 76 mm

Ordering data

Circuit symbol	Description	Weight [g]	Part no.	Type
5/2-way valve, monostable				
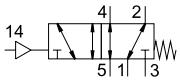	Mechanical spring return	1800	**12461**	**VL-5/2-3/4-D-4**
5/2-way valve, bistable				
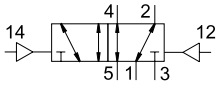	–	1800	**12462**	**J-5/2-3/4-D-4**
5/3-way valve				
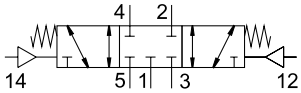	Normally closed Mechanical spring return	2000	**12463**	**VL-5/3G-3/4-D-4**
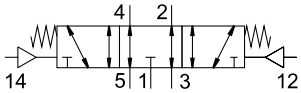	Normally exhausted Mechanical spring return	2000	**12464**	**VL-5/3E-3/4-D-4**

Accessories

Individual sub-base NAS
Sub-base VABS

Lateral connections

Materials:
Die-cast aluminium
Anodised aluminium

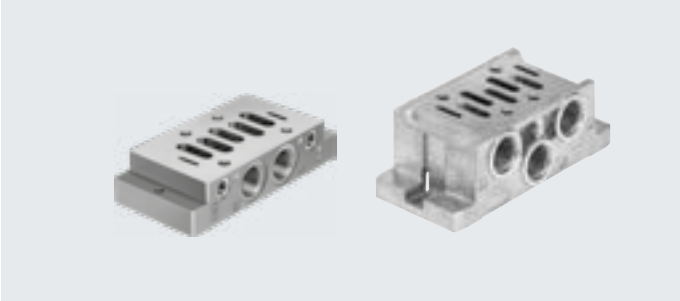

General technical data					
Type	NAS-1/4	NAS-3/8	NAS-1/2	NAS-3/4	VABS
Conforms to standard	ISO 5599-1				–
Based on standard	–				ISO 5599-1
Actuation type	–				Electrical
Sealing principle	–				Soft
Mounting position	–				Any
Suitable for vacuum	–				Yes
Type of mounting	Via through-hole				With through-hole for M5 screw

Materials					
Type	NAS-1/4	NAS-3/8	NAS-1/2	NAS-3/4	VABS
Sub-base	Die-cast aluminium			Anodised aluminium	Die-cast aluminium
Note on materials	–			–	RoHS-compliant
LABS (PWIS) conformity	–			–	VDMA24364-B1/B2-L

Operating and environmental conditions						
Type		NAS-1/4	NAS-3/8	NAS-1/2	NAS-3/4	VABS
Operating medium		–			–	Compressed air to ISO 8573-1:2010 [7:4:4]
Pilot medium		–			–	Compressed air to ISO 8573-1:2010 [7:4:4]
Note on the operating/pilot medium		–			–	Lubricated operation possible (required for further operation)
Operating pressure	[MPa]	–			–	0 ... 1.6
	[bar]	–			–	0 ... 16
Pilot pressure	[MPa]	–			–	0 ... 1
	[bar]	–			–	0 ... 10
Ambient temperature	[°C]	–			–	–10 ... +60
Temperature of medium	[°C]	–			–	–10 ... +60
Storage temperature	[°C]	–			–	–20 ... +60
Corrosion resistance class CRC[1]		–			–	0 - no corrosion stress
CE marking (see declaration of conformity)[2]		–			–	To EU Low Voltage Directive
Certification		c UL - Recognized (OL)			–	–

1) For additional information www.festo.com/x/topic/crc
2) Additional information: www.festo.com/catalogue/... ➔ Support/Downloads.

Accessories

Dimensions – Individual sub-base NAS

Download CAD data ➔ www.festo.com

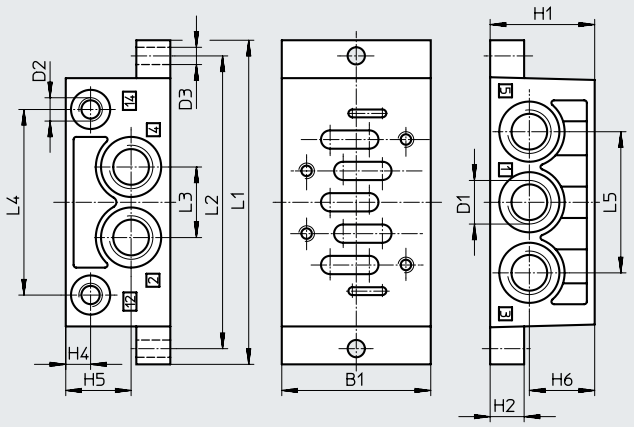

Type	B1	D1	D2	D3	H1	H2	H4	H5	H6	L1	L2	L3	L4	L5
NAS-1/4-1A-ISO	48	G1/4	G1/8	5.5	32	10	9	20.3	20.3	110	98	23	60	46
NAS-3/8-2A-ISO	57	G3/8	G1/8	6.6	40	13	9	25	25	124	112	27	71	54
NAS-1/2-3A-ISO	71	G1/2	G1/8	6.6	32	18	9	16	16	149	136	32	91	64
NAS-3/4-4A-ISO	85	G3/4	G1/8	9	42	19	9	21	21	186	170	42	111	84

Dimensions – Sub-base VABS

Download CAD data ➔ www.festo.com

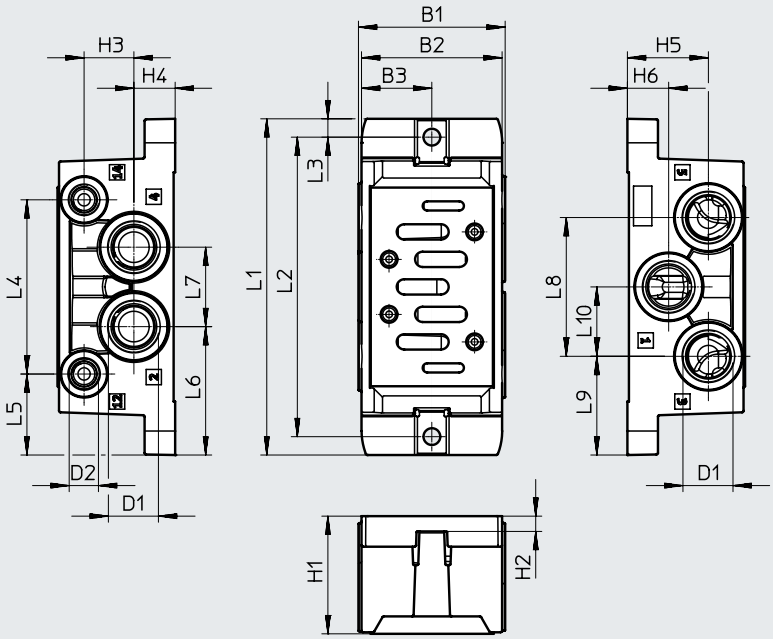

Type	B1	B2	B3	D1	D2	H1	H2	H3	H4	H5	H6
VABS-S1-1S-G38	48	46	23	G3/8	G1/8	38.5	5	16.3	13.5	26.5	13.5
VABS-S1-1S-N38				3/8 NPT	1/8 NPT						
VABS-S1-2S-G12	58	56	28	G1/2	G1/8	45	10	18	16	29	16
VABS-S1-2S-N12				1/2 NPT	1/8 NPT						

Type	L1	L2	L3	L4	L5	L6	L7	L8	L9	L10
VABS-S1-1S-G38	110	98	6	57	26.5	42	26	45.4	32.3	22.7
VABS-S1-1S-N38										
VABS-S1-2S-G12	124	112	6	72	26	46	32	55	34.5	27.5
VABS-S1-2S-N12										

Accessories

Ordering data Designation to VDMA	Width	Pneumatic port		Weight	Part no.	Type
		1, 2, 3, 4, 5	12, 14	[g]		
VDMA 24345-A-1	–	G1/4	G1/8	190	★ **9484**	**NAS-1/4-1A-ISO**
–	48 mm	G3/8	G1/8	230	**8032642**	**VABS-S1-1S-G38**
		3/8 NPT	1/8 NPT	230	**8032643**	**VABS-S1-1S-N38**
VDMA 24345-A-2	–	G3/8	G1/8	300	**11310**	**NAS-3/8-2A-ISO**
–	58 mm	G1/2	G1/8	380	**8032644**	**VABS-S1-2S-G12**
		1/2 NPT	1/8 NPT	380	**8032645**	**VABS-S1-2S-N12**
VDMA 24345-A-3	–	G1/2	G1/8	360	**10336**	**NAS-1/2-3A-ISO**
VDMA 24345-A-4	–	G3/4	G1/8	1260	**152813**	**NAS-3/4-4A-ISO**

Note: This product corresponds to ISO 1179-1 and ISO 228-1.

Accessories

Individual sub-base NAU

Connections underneath

Materials:
Die-cast aluminium
Anodised aluminium

General technical data	
Conforms to standard	ISO 5599-1
Type of mounting	Via through-hole

Materials				
Type	NAU-1/4	NAU-3/8	NAU-1/2	NAU-3/4
Sub-base	Die-cast aluminium			Anodised aluminium

Operating and environmental conditions				
Type	NAU-1/4	NAU-3/8	NAU-1/2	NAU-3/4
Certification	c UL - Recognized (OL)		–	–

Dimensions

Download CAD data ➔ www.festo.com

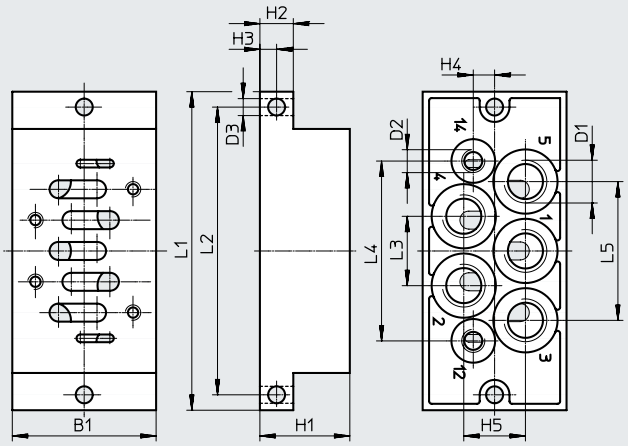

Type	B1	D1	D2	D3	H1	H2	H3	H4	H5	L1	L2	L3	L4	L5
NAU-1/4-1B-ISO	46	G1/4	G1/8	5.5	30	10	5	7.5	20	110	98	23	60.7	46
NAU-3/8-2B-ISO	56	G3/8	G1/8	6.6	35	13	6.5	8.3	24	124	112	27	70	54
NAU-1/2-3B-ISO	71	G1/2	G1/8	6.6	32	18	9	10	30	149	136	33	90	66
NAU-3/4-4B-ISO	85	G3/4	G1/8	9	28	19	9.5	12	37	186	170	42	111	84

Accessories

Ordering data Designation to VDMA	Pneumatic port		Weight	Part no.	Type
	1, 2, 3, 4, 5	12, 14	[g]		
VDMA 24345-B-1	G1/4	G1/8	–	★ **9485**	**NAU-1/4-1B-ISO**
VDMA 24345-B-2	G3/8	G1/8	450	**11416**	**NAU-3/8-2B-ISO**
VDMA 24345-B-3	G1/2	G1/8	660	**10337**	**NAU-1/2-3B-ISO**
VDMA 24345-B-4	G3/4	G1/8	1080	**152814**	**NAU-3/4-4B-ISO**

Note: This product corresponds to ISO 1179-1 and ISO 228-1.

Accessories

Manifold sub-base
NAV
VABV

Connections underneath

Materials:
Die-cast aluminium
Anodised aluminium

Dimensions NAV ➔ page123

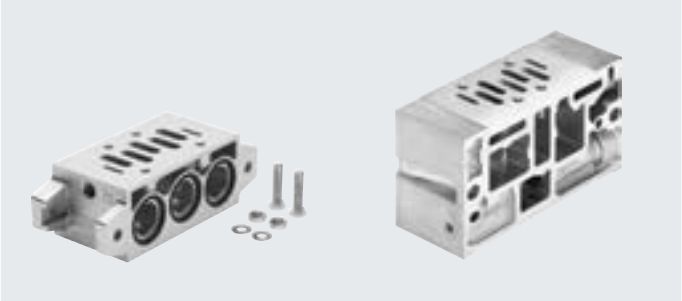

General technical data Type	NAV-1/4	NAV-3/8	NAV-1/2	NAV-3/4	VABV
Conforms to standard	ISO 5599-1				–
Based on standard	–				ISO 5599-1
Maximum number of valve positions	–				1
Suitable for vacuum	–				Yes
Exhaust air function	–				Via throttle plate

Materials Type	NAV-1/4	NAV-3/8	NAV-1/2	NAV-3/4	VABV
Sub-base	Die-cast aluminium			Anodised aluminium	Die-cast aluminium
Note on materials	–			–	RoHS-compliant
LABS (PWIS) conformity	–			–	VDMA24364-B1/B2-L

Operating and environmental conditions Type		NAV-1/4	NAV-3/8	NAV-1/2	NAV-3/4	VABV
Operating medium		–	–		–	Compressed air to ISO 8573-1:2010 [7:4:4]
Pilot medium		–	–		–	Compressed air to ISO 8573-1:2010 [7:4:4]
Note on the operating/pilot medium		–	–		–	Lubricated operation possible (required for further operation)
Operating pressure	[MPa]	–	–		–	0 ... 1
	[bar]	–	–		–	0 ... 10
Ambient temperature	[°C]	–	–		–	–10 ... +50
Temperature of medium	[°C]	–	–		–	–10 ... +50
Storage temperature	[°C]	–	–		–	–20 ... +60
Corrosion resistance class CRC[1]		–	–		–	0 - no corrosion stress
CE marking (see declaration of conformity)[2]		–	–		–	To EU Low Voltage Directive
Certification		–	UL – Recognized (OL)		–	–

1) For additional information www.festo.com/x/topic/crc
2) Additional information: www.festo.com/catalogue/... ➔ Support/Downloads.

Accessories

Dimensions – VABV

Download CAD data ➔ www.festo.com

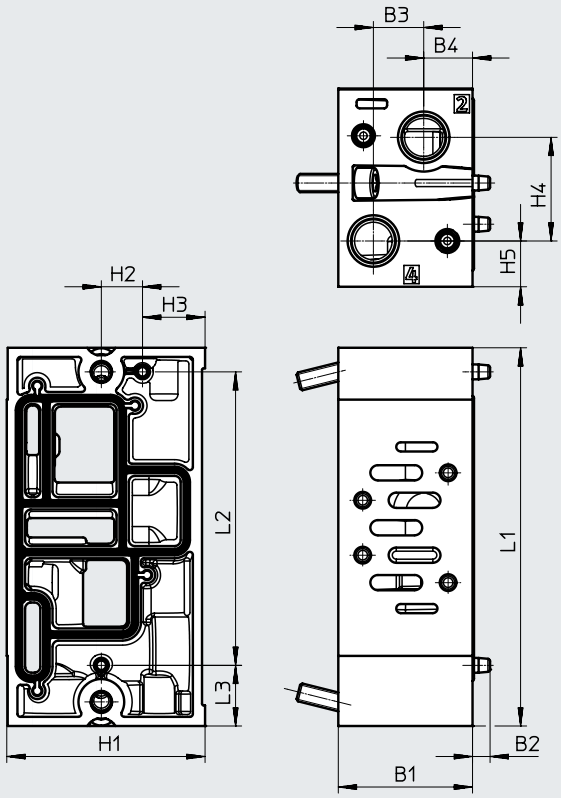

Type	B1	B2	B3	H1	H2	H3	H4	H5	L1	L2	L3
VABV-S1-1SB-G38	44	16.5	16	65	13.5	20.5	34	15	124	96.2	19.9
VABV-S1-1SB-N38											
VABV-S1-2SB-G12	59	19.5	22				35.5	14.5			
VABV-S1-2SB-N12											

Ordering data

Designation to VDMA	Width	Pneumatic port		Weight	Part no.	Type
		2, 4	12, 14	[g]		
VDMA 24345-C-1	–	G1/4	G1/8	240	★ **10173**	**NAV-1/4-1C-ISO**
–	44 mm	G3/8	–	490	**8029812**	**VABV-S1-1SB-G38**
		3/8 NPT	–	490	**8029813**	**VABV-S1-1SB-N38**
VDMA 24345-C-2	–	G3/8	G1/8	400	**11305**	**NAV-3/8-2C-ISO**
–	59 mm	G1/2	–	670	**8029814**	**VABV-S1-2SB-G12**
		1/2 NPT	–	670	**8029815**	**VABV-S1-2SB-N12**
VDMA 24345-C-3	–	G1/2	G1/8	700	**10175**	**NAV-1/2-3C-ISO**
VDMA 24345-C-4	–	G3/4	G1/8	1400	**11139**	**NAV-3/4-4C-ISO**

Accessories

Supply plate VABF

Materials:
Die-cast aluminium
Wrought aluminium alloy
PA

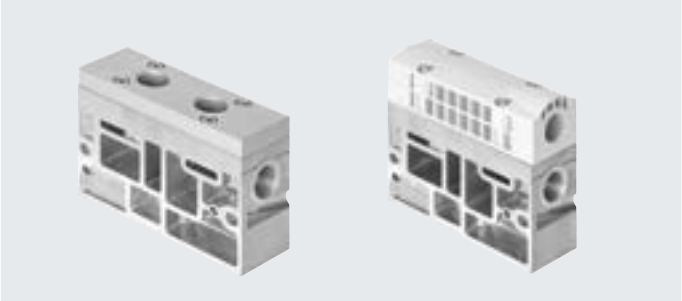

General technical data	
Based on standard	ISO 5599-1
Maximum number of valve positions	1
Suitable for vacuum	Yes
Exhaust air function	Via throttle plate

Materials		
Type	VABF-S1-1-P1A11	VABF-S1-1-P1A12
Exhaust air plate	Wrought aluminium alloy	PA
Supply plate	Anodised aluminium	Die-cast aluminium
Note on materials	RoHS-compliant	RoHS-compliant
LABS (PWIS) conformity	VDMA24364-B1/B2-L	VDMA24364-B1/B2-L

Operating and environmental conditions		
Operating medium		Compressed air to ISO 8573-1:2010 [7:4:4]
Pilot medium		Compressed air to ISO 8573-1:2010 [7:4:4]
Note on the operating/pilot medium		Lubricated operation possible (required for further operation)
Operating pressure	[MPa]	0 ... 1
	[bar]	0 ... 10
Ambient temperature	[°C]	–10 ... +50
Temperature of medium	[°C]	–10 ... +50
Storage temperature	[°C]	–20 ... +60
Corrosion resistance class CRC[1)]		0 - no corrosion stress
CE marking (see declaration of conformity)[2)]		To EU Low Voltage Directive

1) For additional information www.festo.com/x/topic/crc
2) Additional information: www.festo.com/catalogue/... → Support/Downloads.

Accessories

Dimensions Download CAD data ➔ www.festo.com

Port 3 and 5 separated

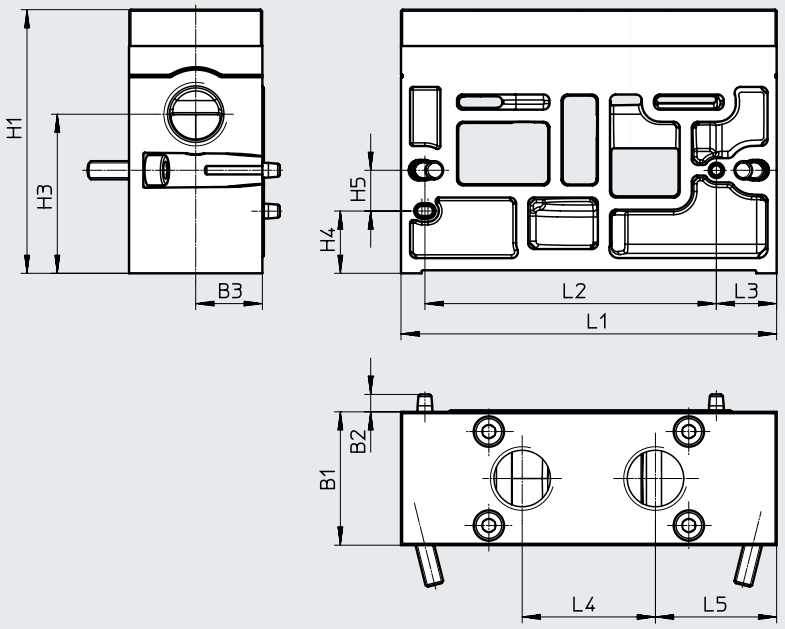

Type	B1	B2	B3	H1	H3	H4	H5	L1	L2	L3	L4	L5
VABF-S1-1-P1A11	44	5.5	22	87	52.5	20.5	13.5	124	96.2	19.9	44	40

Port 3 and 5 combined

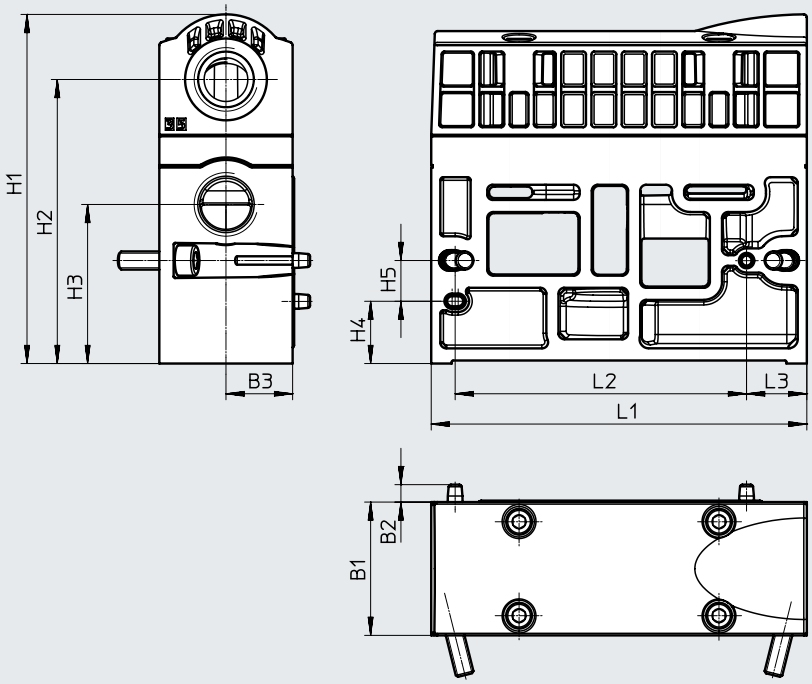

Type	B1	B2	B3	H1	H2	H3	H4	H5	L1	L2	L3
VABF-S1-1-P1A12	44	5.8	22	115.2	93.8	52.5	20.5	13.5	124	96.2	19.9

Accessories

Ordering data

Width	Description		Pneumatic port 1, 3, 5	Weight [g]	Part no.	Type
44 mm	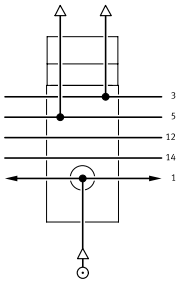	Port 3 and 5 separated	G1/2	660	**8037655**	**VABF-S1-1-P1A11-G12**
			1/2 NPT	660	**8037656**	**VABF-S1-1-P1A11-N12**
	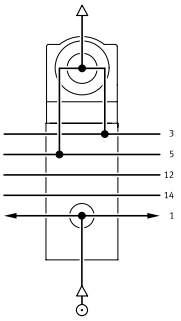	Port 3 and 5 combined	G1/2	650	**8037653**	**VABF-S1-1-P1A12-G12**
			1/2 NPT	650	**8037654**	**VABF-S1-1-P1A12-N12**

Accessories

90°-connection plate NAW

Ports on the side and on top

Materials:
Die-cast aluminium
Anodised aluminium

Dimensions ➔ page 123

General technical data	
Conforms to standard	ISO 5599-1

Operating and environmental conditions				
Type	NAW-1/4	NAW-3/8	NAW-1/2	NAW-3/4
Sub-base material	Die-cast aluminium			Anodised aluminium

Ordering data					
Designation to VDMA	Pneumatic port		Weight	Part no.	Type
	2	4	[g]		
VDMA 24345-E-1	G1/4	G1/4	360	**11304**	**NAW-1/4-1E-ISO**
VDMA 24345-E-2	G3/8	G3/8	600	**11307**	**NAW-3/8-2E-ISO**
VDMA 24345-E-3	G1/2	G1/2	920	**11309**	**NAW-1/2-3E-ISO**
VDMA 24345-E-4	G3/4	G3/4	1550	**11141**	**NAW-3/4-4E-ISO**

Manifold sub-base with 90° connections NAVW

Connections on the side and underneath

Materials:
Die-cast aluminium

Dimensions ➔ page 123

General technical data	
Conforms to standard	ISO 5599-1

Operating and environmental conditions	
Operating medium	Compressed air to ISO 8573-1:2010 [7:–:–]

Ordering data				
Pneumatic port		Weight	Part no.	Type
1, 2, 4	12, 14	[g]		
G1/4	G1/8	320	**152789**	**NAVW-1/4-1-ISO**
G3/8	G1/8	550	**152790**	**NAVW-3/8-2-ISO**
G1/2	G1/8	1020	**152791**	**NAVW-1/2-3-ISO**

Note: This product corresponds to ISO 1179-1 and ISO 228-1.

Accessories

End plate kit NEV

Materials:
Die-cast aluminium
Anodised aluminium

Dimensions NEV ➔ page 123

General technical data	
Conforms to standard	ISO 5599-1

Ordering data

Designation to VDMA	Pneumatic port 1, 3, 5	Weight [g]	Part no.	Type
VDMA 24345-D-1	G3/8	280	★ **10174**	**NEV-1DA/DB-ISO**
VDMA 24345-D-2	G1/2	450	**11306**	**NEV-2DA/DB-ISO**
VDMA 24345-D-3	G1	760	**10176**	**NEV-3DA/DB-ISO**
VDMA 24345-D-4	G1	1390	**11140**	**NEV-4DA/DB-ISO**

Note: This product corresponds to ISO 1179-1 and ISO 228-1.

Accessories

End plate VABE

Materials:
Die-cast aluminium

General technical data	
Based on standard	ISO 5599-1
Suitable for vacuum	Yes
Exhaust air function	Via throttle plate
Type of mounting	With through-hole for M6 screw

Materials	
End plate	Die-cast aluminium
Note on materials	RoHS-compliant
LABS (PWIS) conformity	VDMA24364-B1/B2-L

Operating and environmental conditions		
Operating medium		Compressed air to ISO 8573-1:2010 [7:4:4]
Pilot medium		Compressed air to ISO 8573-1:2010 [7:4:4]
Note on the operating/pilot medium		Lubricated operation possible (required for further operation)
Operating pressure	[MPa]	0 ... 1
	[bar]	0 ... 10
Ambient temperature	[°C]	–10 ... +50
Temperature of medium	[°C]	–10 ... +50
Storage temperature	[°C]	–20 ... +60
Corrosion resistance class CRC[1)]		0 - no corrosion stress
CE marking (see declaration of conformity)[2)]		To EU Low Voltage Directive

1) For additional information www.festo.com/x/topic/crc
2) Additional information: www.festo.com/catalogue/... ➔ Support/Downloads.

Accessories

Dimensions Download CAD data ➔ www.festo.com

End plate, left

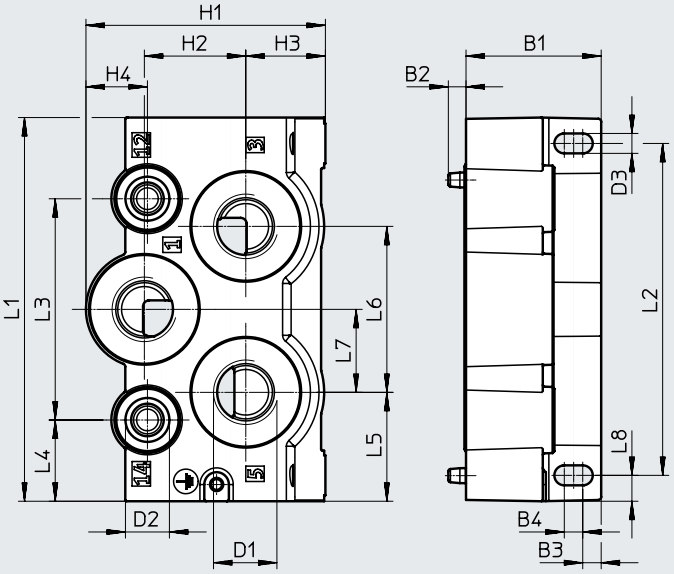

Right end plate

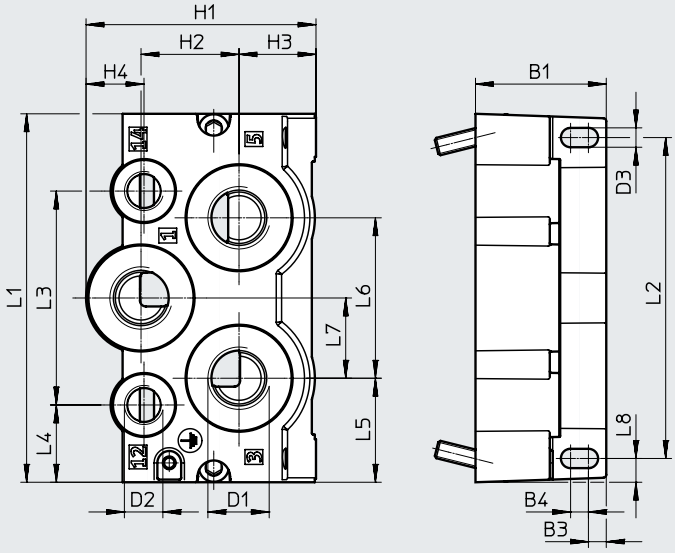

Type	B1	B2	B3	B4	D1	D2	D3	H1	H2	H3	H4	L1	L2	L3	L4	L5	L6	L7	L8
VABE-S1-1L...-G12	44	5.8	6	6	G1/2	–	6.5	77.9	33	25.9	20	124.9	108	72	26.4	35.4	54	27	8.4
VABE-S1-1LZ...-G12					G1/2	G1/4													
VABE-S1-1L...-N12					1/2 NPT	–													
VABE-S1-1LZ...-N12					1/2 NPT	1/4 NPT													
VABE-S1-2L...-G34					G3/4	–													
VABE-S1-2LZ...-G34					G3/4	G1/4													
VABE-S1-2L...-N34					3/4 NPT	–													
VABE-S1-2LZ...-N34					3/4 NPT	1/4 NPT													
VABE-S1-1R...-G12	44		6	6	G1/2	–	6.5	77.4	33	25.9	19.5	124	108	72	26	35	54	27	8
VABE-S1-1RZ...-G12					G1/2	G1/4													
VABE-S1-1R...-N12					1/2 NPT	–													
VABE-S1-1RZ...-N12					1/2 NPT	1/4 NPT													
VABE-S1-2R...-G34					G3/4	–													
VABE-S1-2RZ...-G34					G3/4	G1/4													
VABE-S1-2R...-N34					3/4 NPT	–													
VABE-S1-2RZ...-N34					3/4 NPT	1/4 NPT													

Accessories

Ordering data						
Width	Pneumatic port		Weight	Pilot air supply	Part no.	Type
	1, 3, 5	12, 14	[g]			
End plate, left						
44 mm	G1/2	–	400	Internal	**8032662**	**VABE-S1-1L-G12**
		G1/4		External	**8032660**	**VABE-S1-1LZ-G12**
	1/2 NPT	–	400	Internal	**8032663**	**VABE-S1-1L-N12**
		1/4 NPT		External	**8032661**	**VABE-S1-1LZ-N12**
	G3/4	–	360	Internal	**8032666**	**VABE-S1-2L-G34**
		G1/4		External	**8032664**	**VABE-S1-2LZ-G34**
	3/4 NPT	–	360	Internal	**8032667**	**VABE-S1-2L-N34**
		1/4 NPT		External	**8032665**	**VABE-S1-2LZ-N34**
Right end plate						
44 mm	G1/2	–	410	Internal	**8032670**	**VABE-S1-1R-G12**
		G1/4		External	**8032668**	**VABE-S1-1RZ-G12**
	1/2 NPT	–	410	Internal	**8032671**	**VABE-S1-1R-N12**
		1/4 NPT		External	**8032669**	**VABE-S1-1RZ-N12**
	G3/4	–	370	Internal	**8032674**	**VABE-S1-2R-G34**
		G1/4		External	**8032672**	**VABE-S1-2RZ-G34**
	3/4 NPT	–	370	Internal	**8032675**	**VABE-S1-2R-N34**
		1/4 NPT		External	**8032673**	**VABE-S1-2RZ-N34**

Accessories

Cover plate NDV

Materials:
Width 42 mm, 52 mm, 65 mm:
Steel

Width 76 mm:
Wrought aluminium alloy

Dimensions ➔ page 123

General technical data	
Conforms to standard	ISO 5599-1

Operating and environmental conditions	
Operating medium	Compressed air to ISO 8573-1:2010 [7:–:–]
Note on the operating/pilot medium	Lubricated operation possible (required for further operation)

Ordering data

Width	Weight [g]	Part no.	Type
42 mm	113	★ **9489**	**NDV-1-ISO**
52 mm	166	**11308**	**NDV-2-ISO**
65 mm	314	**10340**	**NDV-3-ISO**
76 mm	1480	**11142**	**NDV-4-ISO**

Isolating disc NSC

Materials:
Wrought aluminium alloy

Dimensions ➔ 123

General technical data	
Conforms to standard	ISO 5599-1

Ordering data

Width	Pneumatic port	Weight [g]	Part no.	Type
42 mm	G1/4	6	★ **11550**	**NSC-1/4-1-ISO**
52 mm	G3/8	9.2	**11908**	**NSC-3/8-2-ISO**
65 mm	G1/2	20	**11551**	**NSC-1/2-3-ISO**
76 mm	G3/4	24	**11699**	**NSC-3/4-4-ISO**

Accessories

Duct separation VABD

Materials:
Steel, NBR

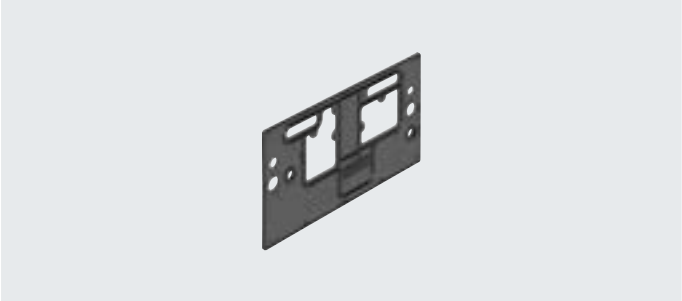

General technical data	
Based on standard	ISO 5599-1
Suitable for vacuum	Yes
Exhaust air function	Via throttle plate
Type of mounting	With through-hole for M6 screw

Materials	
Separator plate	Steel
	NBR
Note on materials	RoHS-compliant
LABS (PWIS) conformity	VDMA24364-B1/B2-L

Operating and environmental conditions		
Operating medium		Compressed air to ISO 8573-1:2010 [7:4:4]
Pilot medium		Compressed air to ISO 8573-1:2010 [7:4:4]
Note on the operating/pilot medium		Lubricated operation possible (required for further operation)
Operating pressure	[MPa]	0 ... 1
	[bar]	0 ... 10
Ambient temperature	[°C]	–10 ... +50
Temperature of medium	[°C]	–10 ... +50
Storage temperature	[°C]	–20 ... +60
Corrosion resistance class CRC[1)]		0 - no corrosion stress
CE marking (see declaration of conformity)[2)]		To EU Low Voltage Directive

1) For additional information www.festo.com/x/topic/crc
2) Additional information: www.festo.com/catalogue/... ➔ Support/Downloads.

Ordering data

Duct separation	Weight [g]	Part no.	Type
Duct 1	60	**8029438**	**VABD-S1-1-P1-C**
Duct 3 and duct 5	70	**8029439**	**VABD-S1-1-P2-C**
Ducts 1, 3 and 5	75	**8029440**	**VABD-S1-1-P3-C**
Ducts 1, 3, 5, 12 and 14	75	**8029441**	**VABD-S1-1-P6-C**
Duct 12 and duct 14	60	**8036068**	**VABD-S1-1-P7-C**

Accessories

Intermediate plate NZV

For connecting manifold sub-bases of different sizes

Materials:
Die-cast aluminium, anodised

General technical data	
Based on standard	ISO 5599-1

Dimensions

Download CAD data ➔ www.festo.com

NZV-1-2

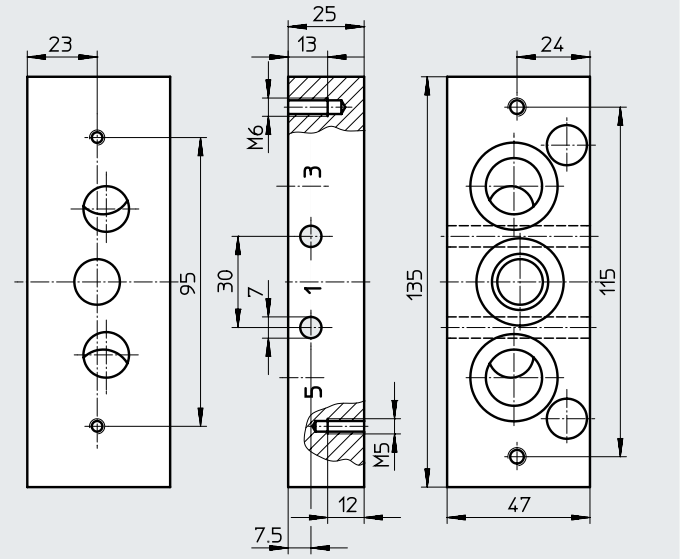

NZV-3-2/1

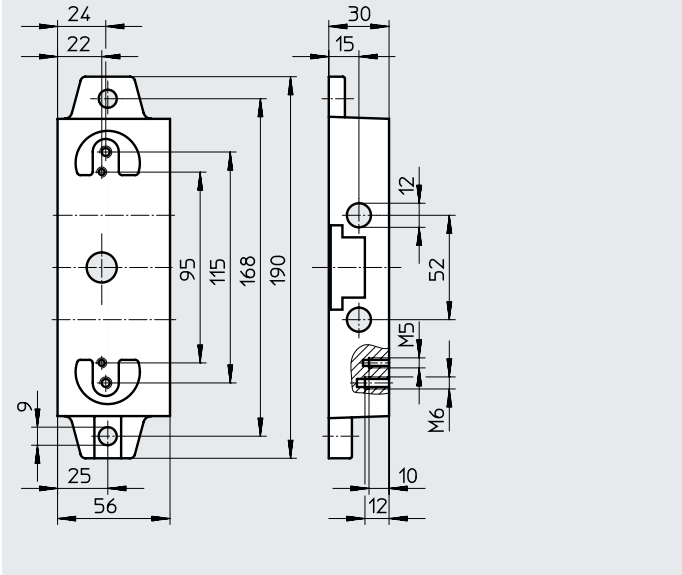

Ordering data

	Weight [g]	Part no.	Type
For manifold sub-bases of width 42 mm, 52 mm	393	**164940**	**NZV-1-2**
For manifold sub-bases of width 42 mm and 65 mm or 52 mm and 65 mm	473	**12911**	**NZV-3-2/1**

Accessories

Dimensions – Manifold assembly

Download CAD data ➔ www.festo.com

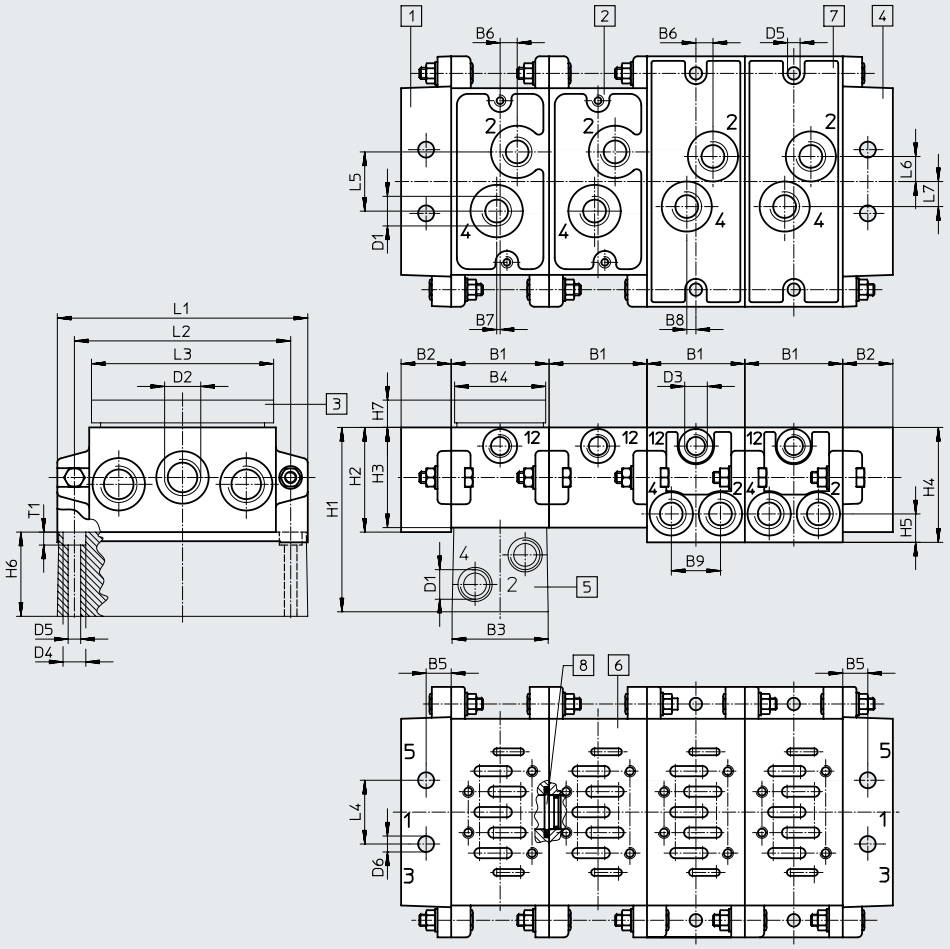

[1] Left end plate, end plate kit NEV
[2] Manifold sub-base NAV
[3] Cover plate NDV
[4] Right end plate, end plate kit NEV
[5] 90°-connection plate NAW
[6] Port pattern to ISO 5599-1
[7] Manifold sub-base with 90° connections NAVW
[8] Isolating disc NSC

Width	B1	B2	B3	B4	B5	B6	B7	B8	B9	D1	D2	D3	D4 ø	D5 ø	D6 ø
42 mm	43	22	42	40	11	7.5	1.5	4	21.6	G1/4	G3/8	G1/8	10	5.5	7
52 mm	56	26	55	50	13	6	5	6	27	G3/8	G1/2	G1/8	11	6.6	9
65 mm	71	30	70	70	15	8	6	6	35.5	G1/2	G1	G1/8	15	9	12
76 mm	82	30	80	80	15	9	8	–	–	G3/4	G1	G1/8	15	9	12

Width	H1	H2	H3	H4	H5	H6	H7	L1	L2	L3	L4	L5	L6	L7	T1
42 mm	81	46	44	50.5	12.5	37	5	110	95	80	28	26	11	11	5.7
52 mm	85	47	45	60	15	40	5	135	115	96	35	30	15	14	6.8
65 mm	99	56	54	66	17.5	45	5	190	168	120	52	38	19	19	9
76 mm	120	58	55	–	–	65	5	215	184	–	56	52	–	–	9

Note: This product corresponds to ISO 1179-1 and ISO 228-1.

Accessories

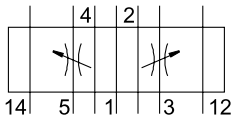

Exhaust air flow control for 3 and 5.

General technical data				
Type		VABF-S1-1-F1B1-C	VABF-S1-2-F1B1-C	GRO-ZP-3-ISO
Based on standard		ISO 5599-1		
Pneumatic vertical stacking		Throttle plate, exhaust air flow control		
Mounting position		Any		
Type of mounting		Via through-hole		
Standard nominal flow rate	[l/min]	1100	–	1500
Degree of protection		IP65	IP65	–
		NEMA4	NEMA4	–

Materials	
Housing	Die-cast aluminium
Note on materials	RoHS-compliant

Operating and environmental conditions				
Type		VABF-S1-1-F1B1-C	VABF-S1-2-F1B1-C	GRO-ZP-3-ISO
Operating medium		Compressed air to ISO 8573-1:2010 [7:4:4]		Compressed air to ISO 8573-1:2010 [7:–:–]
Note on the operating/pilot medium		Lubricated operation possible (in which case lubricated operation will always be required)		Lubricated operation possible (in which case lubricated operation will always be required)
Operating pressure	[MPa]	–0.09 ... +1	–0.09 ... +1	–
	[bar]	–0.9 ... +10	–0.9 ... +10	0 ... +16
Input pressure 1	[MPa]	–	+0.05 ... +1	–
	[bar]	–	+0.5 ... +10	–
	[psi]	–	7.25 ... 145	–
Ambient temperature	[°C]	–5 ... +50	–5 ... +50	–20 ... +80
Temperature of medium	[°C]	–	–	–20 ... +80

Accessories

Standard nominal flow rate qnN as a function of the turns n of the regulating screw

VABF-S1-1-F1B1-C

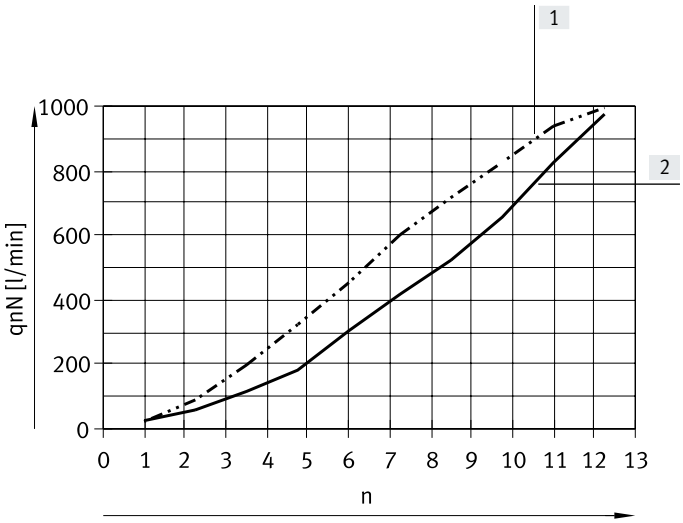

[1] Flow control screw from 4 to 5
[2] Flow control screw from 2 to 3

VABF-S1-2-F1B1-C

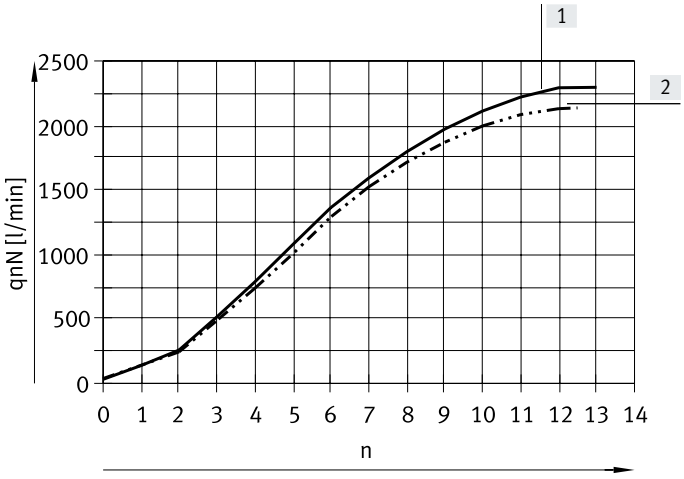

[1] Flow control screw from 2 to 3
[2] Flow control screw from 4 to 5

GRO-ZP-3-ISO

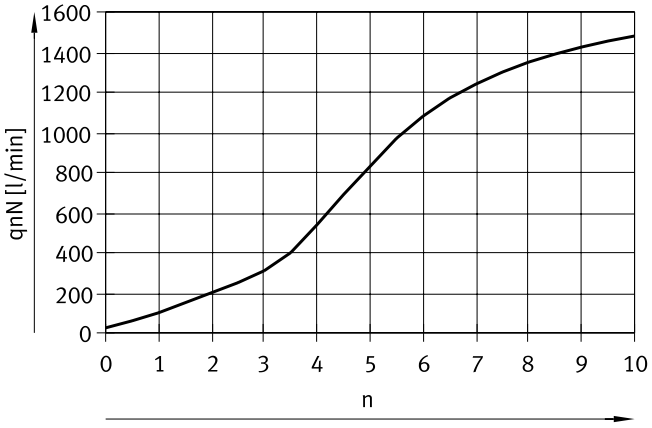

Accessories

Dimensions Download CAD data ➔ www.festo.com

VABF-S1-...

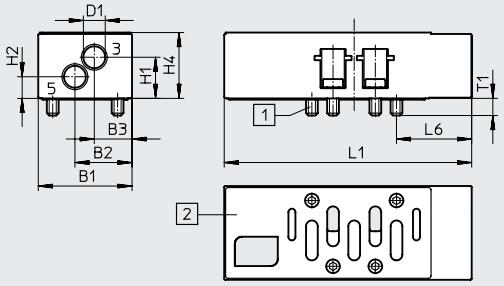

[1] Captive retaining screws
[2] Port pattern to ISO 5599-1

GRO-ZP-3-ISO

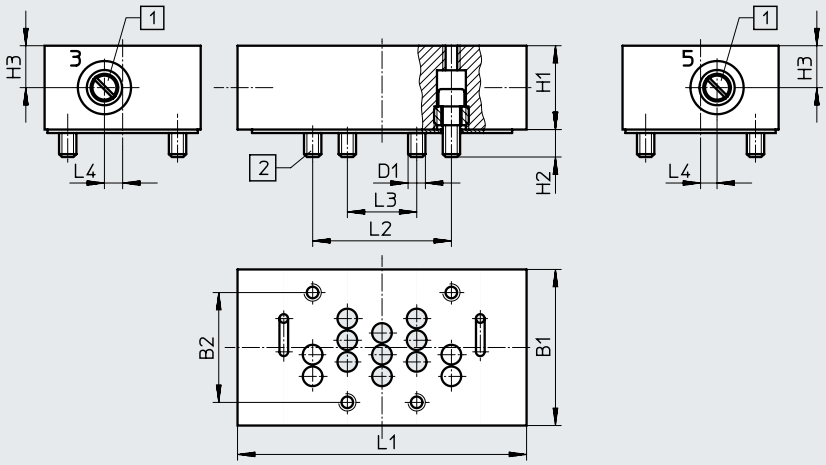

[1] Adjusting screw for flow control
[2] Captive retaining screws

Type	Width	B1	B2	B3	D1	H1	H2	H3	H4	L1	L2	L3	L5	L6	T1
VABF-S1-1-F1B1-C	42 mm	39.9	24.3	16.1	9.3	17.5	9.2	–	28	105.3	–	–	–	32	7.3
VABF-S1-2-F1B1-C	52 mm	52	32.5	22.5	13.4	29.5	13.5	–	45	131	–	–	–	40.9	10
GRO-ZP-3-ISO	65 mm	70	48	–	M8	33	12	16.5	–	132	64	32	7	–	–

Ordering data

Circuit symbol	Description	Width	Weight [g]	Part no.	Type
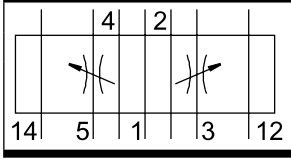	Exhaust air flow control valve	42 mm	220	**549102**	**VABF-S1-1-F1B1-C**
		52 mm	565	**555788**	**VABF-S1-2-F1B1-C**
		65 mm	850	**119674**	**GRO-ZP-3-ISO**

Accessories

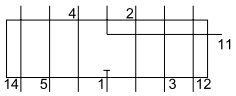

Alternative compressed air supply for port 1 of the mounted valve.

General technical data			
Type		VABF-S1-1-P1A3-G38	VABF-S1-2-P1A3-G12
Based on standard		ISO 5599-1	
Pneumatic vertical stacking		Alternative compressed air supply for 1	
Mounting position		Any	
Type of mounting		On individual sub-base, on manifold sub-base	
Standard nominal flow rate	[l/min]	1300	2800
Pneumatic port 1		G3/8	G1/2
Degree of protection		IP65	IP65
		NEMA4	NEMA4

Materials	
Housing	Die-cast aluminium
Note on materials	RoHS-compliant

Operating and environmental conditions			
Type		VABF-S1-1-P1A3-G38	VABF-S1-2-P1A3-G12
Operating medium		Compressed air to ISO 8573-1:2010 [7:4:4]	
Note on the operating/pilot medium		Lubricated operation possible (required for further operation)	
Operating pressure	[MPa]	–0.09 ... +1	–0.09 ... +1
	[bar]	–0.9 ... +10	–0.9 ... +10
Input pressure 1	[MPa]	–	+0.05 ... +1
	[bar]	–	+0.5 ... +10
	[psi]	–	7.25 ... 145
Ambient temperature	[°C]	–5 ... +50	–5 ... +50

Accessories

Dimensions Download CAD data ➔ www.festo.com

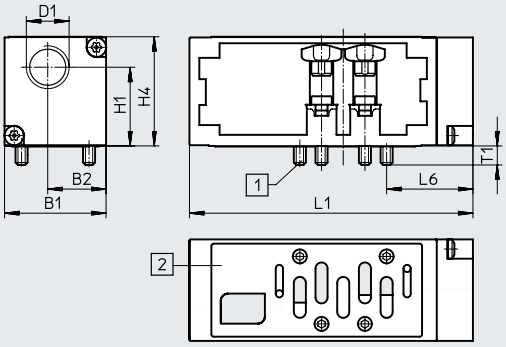

[1] Captive screws
[2] Port pattern to ISO 5599-1

Type	B1	B2	D1	H1	H4	L1	L6	T1
VABF-S1-1-P1A3-G38	42.1	24.2	G3/8	32.7	45.3	117.6	35.8	7.9
VABF-S1-2-P1A3-G12	54	31	G1/2	42.4	58.9	136	38	10

Ordering data

Circuit symbol	Description	Width	Standard nominal flow rate [l/min]	Weight [g]	Part no.	Type
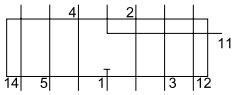	Vertical supply plate	42 mm	1300	340	**549100**	**VABF-S1-1-P1A3-G38**
		52 mm	2800	605	**555785**	**VABF-S1-2-P1A3-G12**

Accessories

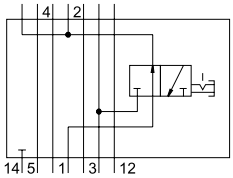

Vertical pressure shut-off plate for blocking duct 1 and duct 14 upstream of a valve.

General technical data			
Type		VABF-S1-1-L1D1-C	VABF-S1-2-L1D1-C
Based on standard		ISO 5599-1	
Pneumatic vertical stacking		Shut-off for 1	Alternative compressed air supply for 1
Mounting position		Any	
Type of mounting		On individual sub-base, on manifold sub-base	
Standard nominal flow rate	[l/min]	1200	1950
Pneumatic port 1		G3/8	G1/2
Degree of protection		IP65	IP65
		NEMA4	NEMA4

Materials	
Housing	Die-cast aluminium
Note on materials	RoHS-compliant

Operating and environmental conditions			
Type		VABF-S1-1-L1D1-C	VABF-S1-2-L1D1-C
Operating medium		Compressed air to ISO 8573-1:2010 [7:4:4]	
Note on the operating/pilot medium		Lubricated operation possible (required for further operation)	
Operating pressure	[MPa]	–0.09 ... +1	–0.09 ... +1
	[bar]	–0.9 ... +10	–0.9 ... +10
Input pressure 1	[MPa]	–	+0.05 ... +1
	[bar]	–	+0.5 ... +10
	[psi]	–	7.25 ... 145
Ambient temperature	[°C]	–5 ... +50	–5 ... +50

Accessories

Dimensions Download CAD data ➔ www.festo.com

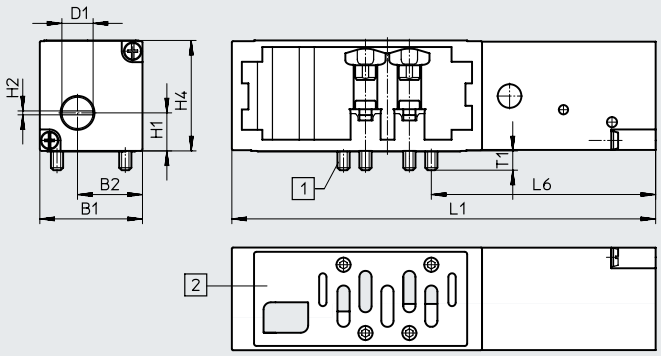

[1] Captive screws
[2] Port pattern to ISO 5599-1

Type	B1	B2	D1	H1	H2	H4	L1	L6	T1
VABF-S1-1-L1D1-C	42.1	26.7	12.8	15.6	1.6	45.3	173.8	92	7.9
VABF-S1-2-L1D1-C	54	32.6	14	21.3	1.6	58.7	191.2	93.2	10

Ordering data

Circuit symbol	Description	Width	Standard nominal flow rate [l/min]	Weight [g]	Part no.	Type
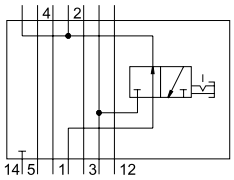	Vertical pressure shut-off plate	42 mm	1200	600	**549103**	**VABF-S1-1-L1D1-C**
		52 mm	1950	1030	**555790**	**VABF-S1-2-L1D1-C**

Accessories

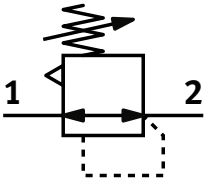

The pressure regulator enables a particular pressure in the regulated port to be set manually upstream or downstream of the valve.

General technical data				
Type		VABF-S1-1-R...	VABF-S1-2-R...	LR-ZP-...-3
Width	[mm]	42	52	65
Based on standard		ISO 5599-1	ISO 5599-1	ISO 5599-1
Pneumatic vertical stacking		Pressure regulator	Pressure regulator	Pressure regulator
Design		–	–	Piston
Regulator function		Output pressure constant	Output pressure constant	–
		With secondary exhausting	With secondary exhausting	–
Mounting position		Any	Any	–
Type of mounting		On individual sub-base	On individual sub-base	–
		On manifold sub-base	On manifold sub-base	–
Optional pressure gauge		possible	possible	–
Pressure gauge connection		With retaining clamp	With retaining clamp	–
Degree of protection		IP65	IP65	–
		NEMA4	NEMA4	–

Materials			
Type	VABF-S1-1-R...	VABF-S1-2-R...	LR-ZP-...-3
Regulator housing	Die-cast aluminium	Die-cast aluminium	Die-cast aluminium, steel
Control unit	PA	PA	–
Seals	–	–	NBR
Note on materials	RoHS-compliant	RoHS-compliant	RoHS-compliant
	Free of paint-wetting impairment substances	Free of paint-wetting impairment substances	Contains paint-wetting impairment substances

Operating and environmental conditions				
Type		VABF-S1-1-R...	VABF-S1-2-R...	LR-ZP-...-3
Operating medium		Compressed air to ISO 8573-1:2010 [7:4:4]		–
Note on the operating/pilot medium		Lubricated operation possible (in which case lubricated operation will always be required)		–
Input pressure 1	[MPa]	0.05 ... 1	0.05 ... 1	–
	[bar]	+0.5 ... +10	+0.5 ... +10	Max. 14
	[psi]	7.25 ... 145	7.25 ... 145	–
Ambient temperature	[°C]	–5 ... +50	–5 ... +50	–
Certification		–	–	UL – Recognized (OL)

Product weight				
Type		VABF-S1-1-R...	VABF-S1-2-R...	LR-ZP-...-3
Regulated port	1	640 g	1190 g	1220 g
	2	640 g	1230 g	1220 g
	4	640 g	1230 g	1220 g
	2 and 4	920 g	1990 g	1770 g

Accessories

Dimensions Download CAD data ➔ www.festo.com

VABF-S1-1-..., VABF-S1-2-...

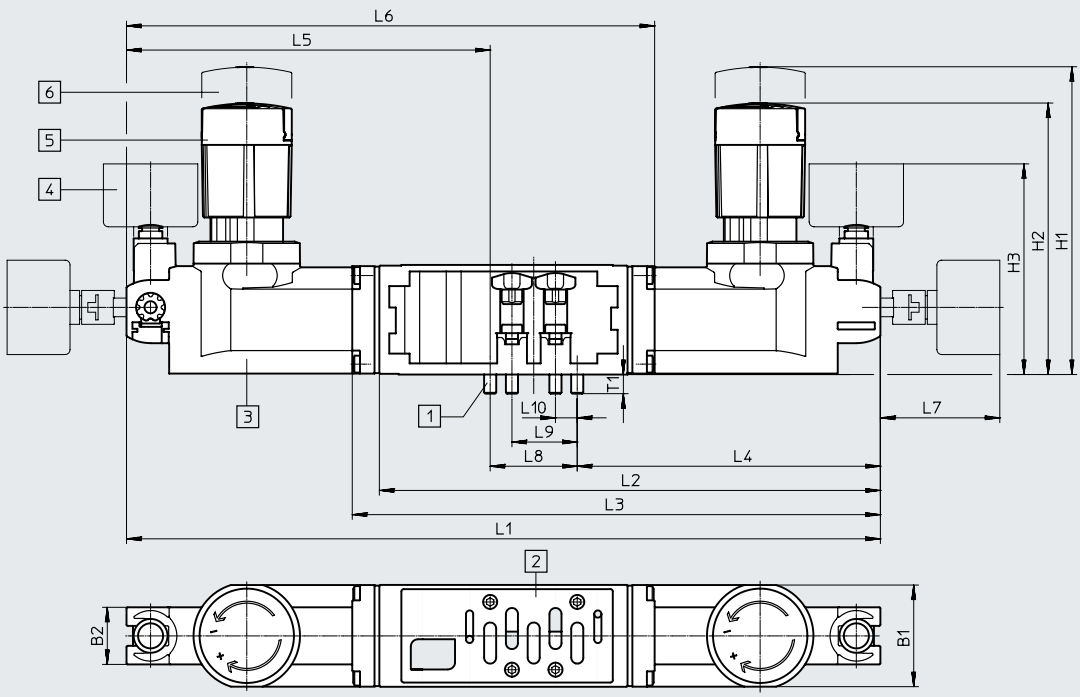

[1] Captive retaining screws
[2] Port pattern to ISO 5599-1
[3] Regulator housing
[4] Pressure gauge
[5] Regulator knob, locked
[6] Regulator knob during pressure adjustment

Type	B1	B2	H1	H2	H3	L1	L2	L3	L4	L5	L6	L7	L8	L9	L10	T1
Regulator plate, width 42 mm																
VABF-S1-1-R1...	42.1	23.6	115	112	87.1	–	207.1	–	125.3	–	–	49.4	36	27	9	7.9
VABF-S1-1-R2...						–	–	216.2	125.3	–	–					
VABF-S1-1-R3...						–	–	–	125.3	150.3	216.1					
VABF-S1-1-R4...						311.6	–	–	–	–	–					
VABF-S1-1-R5...						311.6	–	–	–	–	–					
VABF-S1-1-R6...						–	–	216.2	125.3	–	–					
VABF-S1-1-R7...						–	–	–	125.3	150.3	216.1					
Regulator plate, width 52 mm																
VABF-S1-2-R1...	54	23.6	182	167	94.4	–	250.2	–	152.2	–	–	49.4	48	38	12	10
VABF-S1-2-R2...						–	–	264.2	152.2	–	–					
VABF-S1-2-R3...						–	–	–	152.2	180.2	264.2					
VABF-S1-2-R4...						380.4	–	–	–	–	–					
VABF-S1-2-R5...						380.4	–	–	–	–	–					
VABF-S1-2-R6...						–	–	264.2	152.2	–	–					
VABF-S1-2-R7...						–	–	–	152.2	180.2	264.2					

Accessories

Dimensions Download CAD data ➔ www.festo.com

LR-ZP-...-3

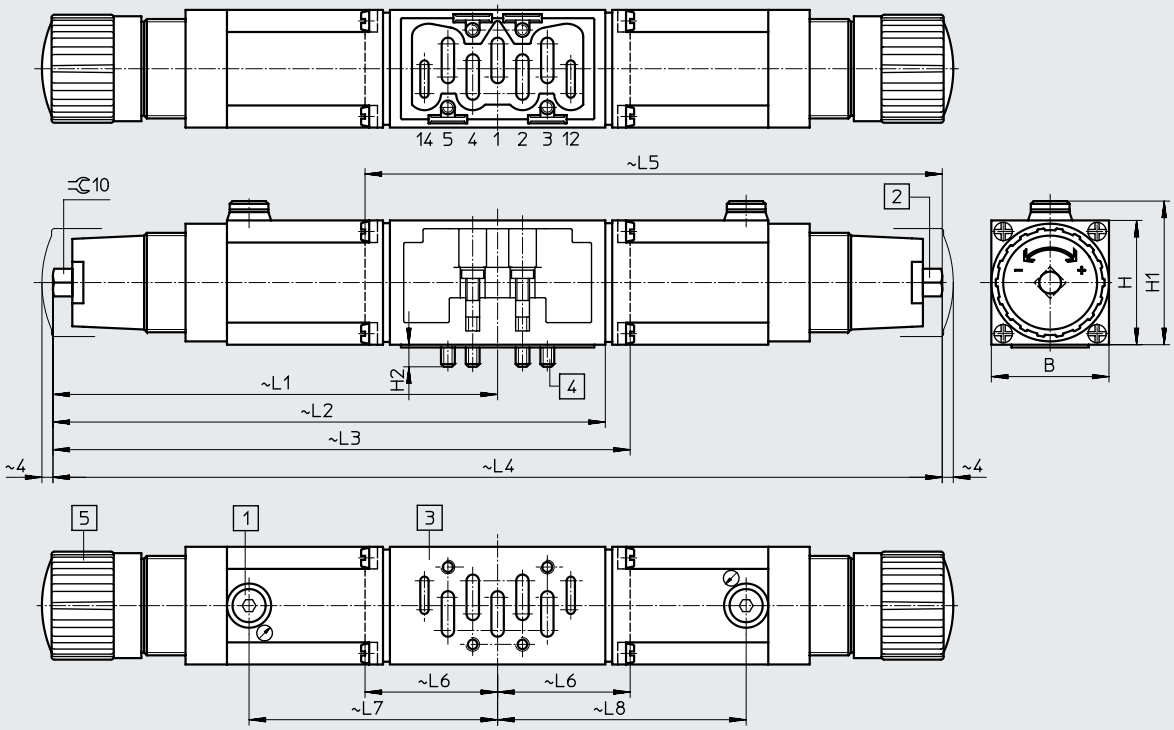

[1] Pressure gauge connection G1/8
[2] Adjusting screw
[3] Port pattern to ISO 5599-1
[4] Captive retaining screws
[5] Rotary knob

Type	B	H	H1	H2	L1	L2	L3	L4	L5	L6	L7	L8
Regulator plate, width 65 mm												
LR-ZP-P-D-3	70	63	65	14	201.5	–	274	–	–	–	119	–
LR-ZP-B-D-3					201.5	–	–	–	274	72.5	–	119
LR-ZP-A-D-3					201.5	–	–	403	–	–	119	119
LR-ZP-A/B-D-3					201.5	260	–	–	–	–	119	–

Flow rate qn as a function of output pressure p2

LR-ZP-A-D-3, LR-ZP-B-D-3, LR-ZP-A/B-D-3

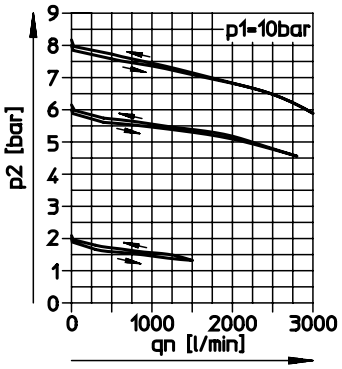

LR-ZP-P-D-3

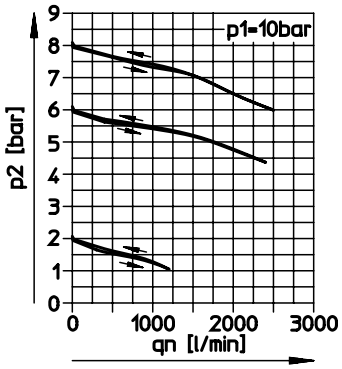

Accessories

Ordering data	Regulated port	Regulator	Control range	Part no.	Type
Regulator plate, width 42 mm					
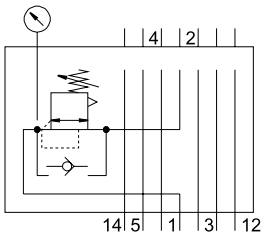	1	P	0.05 ... 0.6 MPa 0.5 ... 6 bar 7.25 ... 87 psi	**546817**	**VABF-S1-1-R1C2-C-6**
			0.05 ... 1 MPa 0.5 ... 10 bar 7.25 ... 145 psi	**546818**	**VABF-S1-1-R1C2-C-10**
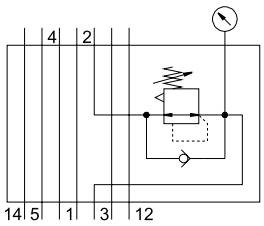	2	B	0.05 ... 0.6 MPa 0.5 ... 6 bar 7.25 ... 87 psi	**546821**	**VABF-S1-1-R2C2-C-6**
			0.05 ... 1 MPa 0.5 ... 10 bar 7.25 ... 145 psi	**546822**	**VABF-S1-1-R2C2-C-10**
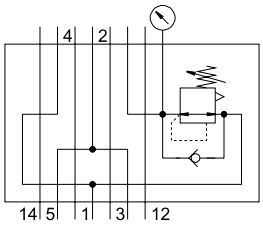	2, reversible	B	0.05 ... 0.6 MPa 0.5 ... 6 bar 7.25 ... 87 psi	**546827**	**VABF-S1-1-R6C2-C-6**
			0.05 ... 1 MPa 0.5 ... 10 bar 7.25 ... 145 psi	**546828**	**VABF-S1-1-R6C2-C-10**
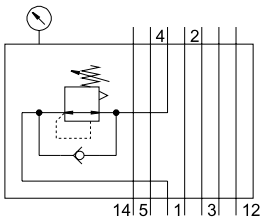	4	A	0.05 ... 0.6 MPa 0.5 ... 6 bar 7.25 ... 87 psi	**546819**	**VABF-S1-1-R3C2-C-6**
			0.05 ... 1 MPa 0.5 ... 10 bar 7.25 ... 145 psi	**546820**	**VABF-S1-1-R3C2-C-10**
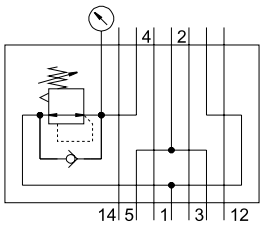	4, reversible	A	0.05 ... 0.6 MPa 0.5 ... 6 bar 7.25 ... 87 psi	**546829**	**VABF-S1-1-R7C2-C-6**
			0.05 ... 1 MPa 0.5 ... 10 bar 7.25 ... 145 psi	**546830**	**VABF-S1-1-R7C2-C-10**
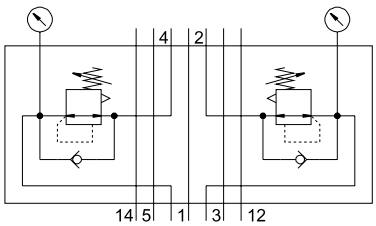	2 and 4	AB	0.05 ... 0.6 MPa 0.5 ... 6 bar 7.25 ... 87 psi	**546823**	**VABF-S1-1-R4C2-C-6**
			0.05 ... 1 MPa 0.5 ... 10 bar 7.25 ... 145 psi	**546824**	**VABF-S1-1-R4C2-C-10**
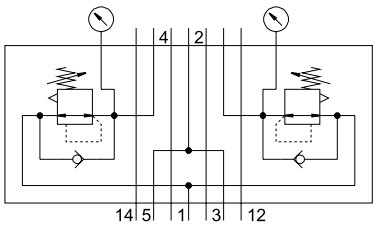	2 and 4, reversible	AB	0.05 ... 0.6 MPa 0.5 ... 6 bar 7.25 ... 87 psi	**546825**	**VABF-S1-1-R5C2-C-6**
			0.05 ... 1 MPa 0.5 ... 10 bar 7.25 ... 145 psi	**546826**	**VABF-S1-1-R5C2-C-10**

Accessories

Ordering data	Regulated port	Regulator	Control range	Part no.	Type
Regulator plate, width 52 mm					
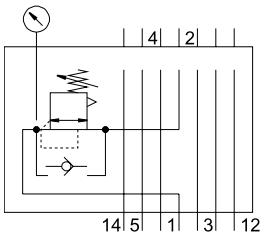	1	P	0.05 ... 0.6 MPa 0.5 ... 6 bar 7.25 ... 87 psi	**555757**	**VABF-S1-2-R1C2-C-6**
			0.05 ... 1 MPa 0.5 ... 10 bar 7.25 ... 145 psi	**555758**	**VABF-S1-2-R1C2-C-10**
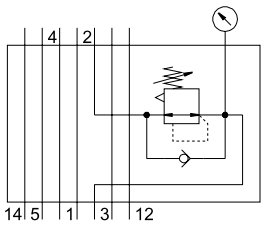	2	B	0.05 ... 0.6 MPa 0.5 ... 6 bar 7.25 ... 87 psi	**555759**	**VABF-S1-2-R2C2-C-6**
			0.05 ... 1 MPa 0.5 ... 10 bar 7.25 ... 145 psi	**555760**	**VABF-S1-2-R2C2-C-10**
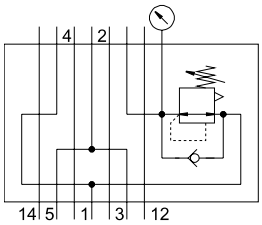	2, reversible	B	0.05 ... 0.6 MPa 0.5 ... 6 bar 7.25 ... 87 psi	**555767**	**VABF-S1-2-R6C2-C-6**
			0.05 ... 1 MPa 0.5 ... 10 bar 7.25 ... 145 psi	**555768**	**VABF-S1-2-R6C2-C-10**
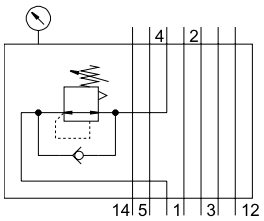	4	A	0.05 ... 0.6 MPa 0.5 ... 6 bar 7.25 ... 87 psi	**555761**	**VABF-S1-2-R3C2-C-6**
			0.05 ... 1 MPa 0.5 ... 10 bar 7.25 ... 145 psi	**555762**	**VABF-S1-2-R3C2-C-10**
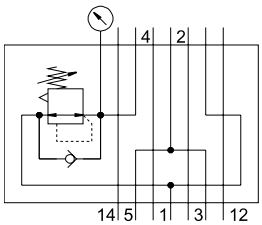	4, reversible	A	0.05 ... 0.6 MPa 0.5 ... 6 bar 7.25 ... 87 psi	**555769**	**VABF-S1-2-R7C2-C-6**
			0.05 ... 1 MPa 0.5 ... 10 bar 7.25 ... 145 psi	**555770**	**VABF-S1-2-R7C2-C-10**
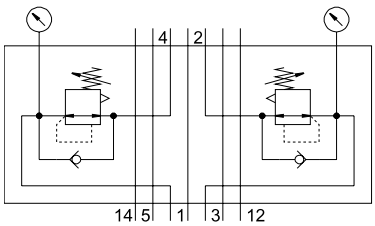	2 and 4	AB	0.05 ... 0.6 MPa 0.5 ... 6 bar 7.25 ... 87 psi	**555763**	**VABF-S1-2-R4C2-C-6**
			0.05 ... 1 MPa 0.5 ... 10 bar 7.25 ... 145 psi	**555764**	**VABF-S1-2-R4C2-C-10**
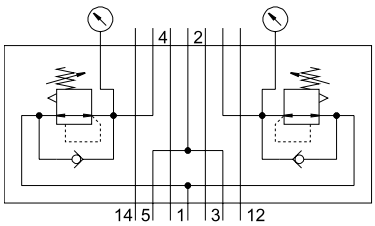	2 and 4, reversible	AB	0.05 ... 0.6 MPa 0.5 ... 6 bar 7.25 ... 87 psi	**555765**	**VABF-S1-2-R5C2-C-6**
			0.05 ... 1 MPa 0.5 ... 10 bar 7.25 ... 145 psi	**555766**	**VABF-S1-2-R5C2-C-10**

Accessories

Ordering data	Regulated port	Regulator	Control range	Part no.	Type
Regulator plate, width 65 mm					
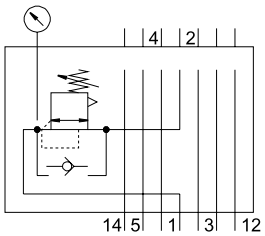	1	P	0 ... 12 bar	**35968**	**LR-ZP-P-D-3**
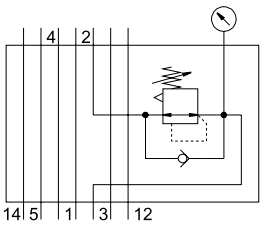	2	B	0.5 ... 12 bar	**35426**	**LR-ZP-B-D-3**
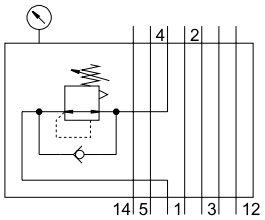	4	A	0.5 ... 12 bar	**35971**	**LR-ZP-A-D-3**
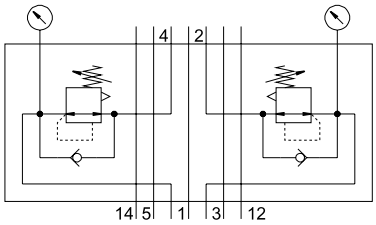	2, 4	AB	0.5 ... 12 bar	**35429**	**LR-ZP-A/B-D-3**

Ordering data – Accessories	Width	Weight [g]	Part no.	Type
Pressure gauge for intermediate pressure regulator plates LR-ZP	65 mm	64.5	**345395**	**MA-40-16-1/8**

Note: This product corresponds to ISO 1179-1 and ISO 228-1.

Accessories

Ordering data	Description	Voltage	Cable length [m]	Part no.	Type
Solenoid coil MSF					
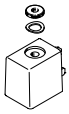	Solenoid coil	12 V DC	–	**34410**	**MSFG-12-OD**
		24 V DC and 42 V AC, 50 … 60 Hz	–	**34411**	**MSFG-24/42-50/60-OD**
		42 V DC	–	**34413**	**MSFG-42-OD**
		24 V AC	–	**34415**	**MSFW-24-5 0/60-OD**
		48 V AC, 50 … 60 Hz	–	**34418**	**MSFW-48-5 0/60-OD**
		110 V AC, 50 … 60 Hz and 120 V AC, 60 Hz	–	**34420**	**MSFW-110-5 0/60-OD**
		230 V AC, 50 … 60 Hz and 240 V AC, 60 Hz	–	**34422**	**MSFW-230-5 0/60-OD**
		240 V AC, 50 … 60 Hz	–	**34424**	**MSFW-240-5 0/60-OD**
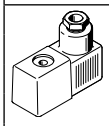	Solenoid coil with socket MSSD	12 V DC	–	**4526**	**MSFG-12**
		24 V DC and 42 V AC, 50 … 60 Hz	–	**4527**	**MSFG-2 4/42-5 0/60**
		24 V AC	–	**4534**	**MSFW-24-5 0/60**
		110 V AC, 50 … 60 Hz and 120 V AC, 60 Hz	–	**6720**	**MSFW-110-5 0/60**
		230 V AC, 50 … 60 Hz and 240 V AC, 60 Hz	–	**4540**	**MSFW-230-5 0/60**
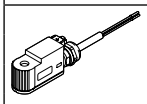	Solenoid coil for ATEX environment	24 V DC	1	**8059804**	**VACF-B-K1-1-1-EX4-M**
			5	**8059805**	**VACF-B-K1-1-5-EX4-M**
		24 V AC, 50 … 60 Hz	1	**8059808**	**VACF-B-K1-1A-1-EX4-M**
		110 V AC, 50 … 60 Hz	1	**8059811**	**VACF-B-K1-16B-1-EX4-M**
			5	**8059812**	**VACF-B-K1-16B-5-EX4-M**
		230 V AC, 50 … 60 Hz	1	**8059809**	**VACF-B-K1-3A-1-EX4-M**
			5	**8059810**	**VACF-B-K1-3A-5-EX4-M**
Solenoid coil MSN1					
	Solenoid coil	24 V DC	–	**123060**	**MSN1G-24DC-OD**
		12 V DC and 24 V AC, 50 … 60 Hz	–	**170152**	**MSN1W-24AC/12DC**
		110 V AC, 50 … 60 Hz	–	**123061**	**MSN1W-110AC-OD**
		230 V AC, 50 … 60 Hz	–	**123062**	**MSN1W-230AC-OD**

Accessories

Ordering data	Description			Cable length [m]	Part no.	Type
Electrical accessories for solenoid coil MSF						
	Angled socket	Screw terminal	Cable fitting Pg9	–	**34431**	**MSSD-F**
			Cable fitting M16	–	**59710**	**MSSD-F-M16**
		Insulation displacement technology	Cable fitting M16	–	**192746**	**MSSD-F-S-M16**
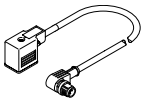	PUR cable sheath, connection technology M12x1 A-coded	24 AC/DC	• Signal status indication • Protective circuit	0.3	**3679773**	**NEBV-B2W3F-P-K-0.3-N-M12W3**
				0.6	**3679774**	**NEBV-B2W3F-P-K-0.6-N-M12W3**
		110 AC/DC	–	0.3	**3579463**	**NEBV-B2W3-K-0.3-N-M12W3**
				0.6	**3579464**	**NEBV-B2W3-K-0.6-N-M12W3**
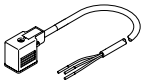	PUR cable sheath	24 AC/DC	• Signal status indication • Protective circuit	0.6	**3679778**	**NEBV-B2W3F-P-K-0.6-N-LE3**
		230 AC/DC	–	0.6	**3579468**	**NEBV-B2W3-K-0.6-N-LE3**
	PVC cable sheath	24 V DC	Signal status indication	2.5	**30935**	**KMF-1-24DC-2.5-LED**
				5	**30937**	**KMF-1-24DC-5-LED**
				10	**193458**	**KMF-1-24DC-10-LED**
		230 V AC	–	2.5	**30936**	**KMF-1-230AC-2.5**
				5	**30938**	**KMF-1-230AC-5**
	Illuminating seal	12 ... 24 V DC	Signal status indication	–	**19143**	**MF-LD-12-24DC**
		230 V DC/V AC	Signal status indication	–	**19144**	**MF-LD-230AC**
Electrical accessories for solenoid coil MSN1 and MD						
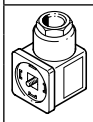	Angled socket	Screw terminal	Cable fitting Pg9	–	**34583**	**MSSD-C**
			Cable fitting M16	–	**539709**	**MSSD-C-M16**
		Insulation displacement technology	Cable fitting M16	–	**192748**	**MSSD-C-S-M16**
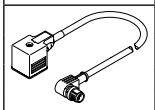	PUR cable sheath, connection technology M12x1 A-coded	24 AC/DC	• Signal status indication • Protective circuit	0.3	**3679771**	**NEBV-A1W3F-P-K-0.3-N-M12W3**
				0.6	**3679772**	**NEBV-A1W3F-P-K-0.6-N-M12W3**
		110 AC/DC	–	0.3	**3579461**	**NEBV-A1W3-K-0.3-N-M12W3**
				0.6	**3579462**	**NEBV-A1W3-K-0.6-N-M12W3**
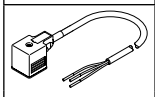	PUR cable sheath	24 AC/DC	• Signal status indication • Protective circuit	0.6	**3679776**	**NEBV-A1W3F-P-K-0.6-N-LE3**
		230 AC/DC	–	0.6	**3579466**	**NEBV-A1W3-K-0.6-N-LE3**
	PVC cable sheath	24 V DC	Signal status indication	2.5	**30931**	**KMC-1-24DC-2.5-LED**
				5	**30933**	**KMC-1-24DC-5-LED**
				10	**193459**	**KMC-1-24DC-10-LED**
		230 V AC	–	2.5	**30932**	**KMC-1-230AC-2.5**
				5	**30934**	**KMC-1-230AC-5**
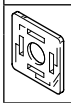	Illuminating seal	12 ... 24 V DC	Signal status indication	–	**19145**	**MC-LD-12-24DC**
		230 V DC/V AC	Signal status indication	–	**19146**	**MC-LD-230AC**
Electrical accessories for valves with square plug type B to industry standard						
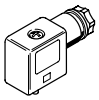	Angled socket	Via screw terminals	Cable fitting M16	–	**539710**	**MSSD-F-M16**
			Cable fitting Pg9	–	★ **34431**	**MSSD-F**
		With insulation displacement connection	Cable fitting M16	–	**192746**	**MSSD-F-S-M16**
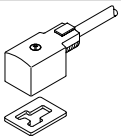	PVC cable sheath	24 V DC	Signal status indication	2.5 m	★ **30935**	**KMF-1-24DC-2.5-LED**
				5 m	**30937**	**KMF-1-24DC-5-LED**
				10 m	**193458**	**KMF-1-24-10-LED**
	Illuminating seal	24 V DC	Signal status indication	–	**19143**	**MF-LD-12-24DC**

Accessories

Ordering data				
	Description		Part no.	Type
Electrical accessories for valves with central plug				
	Angled socket, M12, 4-pin, type A, screw terminal		**12956**	**SIE-WD-TR**
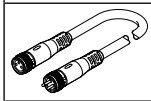	Modular system for a choice of connecting cables ➔ Internet: nebu	0.1 ... 30 m	**–**	**NEBU-...**
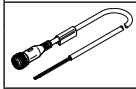	Connecting cable, straight socket, M12x1, 5-pin, open cable end, 4-wire	2.5	**550326**	**NEBU-M12G5-K-2.5-LE4**
		5	**541328**	**NEBU-M12G5-K-5-LE4**
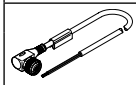	Connecting cable, angled socket, M12x1, 5-pin, open cable end, 4-wire	2.5	**550325**	**NEBU-M12W5-K-2.5-LE4**
		5	**541329**	**NEBU-M12W5-K-5-LE4**
Pressure gauge				
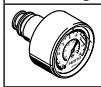	With cartridge connector, for pressure regulator	Display range 0 ... 16 bar	**543487**	**PAGN-26-16-P10**
		Display range 0 ... 10 bar	**543488**	**PAGN-26-10-P10**
Seal				
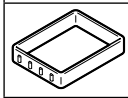	Enables the valves with central plug M12, 3-pin, to be mounted on the sub-bases of the valve terminal VTS/VTSA-F		**571343**	**VABD-S2-1-S-C**
Inscription label				
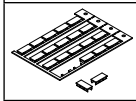	Inscription label for valves, pack size 24		**161937**	**IBS-9x17**
	Clip-on inscription label holder for valve cap, for valves with central plug M12, 3-pin		**540888**	**ASCF-T-S6**
Manual override				
	For manual override, non-detenting or covered	For valves with square plug type B to industry standard	**8049538**	**VAMC-B10-20-CH2-S**
	Cover cap for manual override, non-detenting	For valves with central plug M12, 3-pin	**541010**	**VAMC-S6-CH**
	Cover cap for manual override, concealed	For valves with central plug M12, 3-pin	**541011**	**VAMC-S6-CS**
	Heavy-duty cover cap for manual override, non-detenting, detenting via accessory	For valves with central plug M12, 3-pin	**4105147**	**VAMC-B-S6-CTR**
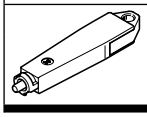	Tool for manual override	For MN1H/MFH valves	**157651**	**AHB-MD/MF/MV**
		For heavy-duty cover cap, detenting position	**1662543**	**AHB-MEB-B**