Plastic tubing, standard O.D.

★	Festo Core Range Solves the majority of your automation tasks	With the Festo Core Range, we have selected the most important products and functions from our broad product catalogue, and added the quickest delivery.
Worldwide:	Quickest delivery – wherever, whenever	The Core Range offers you the best value for your automation tasks.
Simply good:	Expected high Festo quality	
Fast:	Easy and fast to select	

Just look for the star!

Key features

Application

The requirements for pressure, temperature, flexibility and environmental influences differ from one industry sector to the next. Users frequently underestimate the risks: around 90% of all cases of damage can be traced back to the wrong choice of tubing or tubing materials. This doesn't only result in energy losses, but also in machine downtimes. It is therefore really important to find a reliable and cost-effective product that prevents the tubing getting damaged during operation.

Summary of tubing/fitting combinations

Applications	Tubing	Fitting	Description
Standard	PUN-H	QS	Maximum flexibility in standard applications thanks to an extremely wide range of options for combining the different types.
	PAN	QS	Meets all requirements, even for standard applications with increased pressure and temperature ranges.
	PEN	QS	Suitable for a wide range of tasks and attractively priced. Can be widely used thanks to materials with good resistance, easy to install. High level of abrasion resistance in dynamic applications (e.g. in energy chains).
High pressures	PAN-MF	NPQM	The tubing meets DIN standard 73378: ideal for use in mobile pneumatics. Suitable for increased temperature ranges combined with high pressure ranges.
	PAN-R	NPQH	Powerful in pressure ranges up to 20 bar, for example in applications with the pressure booster DPA.
	PUN-H-SF	NPQR	For applications with increased requirements in terms of robustness, flexibility and pressure resistance. The tubing has maximum flexibility and is resistant to kinking and hydrolysis. The combination is suitable for applications with a high moisture content.
Chemical-resistant, hydrolysis-resistant	PLN	NPQP	Resistant to cleaning agents. Easy-to-clean and economical combination, made from material listed for use in the food zone. Can be used instead of the combination with stainless steel fittings.
	PUN-H	NPCK	Hydrolysis-resistant and suitable for water applications. Corrosion-resistant and made from material listed for use in the food zone.
	PUN-H-F	NPQR	Food-safe to Regulation (EC) No. 1935/2004 and FDA-listed materials. Can be used in the food and packaging industry in combination with fittings NPQR or NPQH. The tubing is hydrolysis-resistant and is suitable for water applications. Extremely flexible and thus easy to install.
	PFAN/PTFEN	NPQH	For high temperatures up to 150°C. Resistant to cleaning agents and made from material listed for use in the food zone.
	PFAN/PTFEN	NPCK	Easy to clean thanks to the union nut's edge-free design. Maximum corrosion resistance (CRC 4), highly resistant to aggressive acids and alkalis, made from material listed for use in the food zone. Suitable for a wide range of media.
	PFAN	NPQR	Food-safe to Regulation (EC) 1935/2004 and made from FDA-listed material. For high temperatures up to 150°C. Pressure range up to 1.5 MPa. Maximum corrosion resistance (CRC 4).
Antistatic	PUN-CM	NPQM	Antistatic tubing plus solid metal fitting: maximum protection for electrical and electronic components.
Flame-retardant	PUN-V0	NPQM	Very safe in areas where there is a risk of fire thanks to flame-retardant properties.
Resistant to welding spatter	PUN-V0-C	NPQH	Ideal in the vicinity of welding spatter and safe thanks to an increased tubing wall thickness for all diameters.
	PAN-V0	QS-V0	Safe even in the vicinity of welding spatter thanks to double-walled tubing with special fitting.
Battery production	PUN-H	NPQE-F1A[1)]	Suitable in battery production areas, ideal in combination with push-in connector NPQE-F1A.

1) F1A = Free of copper, zinc and nickel

Note

Ambient conditions and the medium to be transported can have a considerable effect on the service life of plastic tubing. Based on experience, Festo recommends the following time specifications for using plastic tubing in general and in safety-related applications:

- For general applications, a minimum service life of 10 years can be expected.
- We recommend that for safety-related applications the tubing is inspected regularly, at least every 12 months.
- For applications that have an effect on the material, inspections must be carried out at suitable intervals. We recommend that the interval between inspections should be no more than 6 months, at most half of the period in which failures can occur.

Technical data

Note

Tubing that is too long, diameters that are too small, and bending radii that are too small result in flow rate losses. One of the most important rules when selecting tubing is therefore that it should be as long as necessary and as short as possible.
Make sure, therefore, that in practice tubing is loosely installed and is not stretched.

Tools for bundling tubing or for avoiding bending/pinching the tubing are available as accessories:
- Tubing strap PB
- Spiral tubing binder PKB
- Tubing support NPAW
- Tubing support PKS
- Multi-tube holder KK

Other accessories include connecting tools for tubing:
- Pipe and tubing cutter ZRS
- Tubing cutter PAN-V0S for flame-retardant plastic tubing PAN-V0
- Connecting pliers ZMS/disconnecting pliers ZDS for connecting/disconnecting the plastic tubing and barbed fitting

Suitability for contact with food

Tubing PFAN and PUN-H-F are suitable for contact with food. They have the necessary declaration of conformity in accordance with EU Regulation (EC) No. 1935/2004.

Measurement method

Flow-relevant bending radius Rd

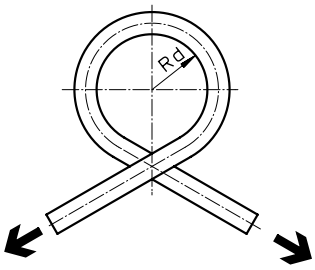

The tube is bent in the direction of its own curve until the tubing outer diameter is flattened by 5%.
Rd is then calculated mathematically.
The flow rate is not reduced until Rd is reached.

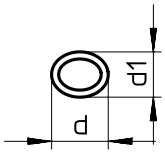

Cross-section flattened by bending the tube.
d = non-deformed tubing O.D.
d1 = deformed tubing O.D.

Minimum bending radius Rmin

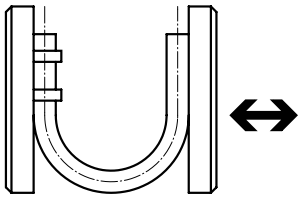

The tubing fixed to the base plate is bent until the deformation results in a kink. The measured value is the minimum bending radius Rmin. This Rmin results in significant reductions in the flow rate.

Product range overview

Type	Material	O.D. [mm]	Colour														
			Silver	Blue	Translucent blue	Black	Translucent black	Yellow	Translucent yellow	Green	Translucent green	Red	Translucent red	Brown	White	Natural	Blue/black
PUN	Polyurethane	3, 4, 6, 8, 10, 12, 14, 16	■	■	–	■	–	■	–	■	–	■	–	(■)[1]	(■)[1]	–	–
PUN-DUO	Polyurethane	4, 6, 8, 10	■	–	–	–	–	–	–	–	–	–	–	–	–	–	■
PUN-CM	Polyurethane	4, 6, 8, 10, 12, (14)[1]	–	–	–	■	–	–	–	–	–	–	–	–	–	–	–
PUN-H	Polyurethane	2	–	–	–	■	–	–	–	–	–	■	–	–	–	■	–
		3, 4, 6, 8, 10, 12, 14, 16	■	■	■	■	■	■	■	■	■	■	■	(■)[1]	(■)[1]	■	–
PUN-H-DUO	Polyurethane	4, 6, 8, 10	–	–	–	–	–	–	–	–	–	–	–	–	–	–	■
PUN-H-F	Polyurethane	4, 6, 8, 10, 12, 16	–	■	■	■	–	■	–	■	–	■	–	–	–	■	–
		14	–	■	–	■	–	–	–	–	–	■	–	–	–	■	–
PUN-H-SF	Polyurethane	4, 6, 8, 10, 12, 14, 16, 18, 22, 25	–	■	–	■	–	–	–	–	–	–	–	–	–	–	–
PUN-V0	Polyurethane	6, 8, 10, 16	–	■	–	■	–	■	–	■	–	■	–	■	■	–	–
PUN-V0-C	Polyurethane	4, 6, 8, 10, 12, 14, 16	–	■	–	■	–	■	–	■	–	■	–	■	■	–	–
PAN	Polyamide	4, 6, 8, 10, 12, 14, 16	■	■	–	■	–	■	–	■	–	■	–	(■)[1]	(■)[1]	■	–
PAN-R	Polyamide	4, 6, 8, 10, 12, (14)[1], 16	■	(■)[1]	–	(■)[1]	–	(■)[1]	–	(■)[1]	–	(■)[1]	–	(■)[1]	(■)[1]	(■)[1]	–
		22, 28	–	–	–	■	–	–	–	–	–	–	–	–	–	–	–
PAN-MF	Polyamide	4, 6, 8, 10, 12, 14, 16	(■)[1]	(■)[1]	–	■	–	(■)[1]	–	(■)[1]	–	(■)[1]	–	(■)[1]	(■)[1]	(■)[1]	–
PAN-V0	Polyamide	4, 6, 8, 10, 12	–	■	–	■	–	■	–	■	–	■	–	–	■	–	–
PFAN	Perfluoroalkoxy alkane	3, 4, 6, 8, 10, 12	–	–	–	–	–	–	–	–	–	–	–	–	–	■	–
PTFEN	Polytetrafluoro-ethylene	4, 6, 8, 10, 12, 14, 16	–	–	–	–	–	–	–	–	–	–	–	–	–	■	–
PEN	Polyethylene	4, 6, 8, 10, 12, 14, 16	■	■	–	■	–	■	–	■	–	■	–	(■)[1]	(■)[1]	■	–
PLN	Polyethylene	4, 6, 8, 10, 12, 14, 16	■	■	–	■	–	(■)[1]	–	(■)[1]	–	■	–	(■)[1]	(■)[1]	■	–

1) Please observe the note below.

Note

Product options in brackets can only be ordered using the modular product system.

Please observe the minimum order quantity for tubing with O.D. ≤ 8 mm is 3000 m and for tubing with O.D. > 8 mm. it is 1500 m.

There is a modular product system for plastic tubing:

- PUN → page 36
- PAN → page 50
- PEN → page 61
- PLN → page 65

Product range overview

Type	Operating medium													Resistance							
	Compressed air, vacuum	Water	Mineral oil	Oxygen	Food-safe [9]	Food-safe [10]	Material fire test	Antistatic	Halogen-free	Contact with electric cables	Suitable for energy chains	Approved by the German Technical Control Board (TÜV)	Maritime classification	Chemicals	Microbes	UV radiation	Hydrolysis	Flexible	Shore hardness [8]	Tolerance for packaging length	→ Page/Internet
PUN	■	–	–	–	–	–	UL94 HB	–	■	■[7]	■	■	–	–	–	++[4]	+	+++	D 52 ±3	±1%	8
PUN-DUO	■	–	–	–	–	–	UL94 HB	–	■	■[7]	■	■	–	–	–	+	+	++	D 52 ±3		11
PUN-CM	■	–	–	–	–	–	–	■	■	■	■	–	–	+	++	++	++	++	D 52 ±3		14
PUN-H	■	–	–	–	–	–	–	–	■	■	■	–	–	+	++	++[4]	++	+++	D 52 ±3		16
	■	■	–	–	■	–	UL94 HB	–	■	■	■	■	–	+	++	++[4]	++	+++	D 52 ±3		17
PUN-H-DUO	■	■	–	–	■	–	UL94 HB	–	■	■	■	■	–	+	++	+	++	++	D 52 ±3		22
PUN-H-F	■	■	–	■	–	■	UL94 HB	–	■	■	■	■	–	+	++	++[4]	++	++	D 52 ±3		25
	■	■	–	■	–	■	UL94 HB	–	■	■	■	■	–	+	++	++[4]	++	++	D 52 ±3		
PUN-H-SF	■	■	–	–	■	–	UL94 HB	–	■	■	■	–	–	+	++	++[4]	++	+++	D 54 +/-3		27
PUN-V0	■	■	–	–	–	–	UL94 V0...V2	–	■	■	■	■	–	+	++	++[4]	++	++	D 54 ±3		31
PUN-V0-C	■	■	–	–	–	–	UL94 V0...V2	–	■	■	■	■	–	+	++	++[4]	++	++	D 54 ±3		33
PAN	■	–	–	–	–	–	–	–	■	■	■	■	■[3]	+	++	+	++	++	D 55 ±3		38
PAN-R	■	–	–	–	–	–	–	–	■	■	■	■	–	+	++	+	++	+	D 62 ±3		42
	■	–	–	–	–	–	–	–	■	■	■	–	–	+	++	+	++	+	D 62 ±3		43
PAN-MF	■	–	■[2]	–	–	–	–	–	■	■	■	–	–	+	++	+	++	+	D 65 ±3		45
PAN-V0	■	■	■	–	–	–	UL94 V0	–	–	■	■	–	–	+	++	++	++	++	A 72 ±4[5] D 57 ±3[6]		48
PFAN	■	■	–	–	■	■	UL94 V0	–	–	■	–	■	–	+++	++	++	+++	+	D 60 +5		52
PTFEN	■	–	–	–	■	–	UL94 V0	–	–	■	–	–	–	+++	++	++	+++	+	D 55 ±5		55
PEN	■	■	–	–	–	–	–	–	■	■	■	■	–	++	++	++[4]	+++	++	D 52 ±3		58
PLN	■	■	–	–	■	–	–	–	■	■	–	■	–	++	++	++[4]	+++	+	D 59 ±3		63

2) As a precaution, please check the operating medium with Festo.
3) Applies to the colours silver and natural
4) Applies to the colour black
5) Outside tubing
6) Inside tubing
7) Cables containing organophosphates may damage PUN tubing under unfavourable conditions.
8) Values are determined using test panels. Values determined using tubing may vary.
9) See the supplementary material information
10) See the declaration of conformity

■ Criterion met
– Not suitable

+++ Highly suitable
++ Suitable
+ Limited suitability (on request)

Recommended tubing/fitting combinations

Fitting	Tubing type																
	PUN	PUN-DUO	PUN-CM	PUN-H	PUN-H-DUO	PUN-H-F	PUN-H-SF	PUN-V0	PUN-V0-C	PAN	PAN-R	PAN-MF	PAN-V0	PEN	PLN	PFAN	PTFEN
Fitting CK 1)	++	++	+	++	++	++	–	++	–	++	–	–	–	++	++	++	++
Fitting CN 2)	++	++	+	–	–	–	–	+	–	++	–	–	–	++	+	++	++
Fitting QS 3)	+++	+++	+	+++	+++	++	++	+	+	+++	++	++	+	+++	++	++	++
Fitting NPQH 4)	++	++	++	+++	+++	+++	+++	++	+++	++	+++	++	+	++	++	+++	+++
Fitting CRQS 5)	++	++	+	++	++	+++	++	++	++	++	++	++	+	++	++	+++	+++
Fitting NPQP 6)	++	++	+	++	++	+++	++	+	+	++	++	++	+	++	+++	+++	+++
Fitting NPKA 7)	++	++	+	+++	++	+++	++	+	–	++	++	–	–	++	++	++	++
Fitting NPCK 8)	++	++	++	++	++	+++	–	++	–	++	–	–	–	++	++	+++	+++
Fitting CQ 9)	–	–	–	–	–	–	–	–	–	–	++	–	–	–	–	–	–
Fitting QS-V0 10)	+	+	+	+	+	+	+	+	+	+	+	+	+++	+	+	+	+
Fitting NPQM 11)	++	++	+++	++	++	++	++	+++	++	++	++	++	+	+++	++	++	++
Fitting NPQR 12)	++	++	++	+++	+++	+++	+++	++	++	++	++	++	+	++	+++	+++	+++

+++ Recommended tubing/fitting combination
++ Well suited
\+ Limited suitability due to:
– Tubing PLN with fitting CN provides little flexibility
– No conductive contact with PUN-CM
– Incompatible characteristic "resistance to welding spatter" with PUN-V0 / PUN-V0-C
– Sub-optimal combination with regard to welding spatter resistance when insulation is removed from double-sheathed tubing PAN-V0
Note: Fitting QS-V0 is specially designed for tubing PAN-V0 with the insulation removed using tubing cutter PAN-V0S.
With other fittings, there is a gap near the releasing sleeve and the protective function against welding spatter is lost.
There is also an increased risk of the tubing kinking in this area.
However, this risk of kinking can be prevented by ensuring large bending radii when installing the tubing.
– Not suitable
1) For tubing size 4 to 8
2) For tubing size 3 to 8
3) For tubing size 2 to 12, 16 and 22
4) For tubing size 4 to 14
5) For tubing size 4 to 12; 16
6) For tubing size 4 to 12
7) For tubing size 6
8) For tubing size 4 to 10
9) For tubing size 22 and 28 (22 also possible with QS)
10) For tubing size 4 to 12
11) For tubing size 3 to 14
12) For tubing size 4 to 16

Note

Greater force is required when assembling the fittings CK/CN. Expanding the tubing ends using a tapered mandrel makes pushing them on easier.

Type codes

001	Series	
PUN	Plastic tubing, polyurethane	

002	Pipe/tubing O.D. x wall thickness	
3x0,5	3x0.5 mm	
4x0,75	4x0.75 mm	
6x1	6x1 mm	
8x1,25	8x1.25 mm	
10x1,5	10x1.5 mm	
12x2	12x2 mm	
14x2	14x2 mm	
16x2,5	16x2.5 mm	

003	Tubing type	
	Standard	
DUO	DUO pneumatic tubing	

004	Colour	
SW	Black	
BL	Blue	
SI	Silver	
RT	Red	
GN	Green	
GE	Yellow	
BS	Blue/black	

005	Packaging unit [m]	
	Standard	
100	100 m	
200	200 m	
300	300 m	
400	400 m	
500	500 m	

Datasheet

Plastic tubing PUN

Highly flexible plastic tubing

Material: Polyurethane

Note

The plastic tubing can only be installed in contact with cables if the sheathing is free from phosphoric acid esters. Failure to observe this can result in damage to the plastic tubing.

Operating and environmental conditions

Type		PUN-3	PUN-4	PUN-6	PUN-8	PUN-10	PUN-12	PUN-14	PUN-16
O.D.	[mm]	3	4	6	8	10	12	14	16
Pneumatic connection									
For push-in connector	[mm]	3	4	6	8	10	12	14	16
For barbed connector	[mm]	2	3	4	6	–	–	–	–
For barbed connector with union nut	[mm]	–	3	4	6	–	–	–	–
Temperature-dependent operating pressure	[MPa]	–0.095 ... +1 ➔ graph							
	[bar]	–0.95 ... +10							
	[psi]	–13,775 ... +145							
Operating pressure for full temperature range	[MPa]	–0.095 ... +0.7							
	[bar]	–0.95 ... +7							
	[psi]	–13,775 ... +101.5							
Operating medium		Compressed air to ISO 8573-1:2010 [7:–:–]							
Ambient temperature	[°C]	–35 ... +60							
Material fire test		UL94 HB							
Certification		German Technical Control Board (TÜV)							
Certificate-issuing authority		B 013277 0506 00							
Tubing characteristics		Suitable for energy chains							

Operating pressure p as a function of temperature t

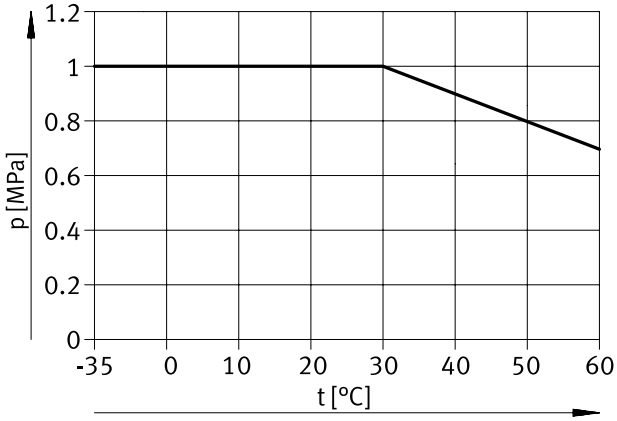

Materials

Shore hardness	D 52 ±3
Material of tubing	TPE-U(PU)
Note on materials	RoHS-compliant
Application information	The plastic tubing can only be installed in contact with cables if the sheathing is free from phosphoric acid esters.
	TPE-U, ester-based
LABS (PWIS) conformity	VDMA24364-B2-L

Datasheet

Dimensions – Reel

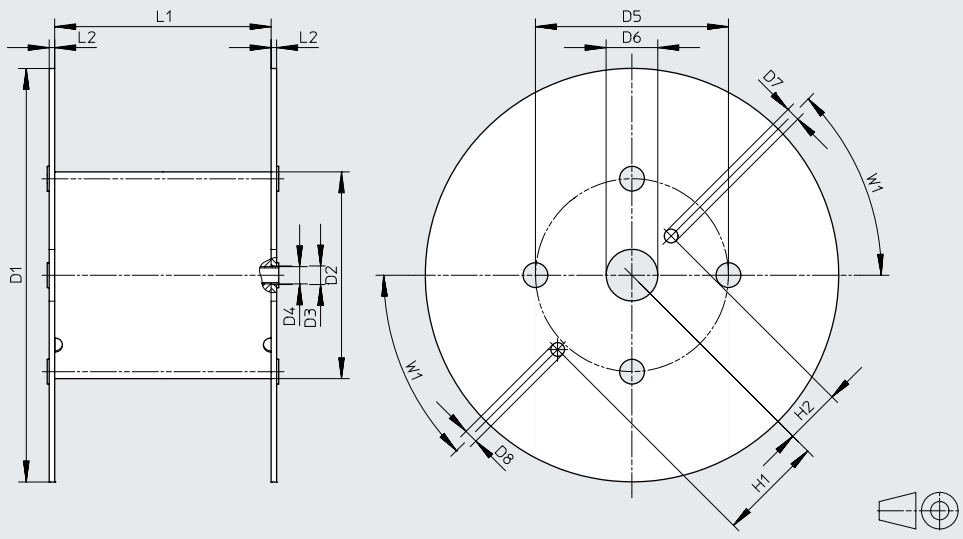

Type	D1 ⌀	D2 ⌀	D3 ⌀	D4 ⌀	D5 ⌀	D6 ⌀	D7 ⌀	D8 ⌀	H1	H2	L1	L2	W1
For PUN-3x0.5-...-500	545	246	21	20	216	75	20	20	152.5	80.5	128	8	45°
For PUN-4x0.75-...-500	545	246	21	20	216	75	20	20	152.5	80.5	128	8	45°
For PUN-6x1-...-500	600	310	21	20	280	75	20	20	152.5	80.5	114	8	45°
For PUN-8x1.25-...-400	545	310	21	20	280	75	20	20	152.5	80.5	254	8	45°
For PUN-10x1.5-...-300	600	310	21	20	280	75	20	20	152.5	80.5	254	8	45°
For PUN-12x2-...-200	600	310	21	20	280	75	20	20	152.5	80.5	254	8	45°
For PUN-16x2.5-...-100	545	310	21	20	280	75	20	20	152.5	80.5	254	8	45°

Dimensions and ordering data

O.D. [mm]	I.D. [mm]	Min. bending radius [mm]	Flow-relevant bending radius [mm]	Weight [kg/m]	Colour	Part no.	Type	PU[1] [m]
3	2.1	9	12	0.0044	Silver	**152583**	**PUN-3x0.5-SI**	**50**
					Silver	**525738**	**PUN-3x0.5-SI-500**	**500**
					Blue	**159660**	**PUN-3x0.5-BL**	**50**
					Blue	**525745**	**PUN-3x.0.5-BL-500**	**500**
					Black	**159661**	**PUN-3x0.5-SW**	**50**
					Black	**553936**	**PUN-3x0.5-SW-500**	**500**
					Yellow	**178416**	**PUN-3x0.5-GE**	**50**
					Green	**178423**	**PUN-3x0.5-GN**	**50**
					Red	**178409**	**PUN-3x0.5-RT**	**50**
4	2.6	8	17	0.0089	Silver	**152584**	**PUN-4x0.75-SI**	**50**
					Silver	**525739**	**PUN-4x0.75-SI-500**	**500**
					Blue	**159662**	**PUN-4x0.75-BL**	**50**
					Blue	**525746**	**PUN-4x0.75-BL-500**	**500**
					Black	**159663**	**PUN-4x0.75-SW**	**50**
					Black	**553937**	**PUN-4x0.75-SW-500**	**500**
					Yellow	**178417**	**PUN-4x0.75-GE**	**50**
					Green	**178424**	**PUN-4x0.75-GN**	**50**
					Red	**178410**	**PUN-4x0.75-RT**	**50**

1) Packaging unit

Datasheet

Dimensions and ordering data

O.D. [mm]	I.D. [mm]	Min. bending radius [mm]	Flow-relevant bending radius [mm]	Weight [kg/m]	Colour	Part no.	Type	PU[1] [m]
6	4.0	16	26.5	0.0192	Silver	**152586**	**PUN-6x1-SI**	**50**
					Silver	**525740**	**PUN-6x1-SI-500**	**500**
					Blue	**159664**	**PUN-6x1-BL**	**50**
					Blue	**525747**	**PUN-6x1-BL-500**	**500**
					Black	**159665**	**PUN-6x1-SW**	**50**
					Black	**553938**	**PUN-6x1-SW-500**	**500**
					Yellow	**178418**	**PUN-6x1-GE**	**50**
					Green	**178425**	**PUN-6x1-GN**	**50**
					Red	**178411**	**PUN-6x1-RT**	**50**
8	5.7	24	37	0.0302	Silver	**152587**	**PUN-8x1.25-SI**	**50**
					Silver	**525741**	**PUN-8x1.25-SI-400**	**400**
					Blue	**159666**	**PUN-8x1.25-BL**	**50**
					Blue	**525748**	**PUN-8x1.25-BL-400**	**400**
					Black	**159667**	**PUN-8x1.25-SW**	**50**
					Black	**553939**	**PUN-8x1.25-SW-400**	**400**
					Yellow	**178419**	**PUN-8x1.25-GE**	**50**
					Green	**178426**	**PUN-8x1.25-GN**	**50**
					Red	**178412**	**PUN-8x1.25-RT**	**50**
10	7.0	28	54	0.0489	Silver	**152588**	**PUN-10x1.5-SI**	**50**
					Silver	**525742**	**PUN-10x1.5-SI-300**	**300**
					Blue	**159668**	**PUN-10x1.5-BL**	**50**
					Blue	**525749**	**PUN-10x1.5-BL-300**	**300**
					Black	**159669**	**PUN-10x1.5-SW**	**50**
					Black	**553940**	**PUN-10x1.5-SW-300**	**300**
					Yellow	**178420**	**PUN-10x1.5-GE**	**50**
					Green	**178427**	**PUN-10x1.5-GN**	**50**
					Red	**178413**	**PUN-10x1.5-RT**	**50**
12	8.0	33	62	0.0767	Silver	**152589**	**PUN-12x2-SI**	**50**
					Silver	**525743**	**PUN-12x2-SI-200**	**200**
					Blue	**159670**	**PUN-12x2-BL**	**50**
					Blue	**525750**	**PUN-12x2-BL-200**	**200**
					Black	**159671**	**PUN-12x2-SW**	**50**
					Black	**553941**	**PUN-12x2-SW-200**	**200**
					Yellow	**178421**	**PUN-12x2-GE**	**50**
					Green	**178428**	**PUN-12x2-GN**	**50**
					Red	**178414**	**PUN-12x2-RT**	**50**
14	9.8	45	84	0.0949	Silver	**570389**	**PUN-14x2-SI**	**50**
					Blue	**570390**	**PUN-14x2-BL**	**50**
					Black	**570391**	**PUN-14x2-SW**	**50**
16	11.0	45	88	0.1294	Silver	**152590**	**PUN-16x2.5-SI**	**50**
					Silver	**525744**	**PUN-16x2.5-SI-100**	**100**
					Blue	**159672**	**PUN-16x2.5-BL**	**50**
					Blue	**525751**	**PUN-16x2.5-BL-100**	**100**
					Black	**159673**	**PUN-16x2.5-SW**	**50**
					Black	**553942**	**PUN-16x2.5-SW-100**	**100**
					Yellow	**178422**	**PUN-16x2.5-GE**	**50**
					Green	**178429**	**PUN-16x2.5-GN**	**50**
					Red	**178415**	**PUN-16x2.5-RT**	**50**

1) Packaging unit

Datasheet

DUO tubing PUN-DUO
Highly flexible paired plastic tubing that is characterised by excellent resistance to abrasion and kinking.
Two lengths of tubing are fused together into a tubing pair. To install it, the tubing pair is separated as required at both ends.

Note
The plastic tubing can only be installed in contact with cables if the sheathing is free from phosphoric acid esters. Failure to observe this can result in damage to the plastic tubing.

Material: Polyurethane

Operating and environmental conditions

Type		PUN-4-...-DUO	PUN-6-...-DUO	PUN-8-...-DUO	PUN-10-...-DUO
O.D.	[mm]	4	6	8	10
Pneumatic connection					
For push-in connector	[mm]	4	6	8	10
For barbed connector	[mm]	3	4	6	–
For barbed connector with union nut	[mm]	3	4	6	–
Temperature-dependent operating pressure	[MPa]	–0.095 ... +1 ➔ graph			
	[bar]	–0.95 ... +10			
	[psi]	–13,775 ... +145			
Operating pressure for full temperature range	[MPa]	–0.095 ... +0.7			
	[bar]	–0.95 ... +7			
	[psi]	–13,775 ... +101.5			
Operating medium		Compressed air to ISO 8573-1:2010 [7:–:–]			
Ambient temperature	[°C]	–35 ... +60			
Material fire test		UL94 HB			
Certification		German Technical Control Board (TÜV)			
Certificate-issuing authority		B 013277 0506 00			
Tubing characteristics		Suitable for energy chains			

Operating pressure p as a function of temperature t

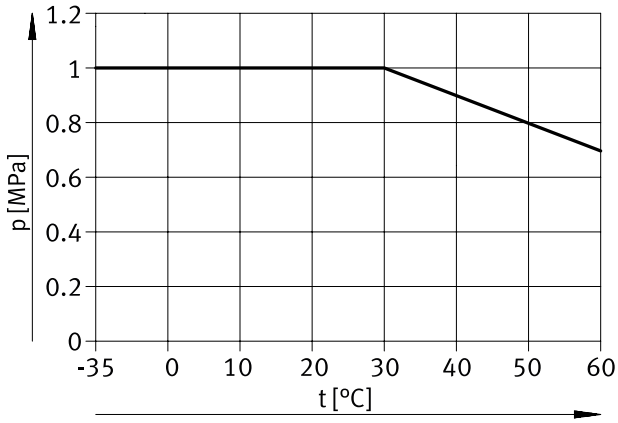

Datasheet

Materials

Shore hardness	D 52 ±3
Material of tubing	TPE-U(PU)
Note on materials	RoHS-compliant
Application information	The plastic tubing can only be installed in contact with cables if the sheathing is free from phosphoric acid esters.
	TPE-U, ester-based
LABS (PWIS) conformity	VDMA24364-B2-L

Dimensions and ordering data

O.D. [mm]	I.D. [mm]	Min. bending radius [mm]	Flow-relevant bending radius [mm]	Weight [kg/m]	Colour	Part no.	Type	PU[1] [m]
4	2.6	8	17	0.0178	Silver	**152822**	**PUN-4x0.75-DUO-SI**	**50**
					Blue/black	**159674**	**PUN-4x0.75-DUO-BS**	**50**
6	4	16	26.5	0.0384	Silver	**152823**	**PUN-6x1-DUO-SI**	**50**
					Blue/black	**159675**	**PUN-6x1-DUO-BS**	**50**
8	5.7	24	37	0.0604	Silver	**152824**	**PUN-8x1.25-DUO-SI**	**50**
					Blue/black	**159676**	**PUN-8x1.25-DUO-BS**	**50**
10	7	28	54	0.0978	Silver	**152825**	**PUN-10x1.5-DUO-SI**	**50**
					Blue/black	**159677**	**PUN-10x1.5-DUO-BS**	**50**

1) Packaging unit

Type codes

001	Series	
PUN	Plastic tubing, polyurethane	

002	Alternative material characteristic	
CM	Antistatic	

003	Tubing outside diameter	
12	12 mm	
4	4 mm	
6	6 mm	
8	8 mm	
10	10 mm	

004	Colour	
SW	Black	

Datasheet

Plastic tubing PUN-CM

Highly flexible plastic tubing, electrically conductive.

Material: Polyurethane

Operating and environmental conditions

Type		PUN-CM-4	PUN-CM-6	PUN-CM-8	PUN-CM-10	PUN-CM-12
O.D.	[mm]	4	6	8	10	12
Pneumatic connection						
For push-in connector	[mm]	4	6	8	10	12
Temperature-dependent operating pressure	[MPa]	–0.095 ... +1 ➔ graph				
	[bar]	–0.95 ... +10				
	[psi]	–13.775 ... +145				
Operating medium		Compressed air to ISO 8573-1:2010 [7:–:–]				
Ambient temperature	[°C]	–35 ... +60				
Surface resistance	[Ω]	10^4 ... 10^7				
Tubing characteristics		Suitable for energy chains				

Operating pressure p as a function of temperature t

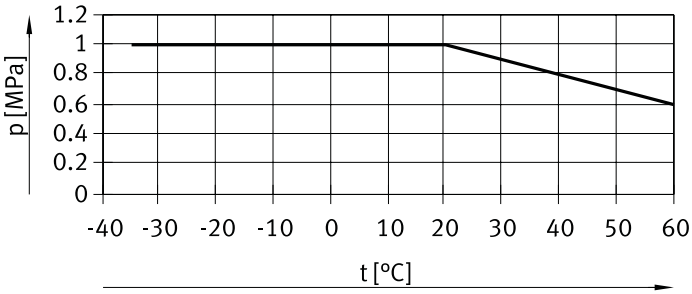

Materials

Shore hardness	D 52 ±3
Tubing	TPE-U(PU)
Note on materials	RoHS-compliant
LABS (PWIS) conformity	VDMA24364-B2-L

Dimensions and ordering data

O.D. [mm]	I.D. [mm]	Min. bending radius [mm]	Flow-relevant bending radius [mm]	Weight [kg/m]	Colour	Part no.	Type	PU[1] [m]
4	2.5	8	17	0.00993	Black	**188882**	**PUN-CM-4-SW**	**50**
6	4	14	28	0.02125		**188883**	**PUN-CM-6-SW**	**50**
8	5.5	20	37	0.03527		**130816**	**PUN-CM-8-SW**	**50**
10	7	30	60	0.05158		**130817**	**PUN-CM-10-SW**	**50**
12	8	30	70	0.08107		**130818**	**PUN-CM-12-SW**	**50**
14	9.8	41	80	0.095		Modular product system ➔ 36		

1) Packaging unit

Type codes

001	Series	
PUN	Plastic tubing, polyurethane	

002	Alternative material characteristic	
H	Hydrolysis-resistant	

003	Pipe/tubing O.D. x wall thickness	
2x0,4	2x0.4 mm	
3x0,5	3x0.5 mm	
4x0,75	4x0.75 mm	
6x1	6x1 mm	
8x1,25	8x1.25 mm	
10x1,5	10x1.5 mm	
12x2	12x2 mm	
14x2	14x2 mm	
16x2,5	16x2.5 mm	

004	Tubing type	
	Standard	
DUO	DUO pneumatic tubing	

005	Colour	
NT	Natural	
TBL	Translucent blue	
SW	Black	
BL	Blue	
TSW	Translucent black	
SI	Silver	
RT	Red	
TRT	Translucent red	
GN	Green	
TGN	Translucent green	
GE	Yellow	
TGE	Translucent yellow	
BS	Blue/black	

006	Packaging unit [m]	
	Standard	
100	100 m	
200	200 m	
300	300 m	
400	400 m	
500	500 m	

Datasheet

Plastic tubing PUN-H
With O.D. 2 mm

Material: Polyurethane

Operating and environmental conditions

Type		PUN-H-2
O.D.	[mm]	2
Pneumatic connection		
For push-in connector	[mm]	2
Temperature-dependent operating pressure	[MPa]	–0.095 ... +1 ➔ graph
	[bar]	–0.95 ... +10
	[psi]	–13.775 ... +145
Operating pressure for full temperature range	[MPa]	–0.095 ... +0.6
	[bar]	–0.95 ... +6
	[psi]	–13.775 ... +87
Operating medium		Compressed air to ISO 8573-1:2010 [7:–:–]
Ambient temperature	[°C]	–35 ... +60
Tubing characteristics		Suitable for energy chains

Operating pressure p as a function of temperature t

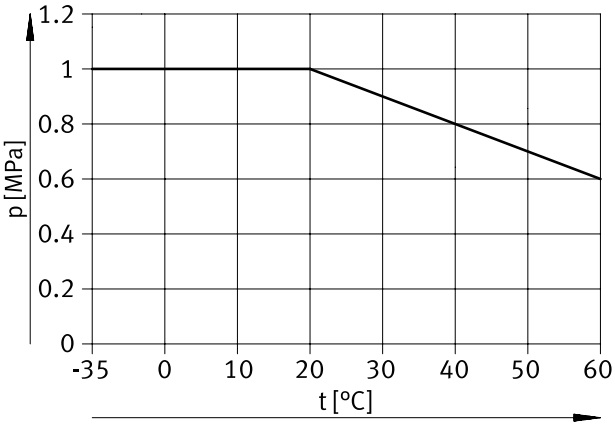

Materials

Shore hardness	D 52 ±3
Tubing	TPE-U(PU)
Note on materials	RoHS-compliant
LABS (PWIS) conformity	VDMA24364-B2-L
Application information	TPE-U, ether-based

Dimensions and ordering data

O.D. [mm]	I.D. [mm]	Min. bending radius [mm]	Flow-relevant bending radius [mm]	Weight [kg/m]	Colour	Part no.	Type	PU[1] [m]
2	1.2	5	8	0.0024	Natural	**133038**	**PUN-H-2x0.4-NT**	**50**
					Black	**133039**	**PUN-H-2x0.4-SW**	**50**
					Red	**133040**	**PUN-H-2x0.4-RT**	**50**

1) Packaging unit

Datasheet

Plastic tubing PUN-H
With O.D. 3 ... 16 mm

Material: Polyurethane

Operating and environmental conditions

Type		PUN-H-3	PUN-H-4	PUN-H-6	PUN-H-8	PUN-H-10	PUN-H-12	PUN-H-14	PUN-H-16
O.D.	[mm]	3	4	6	8	10	12	14	16
Pneumatic connection									
For push-in connector	[mm]	3	4	6	8	10	12	14	16
For barbed connector with union nut	[mm]	–	3	4	6	–	–	–	–
Temperature-dependent operating pressure	[MPa]	–0.095 ... +1 ➔ graph							
	[bar]	–0.95 ... +10							
	[psi]	–13,775 ... +145							
Operating pressure for full temperature range	[MPa]	–0.095 ... +0.6							
	[bar]	–0.95 ... +6							
	[psi]	–13,775 ... +87							
Operating medium		Compressed air to ISO 8573-1:2010 [7:–:–]							
		Water as per manufacturer's declaration[1)2)]							
LABS (PWIS) conformity		VDMA24364-B2-L							
Suitable for the production of lithium-ion batteries		Metals with more than 1% by mass of copper, zinc or nickel are excluded from use. Exceptions are nickel in steel, chemically nickel-plated surfaces, printed circuit boards, cables, electrical plug connectors and coils.							
Cleanroom class		Element installed statically, no meaningful evaluation possible according to ISO 14644-1							
Application information		TPE-U, ether-based							
Ambient temperature	[°C]	–35 ... +60							
Food-safe[2)]		See supplementary material information							
Material fire test		UL94 HB							
Certification[2)]		German Technical Control Board (TÜV)							
Certificate-issuing authority		B 013277 0506 00							
Tubing characteristics		Suitable for energy chains							

1) Applies only to the colours natural, blue, black, silver, red, green, yellow
2) More information: www.festo.com/catalogue/pun-h ➔ Support/Downloads.

Operating pressure p as a function of temperature t

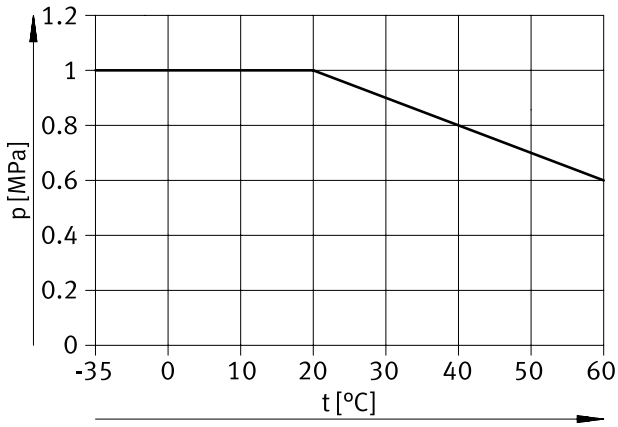

Operating pressure p as a function of temperature t (medium: water)

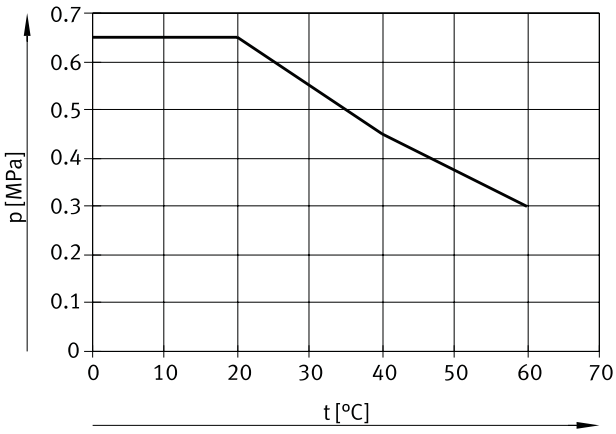

Datasheet

Materials

Shore hardness	D 52 ±3
Tubing	TPE-U(PU)
Note on materials	RoHS-compliant
LABS (PWIS) conformity	VDMA24364-B2-L
Suitable for the production of lithium-ion batteries	Metals with more than 1% by mass of copper, zinc or nickel are excluded from use. Exceptions are nickel in steel, chemically nickel-plated surfaces, printed circuit boards, cables, electrical plug connectors and coils.
Cleanroom class	Element installed statically, no meaningful evaluation possible according to ISO 14644-1
Application information	TPE-U, ether-based

Dimensions – Reel

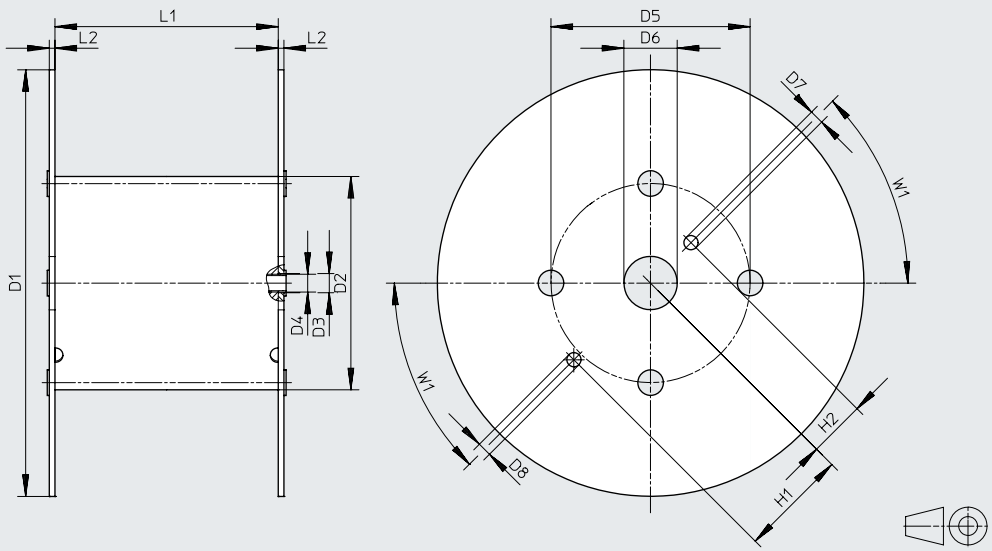

Type	D1 ø	D2 ø	D3 ø	D4 ø	D5 ø	D6 ø	D7 ø	D8 ø	H1	H2	L1	L2	W1
For PUN-H-3x0.5-...-500	545	246	21	20	216	75	20	20	152.5	80.5	128	8	45°
For PUN-H-4x0.75-...-500	545	246	21	20	216	75	20	20	152.5	80.5	128	8	45°
For PUN-H-6x1-...-500	545	246	21	20	216	75	20	20	152.5	80.5	128	8	45°
For PUN-H-8x1.25-...-400	545	310	21	20	280	75	20	20	152.5	80.5	254	8	45°
For PUN-H-10x1.5-...-300	600	310	21	20	280	75	20	20	152.5	80.5	254	8	45°
For PUN-H-12x2-...-200	600	310	21	20	280	75	20	20	152.5	80.5	254	8	45°
For PUN-H-16x2.5-...-100	545	310	21	20	280	75	20	20	152.5	80.5	254	8	45°

Dimensions and ordering data

O.D. [mm]	I.D. [mm]	Min. bending radius [mm]	Flow-relevant bending radius [mm]	Weight [kg/m]	Colour	Part no.	Type	PU[1] [m]
3	2.1	6	12	0.0042	Natural	**197375**	**PUN-H-3x0.5-NT**	**50**
					Natural	**558263**	**PUN-H-3x0.5-NT-500**	**500**
					Blue	**197382**	**PUN-H-3x0.5-BL**	**50**
					Blue	**558256**	**PUN-H-3x0.5 BL-500**	**500**
					Black	**197389**	**PUN-H-3x0.5-SW**	**50**
					Black	**558249**	**PUN-H-3x0.5-SW-500**	**500**
					Silver	**558277**	**PUN-H-3x0.5-SI**	**50**
					Silver	**558270**	**PUN-H-3x0.5-SI-500**	**500**
					Red	**558284**	**PUN-H-3x0.5-RT**	**50**
					Green	**558291**	**PUN-H-3x0.5-GN**	**50**
					Yellow	**558298**	**PUN-H-3x0.5-GE**	**50**

1) Packaging unit

Datasheet

★ Core Range

Dimensions and ordering data

O.D. [mm]	I.D. [mm]	Min. bending radius [mm]	Flow-relevant bending radius [mm]	Weight [kg/m]	Colour	Part no.	Type	PU[1] [m]
4	2.6	8	16	0.0085	Natural	★ 197376	PUN-H-4x0.75-NT	50
					Natural	★ 558264	PUN-H-4x0.75-NT-500	500
					Blue	★ 197383	PUN-H-4x0.75-BL	50
					Blue	★ 558257	PUN-H-4x0.75-BL-500	500
					Translucent blue	★ 8048671	PUN-H-4x0.75-TBL	50
					Translucent blue	★ 8048672	PUN-H-4x0.75-TBL-500	500
					Black	★ 197390	PUN-H-4x0.75-SW	50
					Black	★ 558250	PUN-H-4x0.75-SW-500	500
					Translucent black	★ 8048673	PUN-H-4x0.75-TSW	50
					Translucent black	★ 8048674	PUN-H-4x0.75-TSW-500	500
					Silver	★ 558278	PUN-H-4x0.75-SI	50
					Silver	★ 558271	PUN-H-4x0.75-SI-500	500
					Red	558285	PUN-H-4x0.75-RT	50
					Translucent red	8048675	PUN-H-4x0.75-TRT	50
					Translucent red	8048676	PUN-H-4x0.75-TRT-500	500
					Green	558292	PUN-H-4x0.75-GN	50
					Translucent green	8048677	PUN-H-4x0.75-TGN	50
					Translucent green	8048678	PUN-H-4x0.75-TGN-500	500
					Yellow	558299	PUN-H-4x0.75-GE	50
					Translucent yellow	8048679	PUN-H-4x0.75-TGE	50
					Translucent yellow	8048680	PUN-H-4x0.75-TGE-500	500
6	4	10	26	0.0183	Natural	★ 197377	PUN-H-6x1-NT	50
					Natural	★ 558265	PUN-H-6x1-NT-500	500
					Blue	★ 197384	PUN-H-6x1-BL	50
					Blue	★ 558258	PUN-H-6x1-BL-500	500
					Translucent blue	★ 8048681	PUN-H-6x1-TBL	50
					Translucent blue	★ 8048682	PUN-H-6x1-TBL-500	500
					Black	★ 197391	PUN-H-6x1-SW	50
					Black	★ 558251	PUN-H-6x1-SW-500	500
					Translucent black	★ 8048683	PUN-H-6x1-TSW	50
					Translucent black	★ 8048684	PUN-H-6x1-TSW-500	500
					Silver	★ 558279	PUN-H-6x1-SI	50
					Silver	★ 558272	PUN-H-6x1-SI-500	500
					Red	558286	PUN-H-6x1-RT	50
					Translucent red	8048685	PUN-H-6x1-TRT	50
					Translucent red	8048686	PUN-H-6x1-TRT-500	500
					Green	558293	PUN-H-6x1-GN	50
					Translucent green	8048687	PUN-H-6x1-TGN	50
					Translucent green	8048688	PUN-H-6x1-TGN-500	500
					Yellow	558300	PUN-H-6x1-GE	50
					Translucent yellow	8048689	PUN-H-6x1-TGE	50
					Translucent yellow	8048690	PUN-H-6x1-TGE-500	500

1) Packaging unit

Datasheet

★ Core Range

Dimensions and ordering data

O.D. [mm]	I.D. [mm]	Min. bending radius [mm]	Flow-relevant bending radius [mm]	Weight [kg/m]	Colour	Part no.	Type	PU[1] [m]
8	5.7	21	37	0.0287	Natural	★ 197378	PUN-H-8x1.25-NT	50
					Natural	★ 558266	PUN-H-8x1.25-NT-400	400
					Blue	★ 197385	PUN-H-8x1.25-BL	50
					Blue	★ 558259	PUN-H-8x1.25-BL-400	400
					Translucent blue	★ 8048691	PUN-H-8x1.25-TBL	50
					Translucent blue	★ 8048692	PUN-H-8x1.25-TBL-400	400
					Black	★ 197392	PUN-H-8x1.25-SW	50
					Black	★ 558252	PUN-H-8x1.25-SW-400	400
					Translucent black	★ 8048693	PUN-H-8x1.25-TSW	50
					Translucent black	★ 8048694	PUN-H-8x1.25-TSW-400	400
					Silver	★ 558280	PUN-H-8x1.25-SI	50
					Silver	★ 558273	PUN-H-8x1.25-SI-400	400
					Red	558287	PUN-H-8x1.25-RT	50
					Translucent red	8048695	PUN-H-8x1.25-TRT	50
					Translucent red	8048696	PUN-H-8x1.25-TRT-400	400
					Green	558294	PUN-H-8x1.25-GN	50
					Translucent green	8048697	PUN-H-8x1.25-TGN	50
					Translucent green	8048698	PUN-H-8x1.25-TGN-400	400
					Yellow	558301	PUN-H-8x1.25-GE	50
					Translucent yellow	8048699	PUN-H-8x1.25-TGE	50
					Translucent yellow	8048700	PUN-H-8x1.25-TGE-400	400
10	7	28	52	0.0465	Natural	★ 197379	PUN-H-10x1.5-NT	50
					Natural	★ 558267	PUN-H-10x1.5-NT-300	300
					Blue	★ 197386	PUN-H-10x1.5-BL	50
					Blue	★ 558260	PUN-H-10x1.5-BL-300	300
					Translucent blue	★ 8048701	PUN-H-10x1.5-TBL	50
					Translucent blue	★ 8048702	PUN-H-10x1.5-TBL-300	300
					Black	★ 197393	PUN-H-10x1.5-SW	50
					Black	★ 558253	PUN-H-10x1.5-SW-300	300
					Translucent black	★ 8048703	PUN-H-10x1.5-TSW	50
					Translucent black	★ 8048704	PUN-H-10x1.5-TSW-300	300
					Silver	★ 558281	PUN-H-10x1.5-SI	50
					Silver	★ 558274	PUN-H-10x1.5-SI-300	300
					Red	558288	PUN-H-10x1.5-RT	50
					Translucent red	8048705	PUN-H-10x1.5-TRT	50
					Translucent red	8048706	PUN-H-10x1.5-TRT-300	300
					Green	558295	PUN-H-10x1.5-GN	50
					Translucent green	8048707	PUN-H-10x1.5-TGN	50
					Translucent green	8048708	PUN-H-10x1.5-TGN-300	300
					Yellow	558302	PUN-H-10x1.5-GE	50
					Translucent yellow	8048709	PUN-H-10x1.5-TGE	50
					Translucent yellow	8048710	PUN-H-10x1.5-TGE-300	300

1) Packaging unit

Datasheet

★ Core Range

Dimensions and ordering data

O.D. [mm]	I.D. [mm]	Min. bending radius [mm]	Flow-relevant bending radius [mm]	Weight [kg/m]	Colour	Part no.	Type	PU[1] [m]
12	8	33	62	0.0729	Natural	★ 197380	PUN-H-12x2-NT	50
					Natural	★ 558268	PUN-H-12x2-NT-200	200
					Blue	★ 197387	PUN-H-12x2-BL	50
					Blue	★ 558261	PUN-H-12x2-BL-200	200
					Translucent blue	★ 8048711	PUN-H-12x2-TBL	50
					Translucent blue	★ 8048712	PUN-H-12x2-TBL-200	200
					Black	★ 197394	PUN-H-12x2-SW	50
					Black	★ 558254	PUN-H-12x2-SW-200	200
					Translucent black	★ 8048713	PUN-H-12x2-TSW	50
					Translucent black	★ 8048714	PUN-H-12x2-TSW-200	200
					Silver	★ 558282	PUN-H-12x2-SI	50
					Silver	★ 558275	PUN-H-12x2-SI-200	200
					Red	558289	PUN-H-12x2-RT	50
					Translucent red	8048715	PUN-H-12x2-TRT	50
					Translucent red	8048716	PUN-H-12x2-TRT-200	200
					Green	558296	PUN-H-12x2-GN	50
					Translucent green	8048717	PUN-H-12x2-TGN	50
					Translucent green	8048718	PUN-H-12x2-TGN-200	200
					Yellow	558303	PUN-H-12x2-GE	50
					Translucent yellow	8048719	PUN-H-12x2-TGE	50
					Translucent yellow	8048720	PUN-H-12x2-TGE-200	200
14	9.8	38	78	0.091	Natural	570388	PUN-H-14x2-NT	50
					Blue	570386	PUN-H-14x2-BL	50
					Black	570387	PUN-H-14x2-SW	50
16	11	38	88	0.123	Natural	197381	PUN-H-16x2.5-NT	50
					Natural	558269	PUN-H-16x2.5-NT-100	100
					Blue	197388	PUN-H-16x2.5-BL	50
					Blue	558262	PUN-H-16x2.5-BL-100	100
					Black	197395	PUN-H-16x2.5-SW	50
					Black	558255	PUN-H-16x2.5-SW-100	100
					Silver	558283	PUN-H-16x2.5-SI	50
					Silver	558276	PUN-H-16x2.5-SI-100	100
					Red	558290	PUN-H-16x2.5-RT	50
					Green	558297	PUN-H-16x2.5-GN	50
					Yellow	558304	PUN-H-16x2.5-GE	50

1) Packaging unit

Datasheet

DUO tubing PUN-H-DUO

Highly flexible paired plastic tubing that is characterised by excellent resistance to abrasion and kinking.

Material: Polyurethane

Two lengths of tubing are fused together into a tubing pair. To install it, the tubing pair is separated as required at both ends.

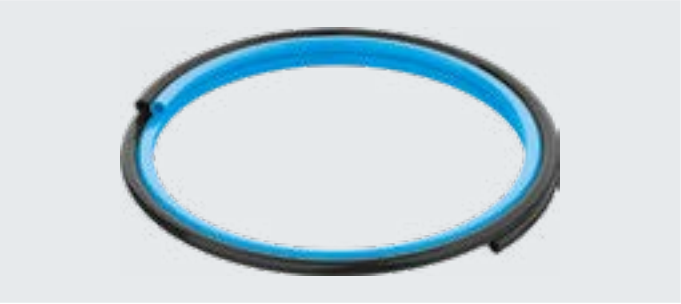

Operating and environmental conditions

Type		PUN-H-4-...-DUO	PUN-H-6-...-DUO	PUN-H-8-...-DUO	PUN-H-10-...-DUO
O.D.	[mm]	4	6	8	10
Pneumatic connection					
For push-in connector	[mm]	4	6	8	10
For barbed connector with union nut	[mm]	3	4	6	–
Temperature-dependent operating pressure	[MPa]	–0.095 ... +1 ➔ graph			
	[bar]	–0.95 ... +10			
	[psi]	–13,775 ... +145			
Operating pressure for full temperature range	[MPa]	–0.095 ... +0.6			
	[bar]	–0.95 ... +6			
	[psi]	–13,775 ... +87			
Operating medium		Compressed air to ISO 8573-1:2010 [7:–:–]			
		Water as per manufacturer's declaration[1)]			
Suitable for the production of lithium-ion batteries		Metals with more than 1% by mass of copper, zinc or nickel are excluded from use. Exceptions are nickel in steel, chemically nickel-plated surfaces, printed circuit boards, cables, electrical plug connectors and coils.			
Cleanroom class		Element installed statically, no meaningful evaluation possible according to ISO 14644-1			
Ambient temperature	[°C]	–35 ... +60			
Food-safe[1)]		See supplementary material information			
Material fire test		UL94 HB			
Certification[1)]		German Technical Control Board (TÜV)			
Certificate-issuing authority		B 013277 0506 00			
Tubing characteristics		Suitable for energy chains			

1) More information: www.festo.com/catalogue/pun-h ➔ Support/Downloads.

Operating pressure p as a function of temperature t

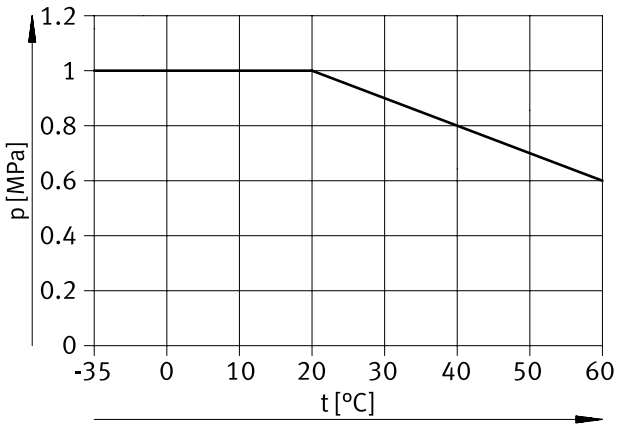

Operating pressure p as a function of temperature t (medium: water)

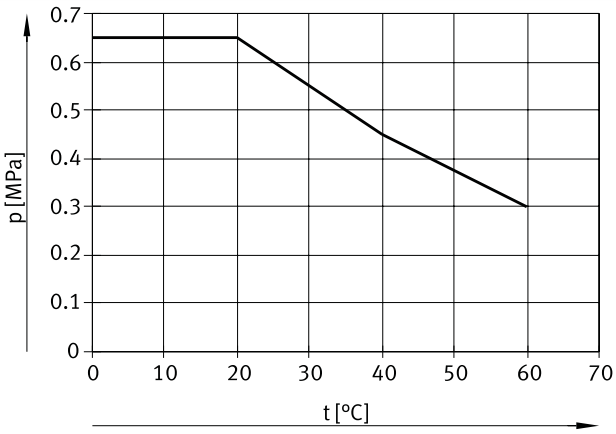

Datasheet

Materials

Shore hardness	D 52 ±3
Tubing	TPE-U(PU)
Note on materials	RoHS-compliant
LABS (PWIS) conformity	VDMA24364-B2-L
Suitable for the production of lithium-ion batteries	Metals with more than 1% by mass of copper, zinc or nickel are excluded from use. Exceptions are nickel in steel, chemically nickel-plated surfaces, printed circuit boards, cables, electrical plug connectors and coils.
Cleanroom class	Element installed statically, no meaningful evaluation possible according to ISO 14644-1
Application information	TPE-U, ether-based

Dimensions and ordering data

O.D. [mm]	I.D. [mm]	Min. bending radius [mm]	Flow-relevant bending radius [mm]	Weight [kg/m]	Colour	Part no.	Type	PU[1] [m]
4	2.6	8	16	0.017	Blue/black	**197396**	**PUN-H-4x0.75-DUO**	**50**
6	4	10	26	0.0366		**197397**	**PUN-H-6x1-DUO**	**50**
8	5.7	21	37	0.0574		**197398**	**PUN-H-8x1.25-DUO**	**50**
10	7	28	52	0.093		**197399**	**PUN-H-10x1.5-DUO**	**50**

1) Packaging unit

Type codes

001	Series	
PUN	Plastic tubing, polyurethane	

002	Alternative material characteristic	
H	Hydrolysis-resistant	

003	Additional features	
F	Food-safe	

004	Pipe/tubing O.D. x wall thickness	
4x0,75	4x0.75 mm	
6x1	6x1 mm	
8x1,25	8x1.25 mm	
10x1,5	10x1.5 mm	
12x2	12x2 mm	
14x2	14x2 mm	
16x2,5	16x2.5 mm	

005	Colour	
NT	Natural	
TBL	Translucent blue	
SW	Black	
BL	Blue	
RT	Red	
GN	Green	
GE	Yellow	

Datasheet

Plastic tubing PUN-H-F
With O.D. 4 ... 16 mm

Suitable for contact with food.

Material: Polyurethane

Operating and environmental conditions

Type		PUN-H-F-4	PUN-H-F-6	PUN-H-F-8	PUN-H-F-10	PUN-H-F-12	PUN-H-F-14	PUN-H-F-16
O.D.	[mm]	4	6	8	10	12	14	16
Pneumatic connection								
For push-in connector	[mm]	4	6	8	10	12	14	16
For barbed connector with union nut	[mm]	3	4	6	10	–	–	–
Temperature-dependent operating pressure	[MPa]	–0.095 ... 1 MPa ➔ graph						
	[bar]	–0.95 ... 10 bar						
	[psi]	–13.775 ... 145 psi						
Operating pressure for full temperature range	[MPa]	–0.095 ... 0.6 MPa						
	[bar]	–0.95 ... 6 bar						
	[psi]	–13.775 ... 87 psi						
Note on operating pressure		Water: max. 0.65 MPa at 20°C, max. 0.45 MPa at 40°C, max. 0.3 MPa at 60°C						
Operating medium		Compressed air to ISO 8573-1:2010 [7:–:–]						
		Water (liquid, ice-free) [1]						
		Oxygen [2]						
Food-safe		See declaration of conformity [1]						
Ambient temperature	[°C]	–35 ... 60						
Material fire test		UL94 HB						
Tubing characteristics		Suitable for energy chains						

1) More information: www.festo.com/catalogue/pun-h-f ➔ Support/Downloads.
2) Applies only to NT variants (colour: natural).

Operating pressure p as a function of temperature t

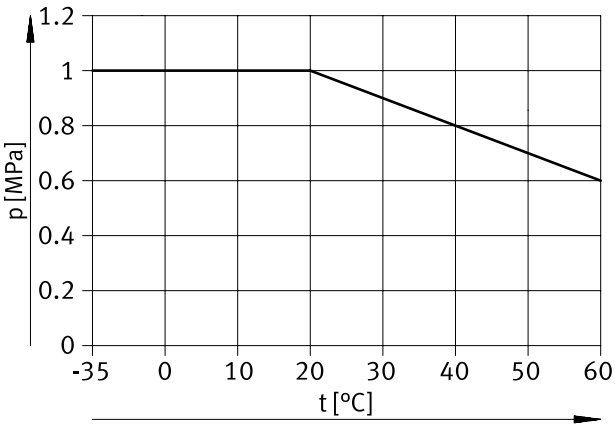

Operating pressure p as a function of temperature t (medium: water)

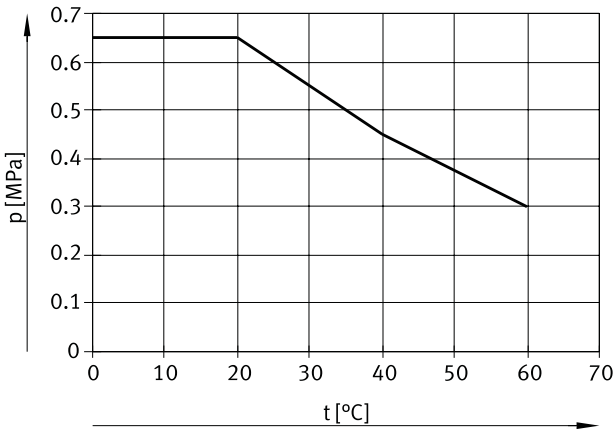

Materials

Shore hardness	D 52 ±3
Tubing	TPE-U(PU)
Note on materials	RoHS-compliant
LABS (PWIS) conformity	VDMA24364-B2-L
Application information	Tubing without printing TPE-U, ether-based

Datasheet

Dimensions and ordering data

O.D. [mm]	I.D. [mm]	Min. bending radius [mm]	Flow-relevant bending radius [mm]	Weight [kg/m]	Colour	Part no.	Type	PU[1] [m]
4	2.6	8	16	0.0084	Natural	**8153378**	**PUN-H-F-4X0.75-NT**	**50**
					Red	**8153379**	**PUN-H-F-4X0.75-RT**	**50**
					Blue	**8153381**	**PUN-H-F-4X0.75-BL**	**50**
					Translucent blue	**8153382**	**PUN-H-F-4X0.75-TBL**	**50**
					Green	**8153383**	**PUN-H-F-4X0.75-GN**	**50**
					Yellow	**8153384**	**PUN-H-F-4X0.75-GE**	**50**
					Black	**8153385**	**PUN-H-F-4X0.75-SW**	**50**
6	4	10	26	0.0181	Natural	**8153428**	**PUN-H-F-6X1-NT**	**50**
					Red	**8153386**	**PUN-H-F-6X1-RT**	**50**
					Blue	**8153388**	**PUN-H-F-6X1-BL**	**50**
					Translucent blue	**8153389**	**PUN-H-F-6X1-TBL**	**50**
					Green	**8153390**	**PUN-H-F-6X1-GN**	**50**
					Yellow	**8153391**	**PUN-H-F-6X1-GE**	**50**
					Black	**8153392**	**PUN-H-F-6X1-SW**	**50**
8	5.7	21	37	0.0285	Natural	**8153429**	**PUN-H-F-8X1.25-NT**	**50**
					Red	**8153393**	**PUN-H-F-8X1.25-RT**	**50**
					Blue	**8153395**	**PUN-H-F-8X1.25-BL**	**50**
					Translucent blue	**8153396**	**PUN-H-F-8X1.25-TBL**	**50**
					Green	**8153397**	**PUN-H-F-8X1.25-GN**	**50**
					Yellow	**8153398**	**PUN-H-F-8X1.25-GE**	**50**
					Black	**8153399**	**PUN-H-F-8X1.25-SW**	**50**
10	7	28	52	0.0461	Natural	**8153430**	**PUN-H-F-10X1.5-NT**	**50**
					Red	**8153400**	**PUN-H-F-10X1.5-RT**	**50**
					Blue	**8153402**	**PUN-H-F-10X1.5-BL**	**50**
					Translucent blue	**8153403**	**PUN-H-F-10X1.5-TBL**	**50**
					Green	**8153404**	**PUN-H-F-10X1.5-GN**	**50**
					Yellow	**8153405**	**PUN-H-F-10X1.5-GE**	**50**
					Black	**8153406**	**PUN-H-F-10X1.5-SW**	**50**
12	8	33	62	0.0723	Natural	**8153407**	**PUN-H-F-12X2-NT**	**50**
					Red	**8153408**	**PUN-H-F-12X2-RT**	**50**
					Blue	**8153410**	**PUN-H-F-12X2-BL**	**50**
					Translucent blue	**8153411**	**PUN-H-F-12X2-TBL**	**50**
					Green	**8153412**	**PUN-H-F-12X2-GN**	**50**
					Yellow	**8153413**	**PUN-H-F-12X2-GE**	**50**
					Black	**8153414**	**PUN-H-F-12X2-SW**	**50**
14	9.8	38	78	0.0911	Natural	**8153415**	**PUN-H-F-14X2-NT**	**50**
					Red	**8153416**	**PUN-H-F-14X2-RT**	**50**
					Blue	**8153417**	**PUN-H-F-14X2-BL**	**50**
					Black	**8153418**	**PUN-H-F-14X2-SW**	**50**
16	11	38	88	0.122	Natural	**8153419**	**PUN-H-F-16X2.5-NT**	**50**
					Red	**8153420**	**PUN-H-F-16X2.5-RT**	**50**
					Blue	**8153422**	**PUN-H-F-16X2.5-BL**	**50**
					Translucent blue	**8153423**	**PUN-H-F-16X2.5-TBL**	**50**
					Green	**8153424**	**PUN-H-F-16X2.5-GN**	**50**
					Yellow	**8153425**	**PUN-H-F-16X2.5-GE**	**50**
					Black	**8153426**	**PUN-H-F-16X2.5-SW**	**50**

1) Packaging unit

Type codes

001	Baureihe	
PUN	Kunststoffschlauch, Polyurethan	

002	Alternative Materialeigenschaft	
H	Hydrolysebeständig	

003	Zusatzeigenschaften	
SF	Robust und flexibel	

004	Rohr-/Schlauchaußendurchmesser x Wandstärke	
4x0,85	4x0,85 mm	
6x1,25	6x1,25 mm	
8x1,55	8x1,55 mm	
10x2	10x2 mm	
12x2,3	12x2,3 mm	
14x2,7	14x2,7 mm	
16x3,1	16x3,1 mm	
18x3,4	18x3,4 mm	
22x4,3	22x4,3 mm	
25x4,85	25x4,85 mm	

005	Farbe	
SW	Schwarz	
BL	Blau	

006	Packungseinheit [m]	
	Standard	
25	25 m	

Datasheet

Plastic tubing PUN-H-SF

With O.D. 4 ... 25 mm

Material: Polyurethane

Robust and flexible.
Resistant to kinking and hydrolysis.
High thermal and mechanical load capacities.

Operating and environmental conditions

Type		PUN-H-SF-4	PUN-H-SF-6	PUN-H-SF-8	PUN-H-SF-10	PUN-H-SF-12	PUN-H-SF-14	PUN-H-SF-16	PUN-H-SF-18	PUN-H-SF-22	PUN-H-SF-25
O.D.	[mm]	4	6	8	10	12	14	16	18	22	25
Pneumatic connection											
For push-in connector	[mm]	4	6	8	10	12	14	16	–	22	–
Temperature-dependent operating pressure	[MPa]	–0.095 ... 1.3 MPa ➔ graph									
	[bar]	–0.95 ... 13 bar									
	[psi]	–13.775 ... 188.5 psi									
Operating pressure for full temperature range	[MPa]	–0.095 ... 0.6 MPa									
	[bar]	–0.95 ... 6 bar									
	[psi]	–13.775 ... 87 psi									
Note on operating pressure		Water: max. 1 MPa at 25°C, max. 0.75 MPa at 40°C, max. 0.7 MPa at 60°C									
Operating medium		Compressed air to ISO 8573-1:2010 [7:–:–]									
		Water (liquid, ice-free) [1]									
Food-safe		See supplementary material information [1]									
Ambient temperature	[°C]	–35 ... 80									
Material fire test		UL94 HB									
Tubing characteristics		Suitable for energy chains									

1) More information: www.festo.com/catalogue/pun-h-sf ➔ Support/Downloads.

Operating pressure p as a function of temperature t

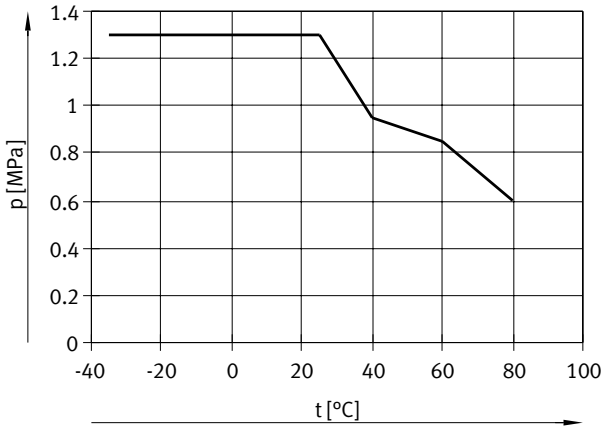

Operating pressure p as a function of temperature t (medium: water)

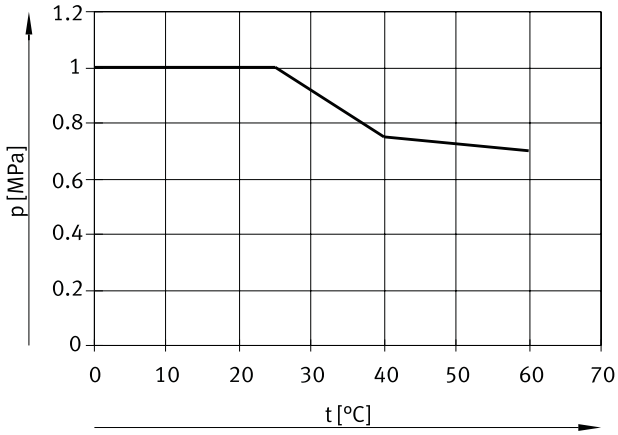

Materials

Shore hardness	D 54 +/-3
Tubing	TPE-U(PU)
Note on materials	RoHS-compliant
LABS (PWIS) conformity	VDMA24364-B2-L
Cleanroom class	Element installed statically, no meaningful evaluation possible according to ISO 14644-1
Application information	TPE-U, ether-based

Datasheet

Dimensions and ordering data

O.D. [mm]	I.D. [mm]	Min. bending radius [mm]	Flow-relevant bending radius [mm]	Weight [kg/m]	Colour	Part no.	Type	PU[1] [m]
4	2.3	7	12	0.01	Black	**8174911**	**PUN-H-SF-4X0.85-SW**	**50**
					Blue	**8174912**	**PUN-H-SF-4X0.85-BL**	**50**
6	3.5	12	25	0.025	Black	**8167899**	**PUN-H-SF-6X1.25-SW**	**50**
					Blue	**8167900**	**PUN-H-SF-6X1.25-BL**	**50**
8	4.9	15	35	0.04	Black	**8167901**	**PUN-H-SF-8X1.55-SW**	**50**
					Blue	**8167902**	**PUN-H-SF-8X1.55-BL**	**50**
10	6	16	42	0.061	Black	**8167905**	**PUN-H-SF-10X2-SW**	**50**
					Blue	**8167904**	**PUN-H-SF-10X2-BL**	**50**
12	7.4	21	49	0.085	Black	**8167906**	**PUN-H-SF-12X2.3-SW**	**50**
					Blue	**8167907**	**PUN-H-SF-12X2.3-BL**	**50**
14	8.6	26	60	0.118	Black	**8167908**	**PUN-H-SF-14X2.7-SW**	**50**
					Blue	**8167909**	**PUN-H-SF-14X2.7-BL**	**50**
16	9.85	30	73	0.145	Black	**8167910**	**PUN-H-SF-16X3.1-SW**	**50**
					Blue	**8167911**	**PUN-H-SF-16X3.1-BL**	**50**
18	11.2	36	90	0.188	Black	**8167913**	**PUN-H-SF-18X3.4-SW-25**	**25**
					Blue	**8167912**	**PUN-H-SF-18X3.4-BL-25**	**25**
22	13.4	44	110	0.302	Black	**8167914**	**PUN-H-SF-22X4.3-SW-25**	**25**
					Blue	**8167915**	**PUN-H-SF-22X4.3-BL-25**	**25**
25	15.3	55	130	0.372	Black	**8167917**	**PUN-H-SF-25X4.85-SW-25**	**25**
					Blue	**8167916**	**PUN-H-SF-25X4.85-BL-25**	**25**

1) Packaging unit

Type codes

001	Baureihe	
PUN	Kunststoffschlauch, Polyurethan	

002	Alternative Materialeigenschaft	
V0	Flammhemmend	

003	Rohr-/Schlauchaußendurchmesser x Wandstärke	
4x1	4x1 mm	
6x1	6x1 mm	
6x2	6x2 mm	
8x1,25	8x1,25 mm	
8x2	8x2 mm	
10x1,5	10x1,5 mm	
10x2	10x2 mm	
12x2	12x2 mm	
14x2	14x2 mm	
16x2	16x2 mm	
16x2,5	16x2,5 mm	

004	Farbe	
SW	Schwarz	
BL	Blau	
RT	Rot	
GN	Grün	
GE	Gelb	
BR	Braun	
WS	Weiß	

005	Ausführung	
C	Dickere Wandstärke	

Datasheet

Plastic tubing PUN-V0

Highly flexible single-sheath plastic tubing, flame-retardant

Material: Polyurethane

Note

As this tubing is flame-retardant, the colours differ from the standard colours.

Operating and environmental conditions

Type		PUN-V0-6	PUN-V0-8	PUN-V0-10	PUN-V0-16
O.D.	[mm]	6	8	10	16
Pneumatic connection					
For push-in connector	[mm]	6	8	10	16
For barbed connector	[mm]	4	6	–	–
For barbed connector with union nut	[mm]	4	6	–	–
Temperature-dependent operating pressure	[MPa]	–0.095 ... +1 ➔ graph			–0.095 ... +0.9 ➔ graph
	[bar]	–0.95 ... +10			–0.95 ... +9
	[psi]	–13.775 ... 145			–13.775 ... 130.5
Operating pressure for full temperature range	[MPa]	–0.095 ... +7			–0.095 ... +0.6
	[bar]	–0.95 ... +7			–0.95 ... +6
	[psi]	–13.775 ... 101.5			–13.775 ... 87
Note on operating pressure		Water: max. 0.6 MPa at max. 50°C			
Operating medium		Compressed air to ISO 8573-1:2010 [7:-:-] Water (liquid, ice-free)			
Ambient temperature	[°C]	–35 ... +60			
Note on ambient temperature		Unpressurised use up to 90 °C			
Material fire test		UL94 V-0 (for test specimen 3 mm thick)			
		UL94 V-2 (for test specimen 0.75 mm thick)			
Certification[1)]		German Technical Control Board (TÜV)			
Certificate-issuing authority		B 013277 0506 00			
Tubing characteristics		Suitable for energy chains			

1) More information: www.festo.com/catalogue/pun ➔ Support/Downloads.

Operating pressure p as a function of temperature t

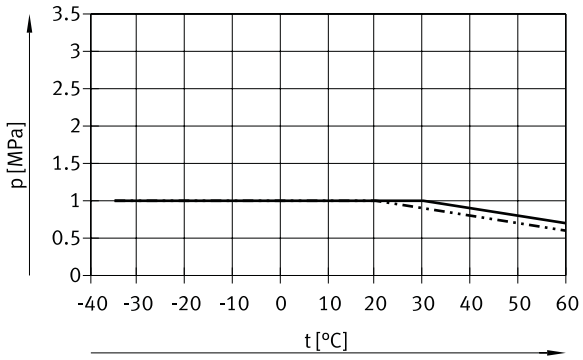

PUN-V0-6/8/10
PUN-V0-16

Materials

Shore hardness	D 54 ±3
Tubing	TPE-U(PU)
Note on materials	RoHS-compliant
LABS (PWIS) conformity	VDMA24364-B2-L

Datasheet

Dimensions and ordering data

O.D. [mm]	I.D. [mm]	Min. bending radius [mm]	Flow-relevant bending radius [mm]	Weight [kg/m]	Colour	Part no.	Type	PU[1] [m]
6	4	12	26.5	0.02	Black	**525438**	**PUN-V0-6x1-SW**	**50**
					Blue	**525442**	**PUN-V0-6x1-BL**	**50**
					Green	**525446**	**PUN-V0-6x1-GN**	**50**
					Red	**525450**	**PUN-V0-6x1-RT**	**50**
					White	**525454**	**PUN-V0-6x1-WS**	**50**
					Yellow	**525458**	**PUN-V0-6x1-GE**	**50**
					Brown	**525462**	**PUN-V0-6x1-BR**	**50**
8	5.7	18	37	0.031	Black	**525439**	**PUN-V0-8x1.25-SW**	**50**
					Blue	**525443**	**PUN-V0-8x1.25-BL**	**50**
					Green	**525447**	**PUN-V0-8x1.25-GN**	**50**
					Red	**525451**	**PUN-V0-8x1.25-RT**	**50**
					White	**525455**	**PUN-V0-8x1.25-WS**	**50**
					Yellow	**525459**	**PUN-V0-8x1.25-GE**	**50**
					Brown	**525463**	**PUN-V0-8x1.25-BR**	**50**
10	7	20	54	0.051	Black	**525440**	**PUN-V0-10x1.5-SW**	**50**
					Blue	**525444**	**PUN-V0-10x1.5-BL**	**50**
					Green	**525448**	**PUN-V0-10x1.5-GN**	**50**
					Red	**525452**	**PUN-V0-10x1.5-RT**	**50**
					White	**525456**	**PUN-V0-10x1.5-WS**	**50**
					Yellow	**525460**	**PUN-V0-10x1.5-GE**	**50**
					Brown	**525464**	**PUN-V0-10x1.5-BR**	**50**
16	11.8	50	90	0.122	Black	**570767**	**PUN-V0-16x2-SW**	**50**
					Blue	**570768**	**PUN-V0-16x2-BL**	**50**

1) Packaging unit

Datasheet

Plastic tubing PUN-V0-C

Highly flexible single-sheath plastic tubing, flame-retardant

For use in the immediate vicinity of welding applications.

Material: Polyurethane

Note

As this tubing is flame-retardant, the colours differ from the standard colours.

Operating and environmental conditions

Type		PUN-V0-4...-C	PUN-V0-6...-C	PUN-V0-8...-C	PUN-V0-10...-C	PUN-V0-12...-C	PUN-V0-14...-C	PUN-V0-16...-C
O.D.	[mm]	4	6	8	10	12	14	16
Pneumatic connection								
For push-in connector	[mm]	4	6	8	10	12	14	16
For barbed connector	[mm]	–	2	4	6	–	–	–
Temperature-dependent operating pressure	[MPa]	–0.095 ... +1 ➔ graph	–0.095 ... +3 ➔ graph	–0.095 ... +2 ➔ graph	–0.095 ... +1.6 ➔ graph	–0.095 ... +1 ➔ graph	–0.095 ... +0.9 ➔ graph	–0.095 ... +1 ➔ graph
	[bar]	–0.95 ... +10	–0.95 ... +30	–0.95 ... +20	–0.95 ... +16	–0.95 ... +10	–0.95 ... +9	–0.95 ... +10
	[psi]	–13,775 ... +145	–13,775 ... +435	–13,775 ... +290	–13,775 ... +232	–13,775 ... +145	–13,775 ... +130.5	–13,775 ... +145
Operating pressure for full temperature range	[MPa]	–0.095 ... +0.7	–0.095 ... +1.6	–0.095 ... +1.2	–0.095 ... +0.9	–0.095 ... +0.7	–0.095 ... +0.6	–0.095 ... +0.7
	[bar]	–0.95 ... +7	–0.95 ... +16	–0.95 ... +12	–0.95 ... +9	–0.95 ... +7	–0.95 ... +6	–0.95 ... +7
	[psi]	–13,775 ... +101.5	–13,775 ... +232	–13,775 ... +174	–13,775 ... +130.5	–13,775 ... +101.5	–13,775 ... +87	–13,775 ... +101.5
Note on operating pressure[1)]		Water: max. 0.6 MPa at max. 50°C						
Operating medium		Compressed air to ISO 8573-1:2010 [7:-:-] Water (liquid, ice-free)						
Ambient temperature	[°C]	–35 ... +60						
Note on ambient temperature		Unpressurised use up to 90 °C						
Material fire test		UL94 V-0 (for test specimen 3 mm thick)						
		UL94 V-2 (for test specimen 0.75 mm thick)						
Certification[2)]		German Technical Control Board (TÜV)						
Certificate-issuing authority		B 013277 0506 00						
Tubing characteristics		Suitable for energy chains						

1) For O.D. 6, 8 and 10, the following applies: For applications with welding spatter ➔ max. 1 MPa at 20°C, max. 0.9 MPa at 40°C, max. 0.7 MPa at 60°C
2) More information: www.festo.com/catalogue/pun ➔ Support/Downloads.

Operating pressure p as a function of temperature t

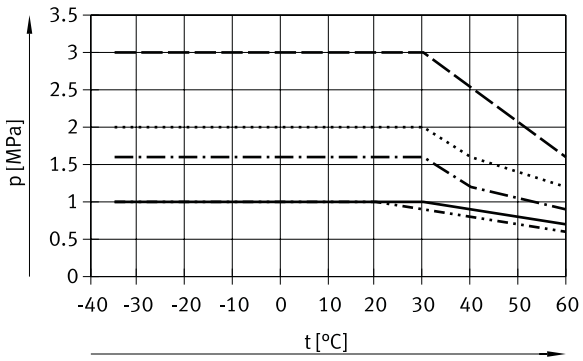

PUN-V0-...-C
PUN-V0-14x2-...-C

For applications without welding spatter
PUN-V0-6x2-...-C
PUN-V0-8x2-...-C
PUN-V0-10x2-...-C

Datasheet

Materials	
Shore hardness	D 54 ±3
Tubing	TPE-U(PU)
Note on materials	RoHS-compliant
LABS (PWIS) conformity	VDMA24364-B2-L

Datasheet

Dimensions and ordering data

O.D. [mm]	I.D. [mm]	Min. bending radius [mm]	Flow-relevant bending radius [mm]	Weight [kg/m]	Colour	Part no.	Type	PU[1] [m]
4	2	10	20	0.012	Black	**570349**	**PUN-V0-4x1-SW-C**	**50**
					Blue	**570350**	**PUN-V0-4x1-BL-C**	**50**
6	2	7	24	0.032	Black	**561698**	**PUN-V0-6x2-SW-C**	**50**
					Blue	**561702**	**PUN-V0-6x2-BL-C**	**50**
					Green	**561706**	**PUN-V0-6x2-GN-C**	**50**
					Red	**561710**	**PUN-V0-6x2-RT-C**	**50**
					White	**561714**	**PUN-V0-6x2-WS-C**	**50**
					Yellow	**561718**	**PUN-V0-6x2-GE-C**	**50**
					Brown	**561722**	**PUN-V0-6x2-BR-C**	**50**
8	4	9	35	0.049	Black	**561699**	**PUN-V0-8x2-SW-C**	**50**
					Blue	**561703**	**PUN-V0-8x2-BL-C**	**50**
					Green	**561707**	**PUN-V0-8x2-GN-C**	**50**
					Red	**561711**	**PUN-V0-8x2-RT-C**	**50**
					White	**561715**	**PUN-V0-8x2-WS-C**	**50**
					Yellow	**561719**	**PUN-V0-8x2-GE-C**	**50**
					Brown	**561723**	**PUN-V0-8x2-BR-C**	**50**
10	6	12	42	0.064	Black	**561700**	**PUN-V0-10x2-SW-C**	**50**
					Blue	**561704**	**PUN-V0-10x2-BL-C**	**50**
					Green	**561708**	**PUN-V0-10x2-GN-C**	**50**
					Red	**561712**	**PUN-V0-10x2-RT-C**	**50**
					White	**561716**	**PUN-V0-10x2-WS-C**	**50**
					Yellow	**561720**	**PUN-V0-10x2-GE-C**	**50**
					Brown	**561724**	**PUN-V0-10x2-BR-C**	**50**
12	8	19	55	0.08	Black	**561701**	**PUN-V0-12x2-SW-C**	**50**
					Blue	**561705**	**PUN-V0-12x2-BL-C**	**50**
					Green	**561709**	**PUN-V0-12x2-GN-C**	**50**
					Red	**561713**	**PUN-V0-12x2-RT-C**	**50**
					White	**561717**	**PUN-V0-12x2-WS-C**	**50**
					Yellow	**561721**	**PUN-V0-12x2-GE-C**	**50**
					Brown	**561725**	**PUN-V0-12x2-BR-C**	**50**
14	9.8	45	70	0.096	Black	**570351**	**PUN-V0-14x2-SW-C**	**50**
					Blue	**570352**	**PUN-V0-14x2-BL-C**	**50**
16	11	50	90	0.147	Black	**570353**	**PUN-V0-16x2.5-SW-C**	**50**
					Blue	**570354**	**PUN-V0-16x2.5-BL-C**	**50**

1) Packaging unit

Ordering data – Modular product system

Ordering table (minimum order quantity 3000 m for tubing O.D. ≤ 8 mm, 1500 mm for tubing O.D. > 8 mm, rounded value 25 m)

Size	3	4	6	8	10	12	14	16	Conditions	Code	Enter code
Module no.	**553573**										
Function	Polyurethane tubing, standard O.D.									**PUN**	PUN
Alternative material characteristic	Standard										
	Hydrolysis-resistant									**-H**	
	–	Anti-static						–		**-CM**	
	–	–	Flame-retardant			–	–			**-V0**	
	–	Resistant to welding spatter								**-V0C**	
Tubing O.D. [mm]	3	–	–	–	–	–	–	–		**-3**	
	–	4	–	–	–	–	–	–		**-4**	
	–	–	6	–	–	–	–	–		**-6**	
	–	–	–	8	–	–	–	–		**-8**	
	–	–	–	–	10	–	–	–		**-10**	
	–	–	–	–	–	12	–	–		**-12**	
	–	–	–	–	–	–	14	–		**-14**	
	–	–	–	–	–	–	–	16		**-16**	
Colour	Silver								[1] [2]	**-SI**	
	Blue								[1] [3]	**-BL**	
	Translucent blue								[4]	**-TBL**	
	Black								[3]	**-SW**	
	Translucent black								[4]	**-TSW**	
	Yellow								[1]	**-GE**	
	Translucent yellow								[4]	**-TGE**	
	Green								[1]	**-GN**	
	Translucent green								[4]	**-TGN**	
	Red								[1]	**-RT**	
	Translucent red								[4]	**-TRT**	
	Brown								[1]	**-BR**	
	White								[1]	**-WS**	
	Natural								[1] [3] [4]	**-NT**	
Labelling text (on request)	Standard										
	Customer-specific tubing inscription								[5]	**-TXT**	
Packaging unit [m]	25									**-25**	
	50									**-50**	
	100									**-100**	
	200						–	–		**-200**	
	300					–	–	–		**-300**	
	400				–	–	–	–		**-400**	
	500			–	–	–	–	–		**-500**	
Packaging	Cardboard box								[6]	**-CB**	
	Reel								[7]	**-HA**	

[1] SI, BL, GE, GN, RT, BR, WS, NT — Not with alternative material characteristic CM
[2] SI — Not with alternative material characteristic V0, V0C0
[3] BL, SW, NT — In combination with alternative material characteristic H: food-safe
[4] TBL, TSW, TGE, TGN, TRT, NT — Only with alternative material characteristic H
[5] TXT — Not in the Online Shop.
Festo logo, order code, TÜV, operating pressure, dimensions omitted
[6] CB — Only with packaging unit 25, 50
[7] HA — Not with packaging unit 25, 50
Not with alternative material characteristic V0, V0C, CM

Type codes

001	Series	
PAN	Standard O.D. tubing	

002	Function	
PAN	Polyamide tubing, standard O.D.	

003	Pipe/tubing O.D. x wall thickness	
4x0,75	4x0.75 mm	
6x1	6x1 mm	
8x1,25	8x1.25 mm	
10x1,5	10x1.5 mm	
12x1,75	12x1.75 mm	
14x2	14x2 mm	
16x2	16x2 mm	

004	Colour	
NT	Natural	
SW	Black	
BL	Blue	
SI	Silver	
RT	Red	
GN	Green	
GE	Yellow	

005	Packaging unit [m]	
	Standard	
100	100 m	
200	200 m	
300	300 m	
400	400 m	
500	500 m	

Datasheet

Plastic tubing PAN

High thermal and mechanical load capacities.

Material: Polyamide

Operating and environmental conditions

Type		PAN-4	PAN-6	PAN-8	PAN-10	PAN-12	PAN-14	PAN-16
O.D.	[mm]	4	6	8	10	12	14	16
Pneumatic connection								
For push-in connector	[mm]	4	6	8	10	12	14	16
For barbed connector	[mm]	3	4	6	–	–	–	–
For barbed connector with union nut	[mm]	3	4	6	–	–	–	–
Temperature-dependent operating pressure	[MPa]	–0.095 ... +1.5 ➔ graph	–0.095 ... +1.9 ➔ graph	–0.095 ... +1.5 ➔ graph	–0.095 ... +1.7 ➔ graph			–0.095 ... +1.4 ➔ graph
	[bar]	–0.95 ... +15	–0.95 ... +19	–0.95 ... +15	–0.95 ... +17			–0.95 ... +14
	[psi]	–13,775 ... +217.5	–13,775 ... +275.5	–13,775 ... +217.5	–13,775 ... +246.5			–13,775 ... +203
Operating medium		Compressed air to ISO 8573-1:2010 [7:–:–]						
Ambient temperature	[°C]	–30 ... +80						
Certification		German Technical Control Board (TÜV)						
Certificate-issuing authority		B 013277 0506 00						
Maritime classification		See certificate (colours: silver and natural)[1]						
Tubing characteristics		Suitable for energy chains						

1) More information: www.festo.com/catalogue/pan ➔ Support/Downloads.

Operating pressure p as a function of temperature t

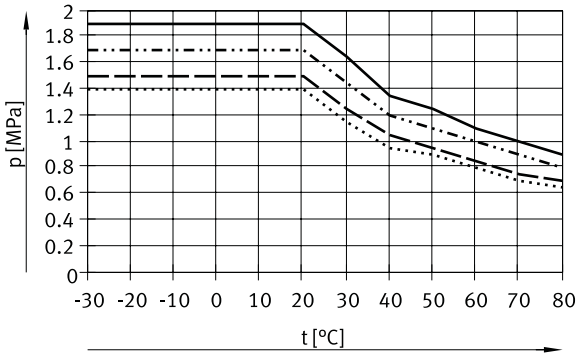

PAN-6
PAN-4/8
PAN-10/12/14
PAN-16

Materials

Shore hardness	D 55 ±3
Tubing	TPE-A
Note on materials	RoHS-compliant
LABS (PWIS) conformity	VDMA24364-B2-L

Datasheet

Dimensions – Reel

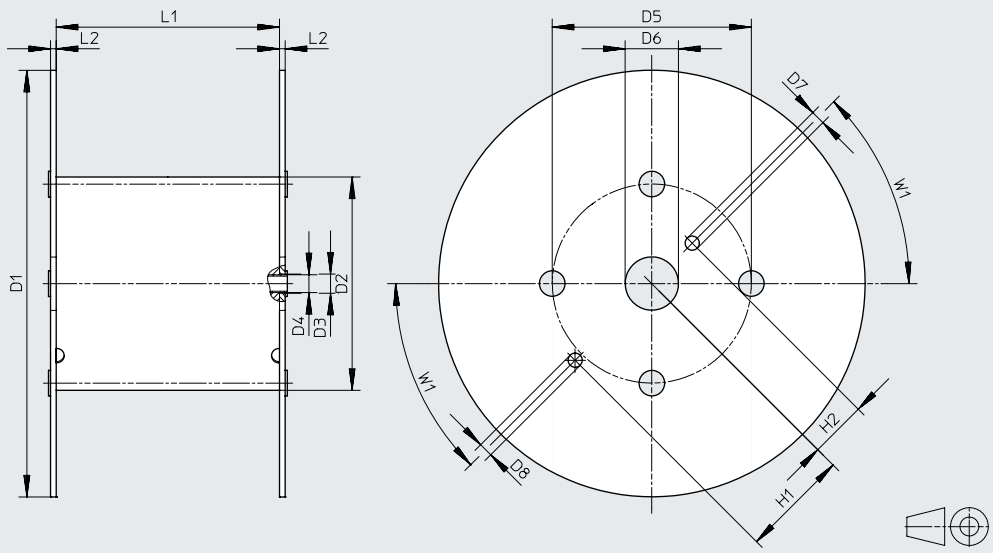

Type	D1 ø	D2 ø	D3 ø	D4 ø	D5 ø	D6 ø	D7 ø	D8 ø	H1	H2	L1	L2	W1
For PAN-4x0.75-...-500	545	246	21	20	216	75	20	20	152.5	80.5	128	8	45°
For PAN-6x1-...-500	545	246	21	20	216	75	20	20	152.5	80.5	128	8	45°
For PAN-8x1.25-...-400	545	310	21	20	280	75	20	20	152.5	80.5	254	8	45°
For PAN-10x1.5-...-300	600	310	21	20	280	75	20	20	152.5	80.5	254	8	45°
For PAN-12x1.75-...-200	600	310	21	20	280	75	20	20	152.5	80.5	254	8	45°
For PAN-16x2-...-100	545	310	21	20	280	75	20	20	152.5	80.5	254	8	45°

Dimensions and ordering data

O.D. [mm]	I.D. [mm]	Min. bending radius [mm]	Flow-relevant bending radius [mm]	Weight [kg/m]	Colour	Part no.	Type	PU[1] [m]
4	2.9	12	18	0.006	Silver	**152697**	**PAN-4x0.75-SI**	**50**
					Silver	**553888**	**PAN-4x0.75-SI-500**	**500**
					Blue	**553906**	**PAN-4x0.75-BL**	**50**
					Blue	**553894**	**PAN-4x0.75-BL-500**	**500**
					Black	**553912**	**PAN-4x0.75-SW**	**50**
					Black	**553900**	**PAN-4x0.75-SW-500**	**500**
					Natural	**546284**	**PAN-4x0.75-NT**	**50**
					Green	**553918**	**PAN-4x0.75-GN**	**50**
					Red	**553924**	**PAN-4x0.75-RT**	**50**
					Yellow	**553930**	**PAN-4x0.75-GE**	**50**
6	4	14	32	0.016	Silver	**152699**	**PAN-6x1-SI**	**50**
					Silver	**553889**	**PAN-6x1-SI-500**	**500**
					Blue	**553907**	**PAN-6x1-BL**	**50**
					Blue	**553895**	**PAN-6x1-BL-500**	**500**
					Black	**553913**	**PAN-6x1-SW**	**50**
					Black	**553901**	**PAN-6x1-SW-500**	**500**
					Natural	**546285**	**PAN-6x1-NT**	**50**
					Green	**553919**	**PAN-6x1-GN**	**50**
					Red	**553925**	**PAN-6x1-RT**	**50**
					Yellow	**553931**	**PAN-6x1-GE**	**50**

1) Packaging unit

Datasheet

Dimensions and ordering data

O.D. [mm]	I.D. [mm]	Min. bending radius [mm]	Flow-relevant bending radius [mm]	Weight [kg/m]	Colour	Part no.	Type	PU[1] [m]
8	5.9	22	43	0.024	Silver	**152700**	**PAN-8x1.25-SI**	**50**
					Silver	**553890**	**PAN-8x1.25-SI-400**	**400**
					Blue	**553908**	**PAN-8x1.25-BL**	**50**
					Blue	**553896**	**PAN-8x1.25-BL-400**	**400**
					Black	**553914**	**PAN-8x1.25-SW**	**50**
					Black	**553902**	**PAN-8x1.25-SW-400**	**400**
					Natural	**546286**	**PAN-8x1.25-NT**	**50**
					Green	**553920**	**PAN-8x1.25-GN**	**50**
					Red	**553926**	**PAN-8x1.25-RT**	**50**
					Yellow	**553932**	**PAN-8x1.25-GE**	**50**
10	7	27	58	0.042	Silver	**152701**	**PAN-10x1.5-SI**	**50**
					Silver	**553891**	**PAN-10x1.5-SI-300**	**300**
					Blue	**553909**	**PAN-10x1.5-BL**	**50**
					Blue	**553897**	**PAN-10x1.5-BL-300**	**300**
					Black	**553915**	**PAN-10x1.5-SW**	**50**
					Black	**553903**	**PAN-10x1.5-SW-300**	**300**
					Natural	**546287**	**PAN-10x1.5-NT**	**50**
					Green	**553921**	**PAN-10x1.5-GN**	**50**
					Red	**553927**	**PAN-10x1.5-RT**	**50**
					Yellow	**553933**	**PAN-10x1.5-GE**	**50**
12	8.4	29	64	0.060	Silver	**152702**	**PAN-12x1.75-SI**	**50**
					Silver	**553892**	**PAN-12x1.75-SI-200**	**200**
					Blue	**553910**	**PAN-12x1.75-BL**	**50**
					Blue	**553898**	**PAN-12x1.75-BL-200**	**200**
					Black	**553916**	**PAN-12x1.75-SW**	**50**
					Black	**553904**	**PAN-12x1.75-SW-200**	**200**
					Natural	**546288**	**PAN-12x1.75-NT**	**50**
					Green	**553922**	**PAN-12x1.75-GN**	**50**
					Red	**553928**	**PAN-12x1.75-RT**	**50**
					Yellow	**553934**	**PAN-12x1.75-GE**	**50**
14	10	50	80	0.077	Silver	**570392**	**PAN-14x2-SI**	**50**
16	12	67	94	0.092	Silver	**152703**	**PAN-16x2-SI**	**50**
					Silver	**553893**	**PAN-16x2-SI-100**	**100**
					Blue	**553911**	**PAN-16x2-BL**	**50**
					Blue	**553899**	**PAN-16x2-BL-100**	**100**
					Black	**553917**	**PAN-16x2-SW**	**50**
					Black	**553905**	**PAN-16x2-SW-100**	**100**
					Natural	**546289**	**PAN-16x2-NT**	**50**
					Green	**553923**	**PAN-16x2-GN**	**50**
					Red	**553929**	**PAN-16x2-RT**	**50**
					Yellow	**553935**	**PAN-16x2-GE**	**50**

1) Packaging unit

Type codes

001	Series	
PAN	Standard O.D. tubing	

002	Alternative material characteristic	
R	Sturdy	

003	Pipe/tubing O.D. x wall thickness	
4x0,75	4x0.75 mm	
6x1,1	6x1.1 mm	
8x1,5	8x1.5 mm	
10x1,9	10x1.9 mm	
12x2,2	12x2.2 mm	
16x3	16x3 mm	
22x2	22x2 mm	
28x2,5	28x2.5 mm	

004	Colour	
SW	Black	
SI	Silver	

Datasheet

Plastic tubing PAN-R
With O.D. 4 ... 16 mm

For applications with a high pressure range.

Material: Polyamide

Operating and environmental conditions

Type		PAN-R-4	PAN-R-6	PAN-R-8	PAN-R-10	PAN-R-12	PAN-R-16
O.D.	[mm]	4	6	8	10	12	16
Pneumatic connection							
For push-in connector	[mm]	4	6	8	10	12	16
Temperature-dependent operating pressure	[MPa]	–0.095 ... +3.5 ➔ graph					
	[bar]	–0.95 ... +35					
	[psi]	–13,775 ... +507.5					
Operating medium		Compressed air to ISO 8573-1:2010 [7:–:–]					
Ambient temperature	[°C]	–30 ... +80					
Certification		German Technical Control Board (TÜV)					
Certificate-issuing authority		B 013277 0506 00					
Tubing characteristics		Suitable for energy chains					

Operating pressure p as a function of temperature t

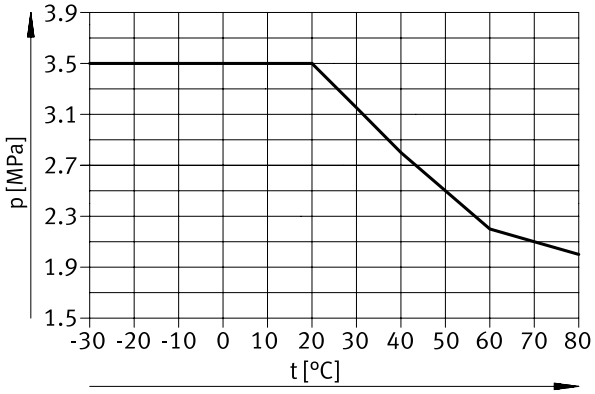

Materials

Shore hardness	D 62 ±3
Tubing	TPE-A
Note on materials	RoHS-compliant
LABS (PWIS) conformity	VDMA24364-B2-L

Dimensions and ordering data

O.D. [mm]	I.D. [mm]	Min. bending radius [mm]	Flow-relevant bending radius [mm]	Weight [kg/m]	Colour	Part no.	Type	PU[1] [m]
4	2.5	10	16	0.0079	Silver	**541674**	**PAN-R-4x0.75-SI**	**50**
6	3.8	16	21	0.0174		**541675**	**PAN-R-6x1.1-SI**	**50**
8	5	20	29	0.0316		**541676**	**PAN-R-8x1.5-SI**	**50**
10	6.2	25	44	0.0498		**541677**	**PAN-R-10x1.9-SI**	**50**
12	7.6	30	46	0.0698		**541678**	**PAN-R-12x2.2-SI**	**50**
16	10	42	73	0.1262		**541679**	**PAN-R-16x3-SI**	**50**

1) Packaging unit

Datasheet

Plastic tubing PAN-R
With O.D. 22 and 28 mm

High thermal and mechanical load capacities.

Material: Polyamide

Operating and environmental conditions

Type		PAN-R-22	PAN-R-28
O.D.	[mm]	22	28
Pneumatic connection			
For push-in connector	[mm]	22	28
Temperature-dependent operating pressure	[bar]	–0.95 ... +14 ➔ graph	
Operating medium		Compressed air to ISO 8573-1:2010 [7:–:–]	
Ambient temperature	[°C]	–30 ... +80	

Operating pressure p as a function of temperature t

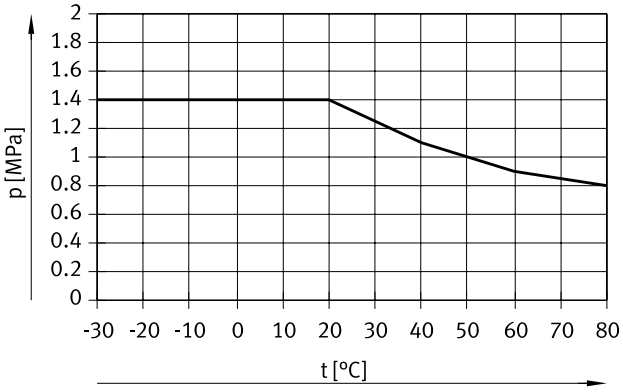

Note

When using the pipe cutter ZR to cut tubing to length, we recommend rotating the tube approx. 90° at the start of the cutting process.

Rotating the tube gives a drawing cut so that the tube can be cut with a significantly lower force. This also minimises deformation of the tube.

Materials

Shore hardness	D 62 ±3
Tubing	TPE-A
Note on materials	RoHS-compliant
LABS (PWIS) conformity	VDMA24364-B2-L

Dimensions and ordering data

O.D. [mm]	I.D. [mm]	Flow-relevant bending radius [mm]	Weight [kg/m]	Colour	Part no.	Type	PU[1] [m]
22	18	350	0.131	Black	**8036207**	**PAN-R-22x2-SW**	**50**
28	23	350	0.207		**8036208**	**PAN-R-28x2.5-SW**	**50**

1) Packaging unit

Type codes

001	Series	
PAN	Standard O.D. tubing	

002	Alternative material characteristic	
MF	Automotive approval certificate (DIN 73378)	

003	Pipe/tubing O.D. x wall thickness	
4x0,75	4x0.75 mm	
6x1	6x1 mm	
8x1	8x1 mm	
10x1,25	10x1.25 mm	
12x1,5	12x1.5 mm	
14x2	14x2 mm	
16x2	16x2 mm	

004	Colour	
SW	Black	

005	Packaging unit [m]	
	Standard	
500	500 m	

Datasheet

Plastic tubing PAN-MF

High thermal and mechanical load capacities.
Meets the requirements to DIN 73378 "Polyamide tubing for use in motor vehicles".

Material: Polyamide

Operating and environmental conditions

Type		PAN-MF-4	PAN-MF-6	PAN-MF-8	PAN-MF-10	PAN-MF-12	PAN-MF-14	PAN-MF-16
O.D.	[mm]	4	6	8	10	12	14	16
Pneumatic connection								
For push-in connector	[mm]	4	6	8	10	12	14	16
Temperature-dependent operating pressure	[MPa]	–0.095 ... +3.1 ➔ graph	–0.095 ... +2.7 ➔ graph	–0.095 ... +1.9 ➔ graph			–0.095 ... +2.2 ➔ graph	–0.095 ... +1.9 ➔ graph
	[bar]	–0.95 ... +31	–0.95 ... +27	–0.95 ... +19			–0.95 ... +22	–0.95 ... +19
	[psi]	–13,775 ... +449.5	–13,775 ... +391.5	–13,775 ... +275.5			–13,775 ... +3192	–13,775 ... +275.5
Conforms to		DIN 73378-PA12-PHL						
Operating medium		Compressed air to ISO 8573-1:2010 [7:–:–]						
		Mineral oil						
Ambient temperature	[°C]	–60 ... +100						
Tubing characteristics		Suitable for energy chains						

Operating pressure p as a function of temperature t

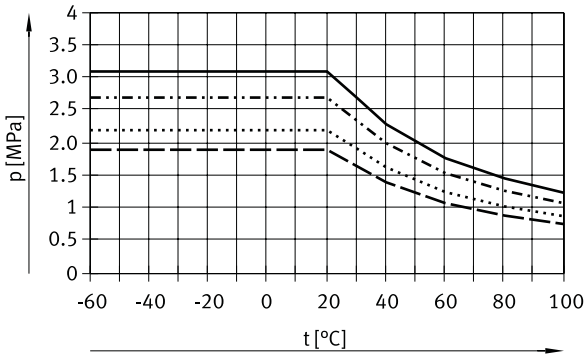

PAN-MF-4
PAN-MF-6
PAN-MF-8/10/12/16
PAN-MF-14

Materials

Shore hardness	D 65 ±3
Tubing	PA12-P
Note on materials	RoHS-compliant
LABS (PWIS) conformity	VDMA24364-B2-L

Datasheet

Dimensions – Reel

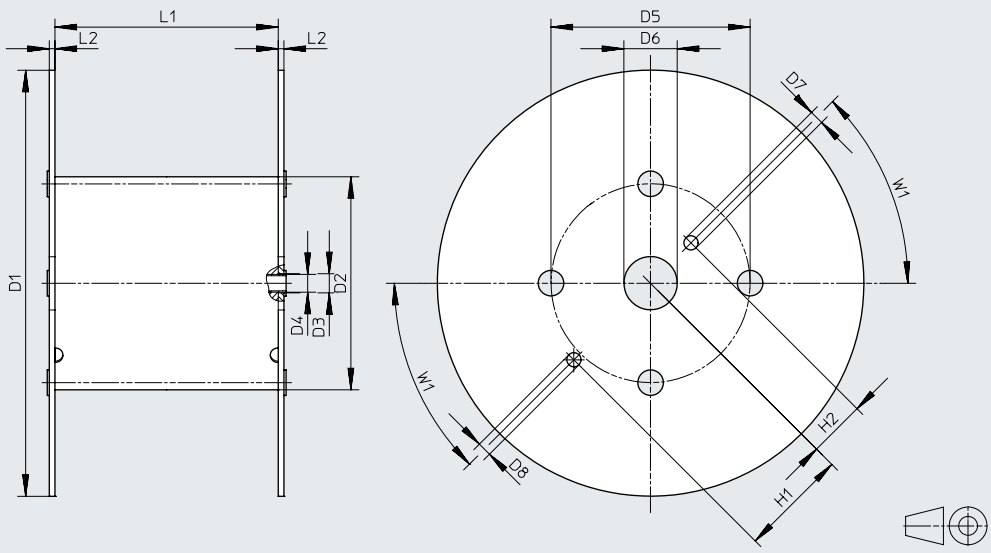

Type	D1 ø	D2 ø	D3 ø	D4 ø	D5 ø	D6 ø	D7 ø	D8 ø	H1	H2	L1	L2	W1
For PAN-MF-4x0.75-...-500	545	246	21	20	216	75	20	20	152.5	80.5	128	8	45°
For PAN-MF-6x1-...-500	600	310	21	20	280	75	20	20	152.5	80.5	114	8	45°

Dimensions and ordering data

O.D. [mm]	I.D. [mm]	Min. bending radius [mm]	Flow-relevant bending radius [mm]	Weight [kg/m]	Colour	Part no.	Type	PU[1] [m]
4	2.5	10	15	0.008	Black	**570357**	**PAN-MF-4x0.75-SW**	**50**
						572091	**PAN-MF-4x0.75-SW-500**	**500**
6	4	15	35	0.016		**570358**	**PAN-MF-6x1-SW**	**50**
						572093	**PAN-MF-6x1-SW-500**	**500**
8	6	35	50	0.022		**570359**	**PAN-MF-8x1-SW**	**50**
10	7.5	45	65	0.035		**570360**	**PAN-MF-10x1.25-SW**	**50**
12	9	50	70	0.051		**570361**	**PAN-MF-12x1.5-SW**	**50**
14	10	50	75	0.077		**570362**	**PAN-MF-14x2-SW**	**50**
16	12	75	130	0.09		**570363**	**PAN-MF-16x2-SW**	**50**

1) Packaging unit

Type codes

001	Series	
PAN	Standard O.D. tubing	

002	Alternative material characteristic	
V0	Flame-retardant	

003	Colour	
SW	Black	
BL	Blue	
RT	Red	
GN	Green	
GE	Yellow	
WS	White	

Datasheet

Plastic tubing PAN-V0

PVC casing, flame-retardant. The tubing casing must be cut to length X (table ➔ 49) before being inserted in the push-in fitting QS-V0.

For use in the immediate vicinity of welding applications

The tubing cutter PAN-V0S is the perfect tool for this task. The tubing cutter PAN-V0S will always cut the casing to the right length.

Material:
Polyvinyl chloride (outer tubing)
Polyamide (inner tubing)

Operating and environmental conditions

Type		PAN-V0-4	PAN-V0-6	PAN-V0-8	PAN-V0-10	PAN-V0-12
O.D.	[mm]	6	8	10	12	14
Pneumatic connection						
For push-in connector	[mm]	4	6	8	10	12
Temperature-dependent operating pressure	[MPa]	–0.095 ... +1.2 ➔ graph				
	[bar]	–0.95 ... +12				
	[psi]	–13.775 ... +174				
Operating pressure for entire temperature range	[MPa]	–0.095 ... +0.3				
	[bar]	–0.95 ... +3				
	[psi]	–13.775 ... +43.5				
Note on operating pressure		Mineral oil: max. 0.3 MPa, max. 90°C Water: max. 0.3 MPa at max. 90°C				
Operating medium		Compressed air to ISO 8573-1:2010 [7:-:-] Mineral oil Water (liquid, ice-free)				
Ambient temperature	[°C]	–30 ... +90				
Material fire test		UL94 V-0 (casing)				
Tubing characteristics		Suitable for energy chains				

Operating pressure p as a function of temperature t

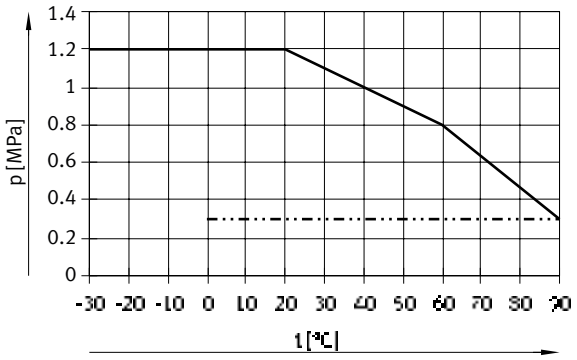

Air
Water and mineral oil

Materials

Shore hardness	Outside tubing	A 72 ±4
	Inside tubing	D 57 ±3
Tubing	Outside tubing	PVC-P
	Inside tubing	PA12-P
Note on materials		RoHS-compliant
LABS (PWIS) conformity		VDMA24364-B2-L

Datasheet

Dimensions and ordering data

O.D. [mm]	O.D. for push-in fittings [mm]	I.D. [mm]	Min. bending radius [mm]	Flow-relevant bending radius [mm]	Max. cut length X [mm]	Weight [kg/m]	Colour	Part no.	Type	PU[1] [m]
6	4	2.5	10	20	15	0.0335	Blue	**132899**	**PAN-V0-4x0.75-BL**	**50**
8	6	4	13	30	17	0.049	Black	**160550**	**PAN-V0-6x1-SW**	**50**
							Blue	**132905**	**PAN-V0-6x1-BL**	**50**
							Green	**525470**	**PAN-V0-6x1-GN**	**50**
							Red	**525474**	**PAN-V0-6x1-RT**	**50**
							White	**525478**	**PAN-V0-6x1-WS**	**50**
							Yellow	**525482**	**PAN-V0-6x1-GE**	**50**
10	8	6	24	45	18	0.065	Black	**160551**	**PAN-V0-8x1-SW**	**50**
							Blue	**132906**	**PAN-V0-8x1-BL**	**50**
							Green	**525471**	**PAN-V0-8x1-GN**	**50**
							Red	**525475**	**PAN-V0-8x1-RT**	**50**
							White	**525479**	**PAN-V0-8x1-WS**	**50**
							Yellow	**525483**	**PAN-V0-8x1-GE**	**50**
12	10	7.5	34	56	20	0.088	Black	**160552**	**PAN-V0-10x1.25-SW**	**50**
							Blue	**132907**	**PAN-V0-10x1.25-BL**	**50**
							Green	**525472**	**PAN-V0-10x1.25-GN**	**50**
							Red	**525476**	**PAN-V0-10x1.25-RT**	**50**
							White	**525480**	**PAN-V0-10x1.25-WS**	**50**
							Yellow	**525484**	**PAN-V0-10x1.25-GE**	**50**
14	12	9	43	65	23	0.133	Black	**160553**	**PAN-V0-12x1.5-SW**	**50**
							Blue	**525469**	**PAN-V0-12x1.5-BL**	**50**
							Green	**525473**	**PAN-V0-12x1.5-GN**	**50**
							Red	**525477**	**PAN-V0-12x1.5-RT**	**50**
							White	**525481**	**PAN-V0-12x1.5-WS**	**50**
							Yellow	**525485**	**PAN-V0-12x1.5-GE**	**50**

1) Packaging unit

Ordering data – Modular product system

Ordering table (minimum order quantity 3000 m, rounded value 25 m)

Size	4	6	8	10	12	14	16	Conditions	Code	Enter code
Module no.	**553610**									
Function	Polyamide tubing, standard O.D.								**PAN**	PAN
Alternative material characteristic	Standard									
	Automotive certification (DIN 73378)								**-MF**	
	Sturdy								**-R**	
Tubing O.D. [mm]	4	–	–	–	–	–	–		**-4**	
	–	6	–	–	–	–	–		**-6**	
	–	–	8	–	–	–	–		**-8**	
	–	–	–	10	–	–	–		**-10**	
	–	–	–	–	12	–	–		**-12**	
	–	–	–	–	–	14	–		**-14**	
	–	–	–	–	–	–	16		**-16**	
Colour	Silver								**-SI**	
	Blue								**-BL**	
	Black								**-SW**	
	Yellow								**-GE**	
	Green								**-GN**	
	Red								**-RT**	
	Brown								**-BR**	
	White								**-WS**	
	Natural								**-NT**	
Labelling text (on request)	Standard									
	Customer-specific tubing inscription							[1]	**-TXT**	
Packaging unit [m]	25								**-25**	
	50								**-50**	
	100						–		**-100**	
	200					–	–		**-200**	
	300				–	–	–		**-300**	
	400			–	–	–	–		**-400**	
	500		–	–	–	–	–		**-500**	
Packaging	Cardboard box							[2]	**-CB**	
	Reel							[3]	**-HA**	

[1] TXT Only on request
[2] CB Only with packaging unit 25, 50
[3] HA Not with packaging unit 25, 50

Type codes

001	Series	
PFAN	Plastic tubing	

002	Pipe/tubing O.D. x wall thickness	
3x0,5	3x0.5 mm	
4x0,75	4x0.75 mm	
6x1	6x1 mm	
8x1,25	8x1.25 mm	
10x1,5	10x1.5 mm	
12x1,75	12x1.75 mm	

003	Colour	
NT	Natural	

Datasheet

Plastic tubing PFAN

Pneumatic tubing with resistance to high temperatures and chemicals.

Material: Perfluoroalkoxy alkane

Suitable for contact with food.

Operating and environmental conditions

Type		PFAN-3	PFAN-4	PFAN-6	PFAN-8	PFAN-10	PFAN-12
O.D.	[mm]	3	4	6	8	10	12
Pneumatic connection							
For push-in connector	[mm]	3	4	6	8	10	12
For barbed connector	[mm]	2	3	4	6	–	–
For barbed connector with union nut	[mm]	–	3	4	6	–	–
Temperature-dependent operating pressure	[MPa]	–0.095 ... +1.5 ➔ graph		–0.095 ... +1.6 ➔ graph	–0.095 ... +1.5 ➔ graph	–0.095 ... +1.6 ➔ graph	
	[bar]	–0.95 ... +15		–0.95 ... +16	–0.95 ... +15	–0.95 ... +16	
	[psi]	–13.775 ... + 217.5		–13.775 ... +232	–13.775 ... +217.5	–13.775 ... + 232	
Operating pressure for full temperature range	[MPa]	–0.095 ... +0.6		–0.095 ... +0.7	–0.095 ... +0.6	–0.095 ... +0.7	
	[bar]	–0.095 ... +6		–0.095 ... +7	–0.095 ... +6	–0.095 ... +7	
	[psi]	–13.775 ... + 87		–13.775 ... +101.5	–13.775 ... +87	–13.775 ... +101.5	
Note on operating pressure		Water: 0 ... 0.6 MPa, 0 ... 6 bar, 0 ... 87 psi					
		Steam: 0 ... 0.15 MPa, 0 ... 1.5 bar, 0 ... 22 psi					
Operating medium		Compressed air to ISO 8573-1:2010 [7:–:–]					
		Water (liquid, ice-free)[1]					
		Steam [1]					
Note on temperature of medium		Steam: max. 120 °C					
Ambient temperature	[°C]	–20 ... +150					
Food-safe		See supplementary material information[1]					
		See declaration of conformity[1]					
Material fire test		UL94 V-0					

1) More information www.festo.com/catalogue/pfan ➔ Support/Downloads.

Operating pressure p as a function of temperature t

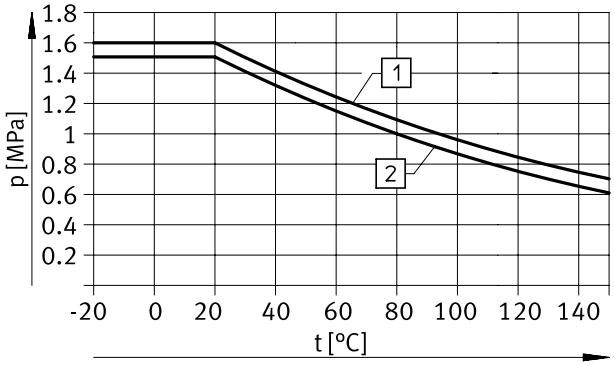

[1] PFAN-6/10/12
[2] PFAN-3/4/8

Datasheet

Materials

Shore hardness	D 60 +5
Tubing	PFA
Note on materials	RoHS-compliant
LABS (PWIS) conformity	VDMA24364-B2-L
Application information	Tubing without printing

Dimensions and ordering data

O.D. [mm]	I.D. [mm]	Min. bending radius [mm]	Flow-relevant bending radius [mm]	Weight [kg/m]	Colour	Part no.	Type	PU[1] [m]
3	2.3	10	30	0.0075	Natural	**8061167**	**PFAN-3x0.5-NT**	**50**
4	2.9	11	37	0.012		**197061**	**PFAN-4x0.75-NT**	**50**
6	4	12	50	0.034		**197062**	**PFAN-6x1-NT**	**50**
8	5.9	25	110	0.049		**197063**	**PFAN-8x1.25-NT**	**50**
10	7	22	140	0.087		**197064**	**PFAN-10x1.5-NT**	**50**
12	8.4	29	165	0.125		**197065**	**PFAN-12x1.75-NT**	**50**

1) Packaging unit

Type codes

001	Series	
PTFEN	Plastic tubing, polytetrafluorethylene, standard O.D.	

002	Pipe/tubing O.D. x wall thickness	
4x0,5	4x0.5 mm	
6x1	6x1 mm	
8x1	8x1 mm	
10x1,5	10x1.5 mm	
12x2	12x2 mm	
14x2	14x2 mm	
16x2,5	16x2.5 mm	

003	Colour	
NT	Natural	

004	Packaging unit [m]	
	Standard	
25	1 m ... 25 m	
100	100 m	
300	300 m	
400	400 m	
500	500 m	

Datasheet

Plastic tubing PTFEN

Pneumatic tubing with resistance to high temperatures and chemicals.

Material: Polytetrafluoroethylene

Operating and environmental conditions

Type		PTFEN-4	PTFEN-6	PTFEN-8	PTFEN-10	PTFEN-12	PTFEN-14	PTFEN-16
O.D.	[mm]	4	6	8	10	12	14	16
Pneumatic connection								
For push-in connector	[mm]	4	6	8	10	12	14	16
For barbed connector	[mm]	3	4	6	–	–	–	–
For barbed connector with union nut	[mm]	3	4	6	–	–	–	–
Temperature-dependent operating pressure	[MPa]	–0.095 ... +1.2 ➔ graph	–0.095 ... +1.5 ➔ graph	–0.95 ... +1.2 ➔ graph				
	[bar]	–0.95 ... +12	–0.95 ... +15	–0.95 ... +12				
	[psi]	–13.775 ... +174	–13.775... +217.5	–13.775 ... +174				
Operating pressure for full temperature range	[MPa]	–0.095 ... +0.5						
	[bar]	–0.95 ... +5						
	[psi]	–13.775 ... +72.5						
Operating medium		Compressed air to ISO 8573-1:2010 [7:–:–]						
Ambient temperature	[°C]	–20 ... +150						
Food-safe[1)]		See supplementary material information						
Material fire test		UL94 V-0						

1) More information: www.festo.com/catalogue/ptfen ➔ Support/Downloads.

Operating pressure p as a function of temperature t

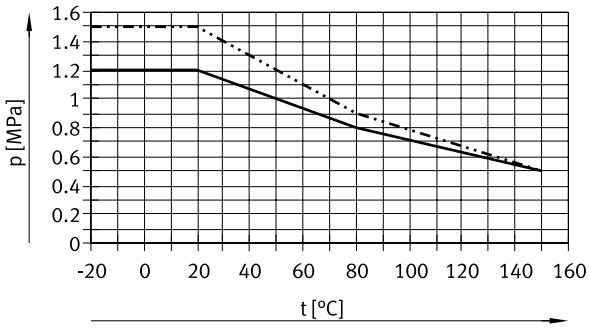

PTFEN-4/8/10/12/14/16
PTFEN-6

Materials

Shore hardness	D 55 ±5
Tubing	PTFE
Note on materials	RoHS-compliant
LABS (PWIS) conformity	VDMA24364-B1/B2-L
Application information	Tubing without printing

Datasheet

Ordering data

O.D. [mm]	I.D. [mm]	Min. bending radius [mm]	Flow-relevant bending radius [mm]	Weight [kg/m]	Colour	Part no.	Type	PU[1] [m]
4	2.9	32	32	0.013	Natural	**8061171**	**PTFEN-4X0.5-NT-100**	**100**
6	4	38	40	0.034		**8061172**	**PTFEN-6X1-NT-100**	**100**
						8061178	**PTFEN-6X1-NT-500**	**500**
8	5.9	64	90	0.047		**8061173**	**PTFEN-8X1-NT**	**50**
						8061179	**PTFEN-8X1-NT-400**	**400**
10	7	70	100	0.086		**8061174**	**PTFEN-10X1.5-NT**	**50**
						8061180	**PTFEN-10X1.5-NT-300**	**300**
12	8.4	84	120	0.124		**8061175**	**PTFEN-12X2-NT**	**50**
14	10	106	120	0.162		**8061176**	**PTFEN-14X2-NT**	**50**
16	11	109	160	0.228		**8061177**	**PTFEN-16X2.5-NT-25**	**25**

1) Packaging unit

Note

Do not bend tubing!
It is crucial that during assembly and operation the tubing is not bent or excessively constricted when using cable binders.

This could damage the tubing and cause it to split at the bend after a short while under normal operating conditions.

Type codes

001	Series	
PEN	Plastic tubing	

002	Pipe/tubing O.D. x wall thickness	
4x0,75	4x0.75 mm	
6x1	6x1 mm	
8x1,25	8x1.25 mm	
10x1,5	10x1.5 mm	
12x1,75	12x1.75 mm	
14x2	14x2 mm	
16x2,5	16x2.5 mm	

003	Colour	
NT	Natural	
SW	Black	
BL	Blue	
SI	Silver	
RT	Red	
GN	Green	
GE	Yellow	

004	Packaging unit [m]	
	Standard	
100	100 m	
200	200 m	
300	300 m	
400	400 m	
500	500 m	

Datasheet

Plastic tubing PEN

Polyethylene tubing is characterised by good resistance to chemicals and hydrolysis. It is resistant to most cleaning agents and lubricants.

Material: Polyethylene

Operating and environmental conditions

Type		PEN-4	PEN-6	PEN-8	PEN-10	PEN-12	PEN-14	PEN-16
O.D.	[mm]	4	6	8	10	12	14	16
Pneumatic connection								
For push-in connector	[mm]	4	6	8	10	12	14	16
For barbed connector	[mm]	3	4	6	–	–	–	–
For barbed connector with union nut	[mm]	3	4	6	–	–	–	–
Temperature-dependent operating pressure	[MPa]	–0.095 ... +1 ➔ graph						
	[bar]	–0.95 ... +10						
	[psi]	–13,775 ... +145						
Operating medium		Compressed air to ISO 8573-1:2010 [7:–:–]						
		Water as per manufacturer's declaration[1)]						
Ambient temperature	[°C]	–30 ... +60						
Certification		German Technical Control Board (TÜV)						
Certificate-issuing authority		B 013277 0506 00						
Tubing characteristics		Suitable for energy chains						

1) More information: www.festo.com/catalogue/pen ➔ Support/Downloads.

Operating pressure p as a function of temperature t

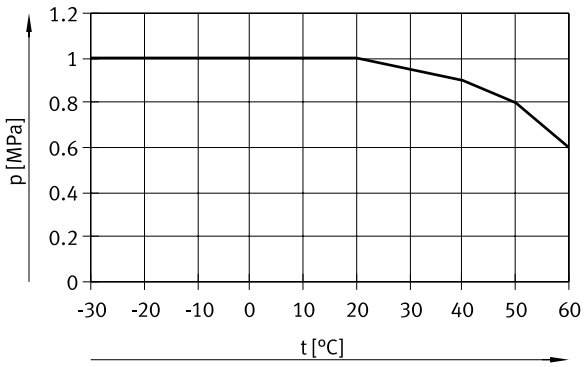

Materials

Shore hardness	D 52 ±3
Tubing	PE
Note on materials	RoHS-compliant
LABS (PWIS) conformity	VDMA24364-B2-L

Datasheet

Dimensions – Reel

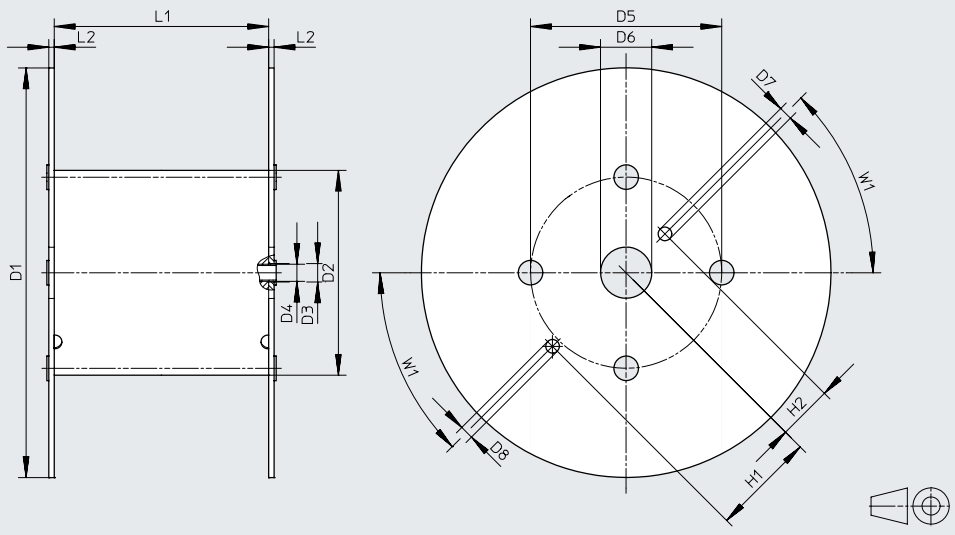

Type	D1 ⌀	D2 ⌀	D3 ⌀	D4 ⌀	D5 ⌀	D6 ⌀	D7 ⌀	D8 ⌀	H1	H2	L1	L2	W1
For PEN-4x0.75-...-500	545	246	21	20	216	75	20	20	152.5	80.5	128	8	45°
For PEN-6x1-...-500	545	246	21	20	216	75	20	20	152.5	80.5	128	8	45°
For PEN-8x1.25-...-400	545	310	21	20	280	75	20	20	152.5	80.5	254	8	45°
For PEN-10x1.5-...-300	600	310	21	20	280	75	20	20	152.5	80.5	254	8	45°
For PEN-12x1.75-...-200	600	310	21	20	280	75	20	20	152.5	80.5	254	8	45°
For PEN-16x2.5-...-100	545	310	21	20	280	75	20	20	152.5	80.5	254	8	45°

Dimensions and ordering data

O.D. [mm]	I.D. [mm]	Min. bending radius [mm]	Flow-relevant bending radius [mm]	Weight [kg/m]	Colour	Part no.	Type	PU[1] [m]
4	2.7	10	20	0.0064	Black	**543240**	**PEN-4x0.75-SW**	**50**
					Black	**551438**	**PEN-4x0.75-SW-500**	**500**
					Blue	**551456**	**PEN-4x0.75-BL**	**50**
					Blue	**551444**	**PEN-4x0.75-BL-500**	**500**
					Silver	**551462**	**PEN-4x0.75-SI**	**50**
					Silver	**551450**	**PEN-4x0.75-SI-500**	**500**
					Natural	**543246**	**PEN-4x0.75-NT**	**50**
					Green	**551468**	**PEN-4x0.75-GN**	**50**
					Red	**551474**	**PEN-4x0.75-RT**	**50**
					Yellow	**551480**	**PEN-4x0.75-GE**	**50**
6	4	13.5	26	0.0148	Black	**543241**	**PEN-6x1-SW**	**50**
					Black	**551439**	**PEN-6x1-SW-500**	**500**
					Blue	**551457**	**PEN-6x1-BL**	**50**
					Blue	**551445**	**PEN-6x1-BL-500**	**500**
					Silver	**551463**	**PEN-6x1-SI**	**50**
					Silver	**551451**	**PEN-6x1-SI-500**	**500**
					Natural	**543247**	**PEN-6x1-NT**	**50**
					Green	**551469**	**PEN-6x1-GN**	**50**
					Red	**551475**	**PEN-6x1-RT**	**50**
					Yellow	**551481**	**PEN-6x1-GE**	**50**

1) Packaging unit

Datasheet

Dimensions and ordering data

O.D. [mm]	I.D. [mm]	Min. bending radius [mm]	Flow-relevant bending radius [mm]	Weight [kg/m]	Colour	Part no.	Type	PU[1] [m]
8	5.7	22.5	35	0.0233	Black	**543242**	**PEN-8x1.25-SW**	**50**
					Black	**551440**	**PEN-8x1.25-SW-400**	**400**
					Blue	**551458**	**PEN-8x1.25-BL**	**50**
					Blue	**551446**	**PEN-8x1.25-BL-400**	**400**
					Silver	**551464**	**PEN-8x1.25-SI**	**50**
					Silver	**551452**	**PEN-8x1.25-SI-400**	**400**
					Natural	**543248**	**PEN-8x1.25-NT**	**50**
					Green	**551470**	**PEN-8x1.25-GN**	**50**
					Red	**551476**	**PEN-8x1.25-RT**	**50**
					Yellow	**551482**	**PEN-8x1.25-GE**	**50**
10	7	23.5	40	0.0377	Black	**543243**	**PEN-10x1.5-SW**	**50**
					Black	**551441**	**PEN-10x1.5-SW-300**	**300**
					Blue	**551459**	**PEN-10x1.5-BL**	**50**
					Blue	**551447**	**PEN-10x1.5-BL-300**	**300**
					Silver	**551465**	**PEN-10x1.5-SI**	**50**
					Silver	**551453**	**PEN-10x1.5-SI-300**	**300**
					Natural	**543249**	**PEN-10x1.5-NT**	**50**
					Green	**551471**	**PEN-10x1.5-GN**	**50**
					Red	**551477**	**PEN-10x1.5-RT**	**50**
					Yellow	**551483**	**PEN-10x1.5-GE**	**50**
12	8.4	33	58	0.0542	Black	**543244**	**PEN-12x1.75-SW**	**50**
					Black	**551442**	**PEN-12x1.75-SW-200**	**200**
					Blue	**551460**	**PEN-12x1.75-BL**	**50**
					Blue	**551448**	**PEN-12x1.75-BL-200**	**200**
					Silver	**551466**	**PEN-12x1.75-SI**	**50**
					Silver	**551454**	**PEN-12x1.75-SI-200**	**200**
					Natural	**543250**	**PEN-12x1.75-NT**	**50**
					Green	**551472**	**PEN-12x1.75-GN**	**50**
					Red	**551478**	**PEN-12x1.75-RT**	**50**
					Yellow	**551484**	**PEN-12x1.75-GE**	**50**
14	9.5	45	80	0.0773	Black	**570516**	**PEN-14x2-SW**	**50**
					Natural	**570517**	**PEN-14x2-NT**	**50**
16	10.8	57.5	122	0.1029	Black	**543245**	**PEN-16x2.5-SW**	**50**
					Black	**551443**	**PEN-16x2.5-SW-100**	**100**
					Blue	**551461**	**PEN-16x2.5-BL**	**50**
					Blue	**551449**	**PEN-16x2.5-BL-100**	**100**
					Silver	**551467**	**PEN-16x2.5-SI**	**50**
					Silver	**551455**	**PEN-16x2.5-SI-100**	**100**
					Natural	**543251**	**PEN-16x2.5-NT**	**50**
					Green	**551473**	**PEN-16x2.5-GN**	**50**
					Red	**551479**	**PEN-16x2.5-RT**	**50**
					Yellow	**551485**	**PEN-16x2.5-GE**	**50**

1) Packaging unit

Ordering data – Modular product system

Ordering table (minimum order quantity 3000 m, rounded value 25 m)

Size	4	6	8	10	12	14	16	Conditions	Code	Enter code
Module no.	**553769**									
Function	Polyethylene tubing, standard O.D., economical								**PEN**	PEN
Tubing O.D. [mm]	4	–	–	–	–	–	–		**-4**	
	–	6	–	–	–	–	–		**-6**	
	–	–	8	–	–	–	–		**-8**	
	–	–	–	10	–	–	–		**-10**	
	–	–	–	–	12	–	–		**-12**	
	–	–	–	–	–	14	–		**-14**	
	–	–	–	–	–	–	16		**-16**	
Colour	Silver								**-SI**	
	Blue								**-BL**	
	Black								**-SW**	
	Yellow								**-GE**	
	Green								**-GN**	
	Red								**-RT**	
	Brown								**-BR**	
	White								**-WS**	
	Natural								**-NT**	
Labelling text (on request)	Standard									
	Customer-specific tubing inscription							[1]	**-TXT**	
Packaging unit [m]	25								**-25**	
	50								**-50**	
	100								**-100**	
	200					–	–		**-200**	
	300				–	–	–		**-300**	
	400			–	–	–	–		**-400**	
	500		–	–	–	–	–		**-500**	
Packaging	Cardboard box							[2]	**-CB**	
	Reel							[3]	**-HA**	

[1] TXT Only on request
[2] CB Only with packaging unit 25, 50
[3] HA Not with packaging unit 25, 50

Type codes

001	Series	
PLN	Plastic tubing, polyethylene, standard O.D.	

002	Pipe/tubing O.D. x wall thickness	
4x0,75	4x0.75 mm	
6x1	6x1 mm	
8x1,25	8x1.25 mm	
10x1,5	10x1.5 mm	
12x1,75	12x1.75 mm	
14x2	14x2 mm	
16x2	16x2 mm	

003	Colour	
NT	Natural	
SW	Black	
BL	Blue	
SI	Silver	
RT	Red	

Datasheet

Plastic tubing PLN

Polyethylene tubing is characterised by good resistance to chemicals and hydrolysis. It is resistant to most cleaning agents and lubricants.

Material: Polyethylene

Operating and environmental conditions

Type		PLN-4	PLN-6	PLN-8	PLN-10	PLN-12	PLN-14	PLN-16
O.D.	[mm]	4	6	8	10	12	14	16
Pneumatic connection								
For push-in connector	[mm]	4	6	8	10	12	14	16
For barbed connector	[mm]	3	4	6	–	–	–	–
For barbed connector with union nut	[mm]	3	4	6	–	–	–	–
Temperature-dependent operating pressure	[MPa]	–0.095 ... +1.4 ➔ graph						
	[bar]	–0.95 ... +14						
	[psi]	–13,775 ... +203						
Operating medium		Compressed air to ISO 8573-1:2010 [7:–:–]						
		Water as per manufacturer's declaration[1]						
Ambient temperature	[°C]	–30 ... +80						
Food-safe[1]		See supplementary material information						
Certification		German Technical Control Board (TÜV)						
Certificate-issuing authority		B 013277 0506 00						

1) More information: www.festo.com/catalogue/pln ➔ Support/Downloads.

Operating pressure p as a function of temperature t

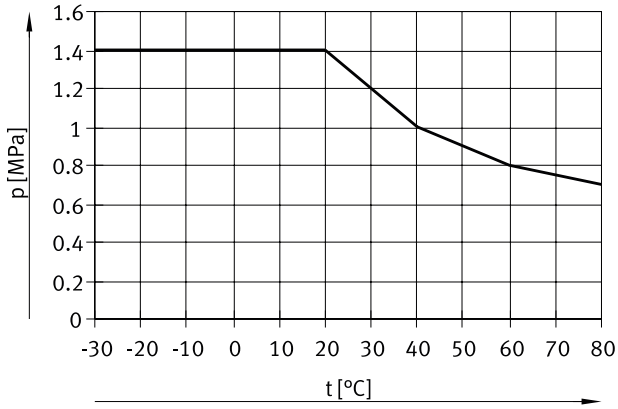

Materials

Shore hardness	D 59 ±3
Tubing	PE
Note on materials	RoHS-compliant
LABS (PWIS) conformity	VDMA24364-B2-L

Datasheet

Dimensions and ordering data

O.D. [mm]	I.D. [mm]	Min. bending radius [mm]	Flow-relevant bending radius [mm]	Weight [kg/m]	Colour	Part no.	Type	PU[1] [m]
4	2.9	12	25	0.0056	Natural	**193403**	**PLN-4x0.75-NT**	**50**
					Black	**195280**	**PLN-4x0.75-SW**	**50**
					Blue	**558205**	**PLN-4x0.75-BL**	**50**
					Silver	**558211**	**PLN-4x0.75-SI**	**50**
					Red	**558217**	**PLN-4x0.75-RT**	**50**
6	4	11	32	0.0147	Natural	**193404**	**PLN-6x1-NT**	**50**
					Black	**195281**	**PLN-6x1-SW**	**50**
					Blue	**558206**	**PLN-6x1-BL**	**50**
					Silver	**558212**	**PLN-6x1-SI**	**50**
					Red	**558218**	**PLN-6x1-RT**	**50**
8	5.9	23	50	0.0214	Natural	**193405**	**PLN-8x1.25-NT**	**50**
					Black	**195282**	**PLN-8x1.25-SW**	**50**
					Blue	**558207**	**PLN-8x1.25-BL**	**50**
					Silver	**558213**	**PLN-8x1.25-SI**	**50**
					Red	**558219**	**PLN-8x1.25-RT**	**50**
10	7	22	57	0.0375	Natural	**193406**	**PLN-10x1.5-NT**	**50**
					Black	**195283**	**PLN-10x1.5-SW**	**50**
					Blue	**558208**	**PLN-10x1.5-BL**	**50**
					Silver	**558214**	**PLN-10x1.5-SI**	**50**
					Red	**558220**	**PLN-10x1.5-RT**	**50**
12	8.4	23	65	0.054	Natural	**193407**	**PLN-12x1.75-NT**	**50**
					Black	**195284**	**PLN-12x1.75-SW**	**50**
					Blue	**558209**	**PLN-12x1.75-BL**	**50**
					Silver	**558215**	**PLN-12x1.75-SI**	**50**
					Red	**558221**	**PLN-12x1.75-RT**	**50**
14	10	40	80	0.07	Natural	**570424**	**PLN-14x2-NT**	**50**
					Black	**570423**	**PLN-14x2-SW**	**50**
16	12	55	95	0.082	Natural	**539064**	**PLN-16x2-NT**	**50**
					Black	**539065**	**PLN-16x2-SW**	**50**
					Blue	**558210**	**PLN-16x2-BL**	**50**
					Silver	**558216**	**PLN-16x2-SI**	**50**
					Red	**558222**	**PLN-16x2-RT**	**50**

1) Packaging unit

Ordering data – Modular product system

Ordering table (minimum order quantity 3000 m, rounded value 25 m)

Size	4	6	8	10	12	14	16	Conditions	Code	Enter code
Module no.	**553850**									
Function	Polyethylene tubing, standard O.D., resistant to cleaning agents								**PLN**	PLN
Tubing O.D. [mm]	4	–	–	–	–	–	–		**-4**	
	–	6	–	–	–	–	–		**-6**	
	–	–	8	–	–	–	–		**-8**	
	–	–	–	10	–	–	–		**-10**	
	–	–	–	–	12	–	–		**-12**	
	–	–	–	–	–	14	–		**-14**	
	–	–	–	–	–	–	16		**-16**	
Colour	Silver								**-SI**	
	Blue								**-BL**	
	Black								**-SW**	
	Yellow								**-GE**	
	Green								**-GN**	
	Red								**-RT**	
	Brown								**-BR**	
	White								**-WS**	
	Natural								**-NT**	
Labelling text (on request)	Standard									
	Customer-specific tubing inscription							[1]	**-TXT**	
Packaging unit [m]	25								**-25**	
	50								**-50**	
	100								**-100**	
	200					–	–		**-200**	
	300				–	–	–		**-300**	
	400			–	–	–	–		**-400**	
	500		–	–	–	–	–		**-500**	
Packaging	Cardboard box							[2]	**-CB**	
	Reel							[3]	**-HA**	

[1] TXT Only on request
[2] CB Only with packaging unit 25, 50
[3] HA Not with packaging unit 25, 50