Solenoid valves VUVG/valve manifold assembly VTUG-S

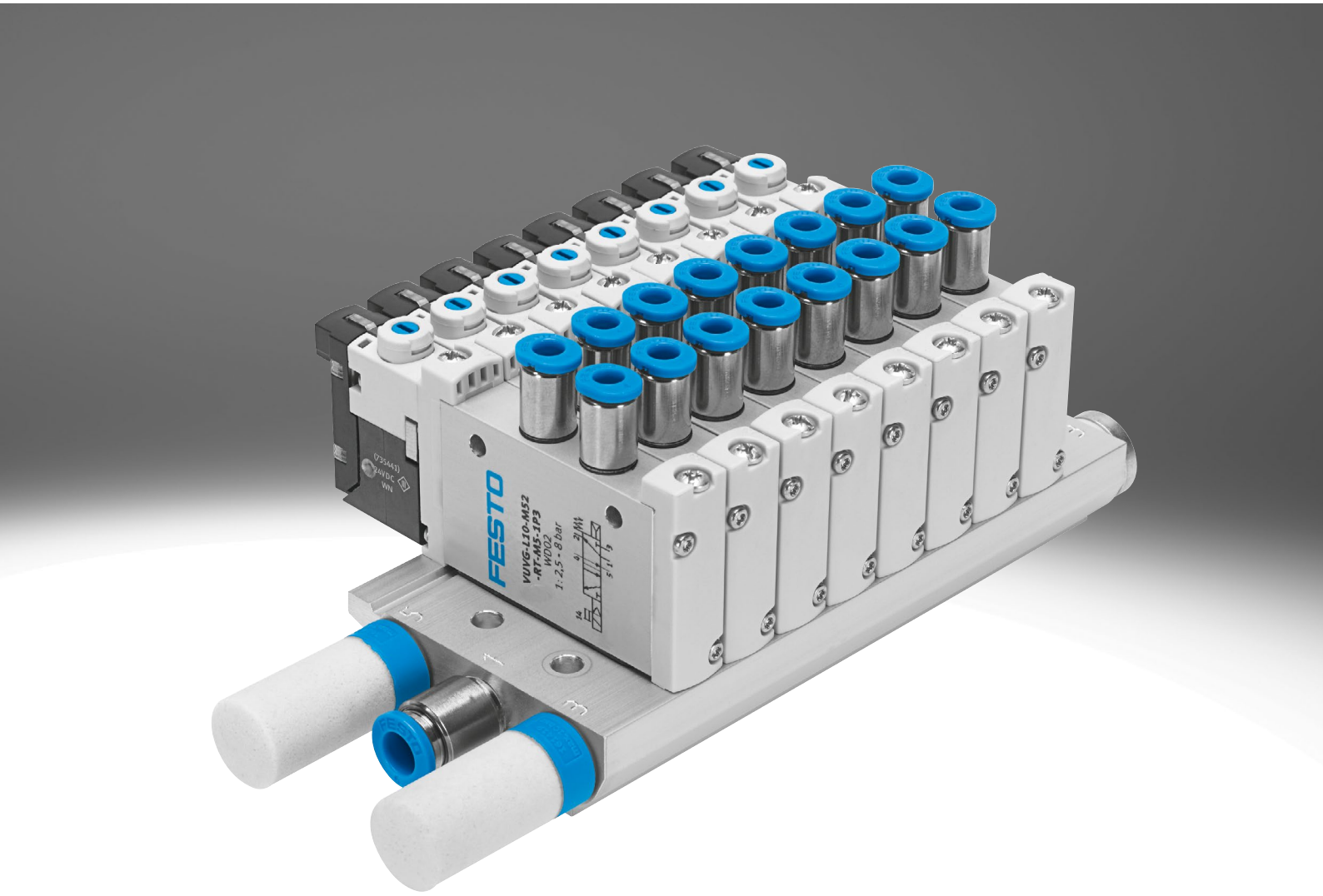

Key features

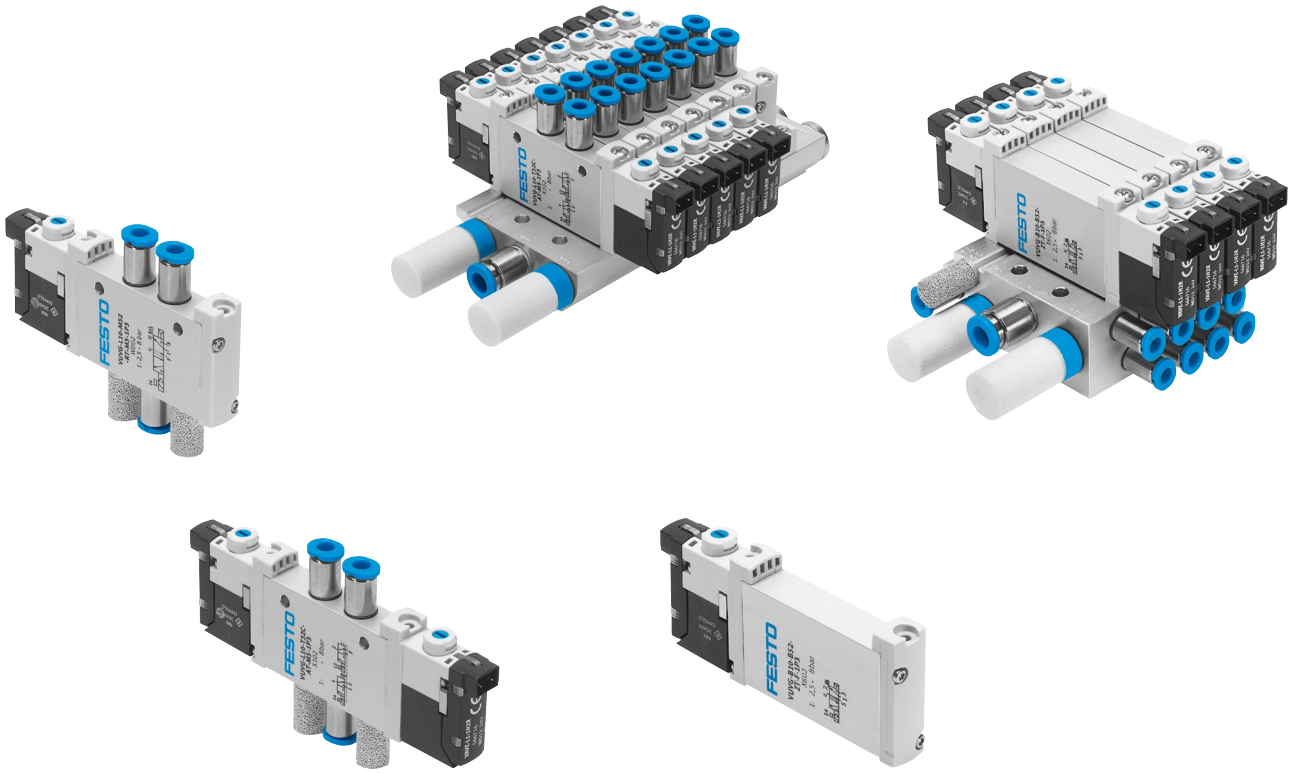

Innovative

- Can be set to internal or external pilot air supply for manifold assemblies with sub-base valves
- Maximum pressure 10 bar
- Design principle:
  - Piston spool with sealing ring (VUVG-LK, VUVG-BK)
  - Piston spool with sealing cartridge (VUVG-L, VUVG-B)

Versatile

- Wide range of valve functions
- Choice of quick push-in connectors
- In-line valves
- Semi in-line valves for manifold assembly
- M5 and M7 in-line valves can be combined on one manifold rail
- Valve manifold with pressure zones
- IP40, IP65
- Connection technology via:
  - E-box
  - Pneumatic interface CNOMO, to ISO 15218

Reliable

- Sturdy and durable metal components
  - Valves
  - Manifold rails
- Fast troubleshooting thanks to 360° LED indicator
- Reliable servicing thanks to valves that can be replaced quickly and easily
- Choice of manual override: non-detenting, covered, non-detenting/detenting or detenting (without accessories)

Easy to install

- Solid wall mounting or DIN rail mounting
- Easy mounting, captive screws and seal
- Connection technology easy to change via the E-box
- Inscription label holder for labelling the valves

Ordering data – Product options

Configurable product
This product and all its product options can be ordered using the configurator.

The configurator can be found at
➔ **www.festo.com/catalogue/...**
Enter the part number or the type.

Part no.	Type
572230	VTUG-S
564212	VUVG

Key features – Pneumatic components

Individual valves and valve manifold assemblies

In-line valves as individual valve

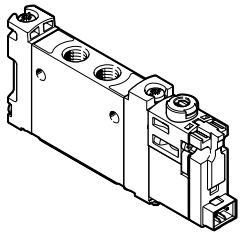

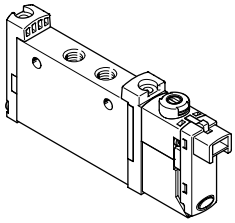

In-line valve VUVG-LK/VUVG-L

In-line valves are designed to be used without being linked pneumatically. All pneumatic connections are on the valve and can be equipped with fittings/tubing. The electrical connection is established via different E-boxes.

If a special seal set is used, in-line valves VUVG can also be mounted on a manifold rail (pneumatic linking) as semi in-line valves.

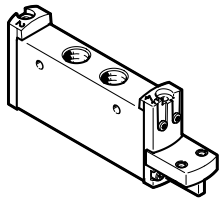

In-line valve VUVG-L to ISO 15218 (CNOMO)

The in-line valve VTUG-L-...-P1 to ISO 15218 is a solenoid valve without electrical pilot control.
The basic valve with the CNOMO pneumatic interface to ISO 15218 can be equipped with pilot controls with the following electrical connection:

- Connection type C (DIN EN175301-803)
- Connection type C to industry standard
- M12 connection (IEC 61076-2-101)

Semi in-line valves for manifold assembly

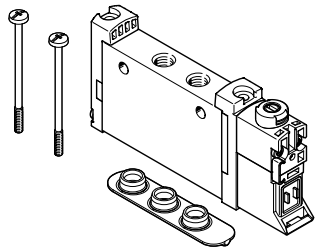

Semi in-line valve VUVG-S

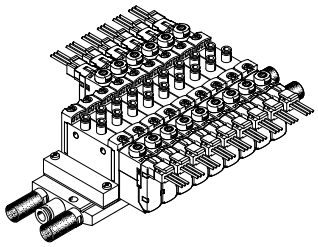

Valve manifold assembly VTUG comprising
semi in-line valves VUVG-S

In the case of semi in-line valves, the supply ports (1, 3 and 5) are connected to the valve via pneumatic links (e.g. sub-base).

The working ports (2, 4) are on the valve. The electrical connection is established via different E-boxes.

Sub-base valves for manifold assembly

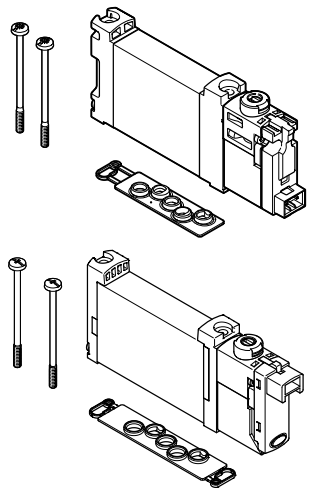

Sub-base valve
VUVG-BK/VUVG-B

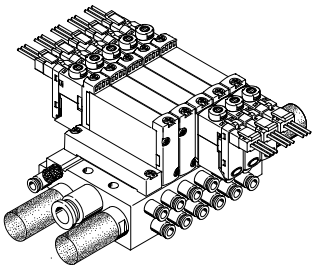

Valve manifold assembly VTUG comprising
sub-base valves VUVG-BK/VUVG-B

The supply ports (1, 3 and 5) and the working ports (2, 4) of sub-base valves are connected through the sub-base or the

manifold. The electrical connection is established via different E-boxes.

Key features – Pneumatic components

Basic valves VUVG

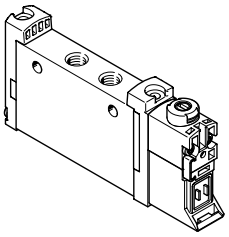

- Size 10, 14 and 18 mm
- In-line valves and semi in-line valves
- Sub-base valves
- 2x 3/2-way, 5/2-way and 5/3-way valves

E-boxes

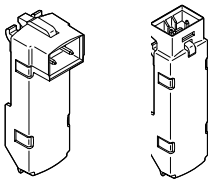

- 5, 12 and 24 V DC
- With or without holding current reduction
- LED

Combinations of basic valve and E-boxes

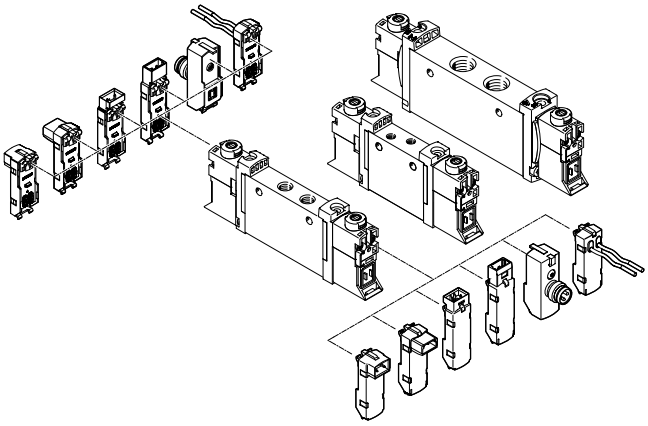

Note

More E-boxes a page 115

Cover caps for manual override

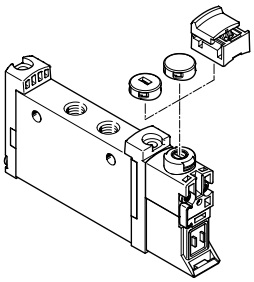

- Closed cover cap, covered manual override
- Slotted cover cap, non-detenting manual override
- Cover, detenting manual override

Inscription label holder

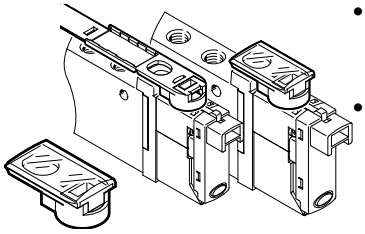

- The inscription label holder is mounted in the same way as a cover cap for manual override
- The inscription label holder folds over to cover the retaining screw and the manual override

Key features – Pneumatic components

Manifold rail for in-line valves

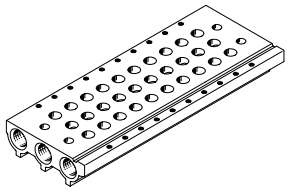

- For in-line valves M3, M5, M7, G1/8 and G1/4
- For 2x 3/2-way, 5/2-way and 5/3-way valves
- 2 to 10 and 12, 14, 16 valve positions

Note

Pressurisation and exhaust on both sides is recommended for an optimised flow rate in cases where multiple valves switch simultaneously.

Manifold rail for sub-base valves

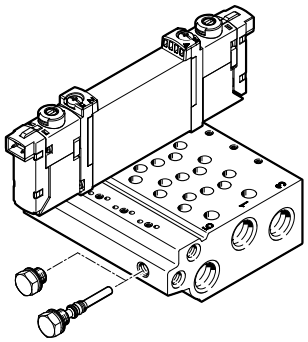

- For sub-base valves 10A, 10, 14 and 18
- Manifold rail with M5, M7, G1/8 and G1/4 working ports
- For 2x 3/2-way, 5/2-way and 5/3-way valves
- 2 to 10, 12, 14 and 16 valve positions
- The sub-base valves are always supplied with external pilot air. The pilot air is set via the manifold rail. A short and a long blanking plug are therefore included in the scope of delivery of the manifold rail.

Cover plate for vacant position

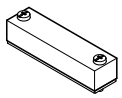

Vacant position cover

Supply plate

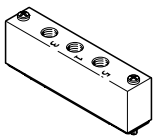

For additional air supply and exhaust via a valve position

Separator for pressure zones



For creating multiple pressure zones in a valve manifold assembly

Key features – Pneumatic components

Vertical pressure supply plate

For in-line valves M5/M7 and G1/8

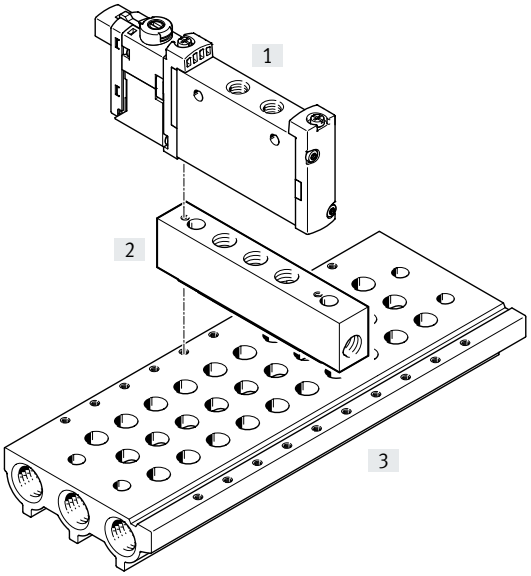

[1] In-line valves VUVG
[2] Vertical pressure supply plate
[3] Manifold rail

The vertical pressure supply plate allows the valve mounted on it to be pressurised and exhausted separately.
If two vertical pressure supply plates are mounted on top of each other, the valve can be supplied with compressed air and exhausted completely independently of the valve terminal (terminal code CS).

Code		Type	For in-line valves		Description
			M5/M7	G1/8	
ZU	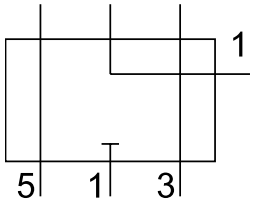	VABF-L1-P3A	■	■	Plate with port 1 for supplying an individual operating pressure or separate exhausting (reverse operation) for a valve position.
ZV	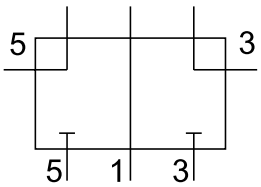	VABF-L1-P7A	■	■	Plate with ports 3 and 5 for exhausting the valve or supplying an individual operating pressure (reverse operation) for a valve position.

Key features – Pneumatic components

Exhaust functions

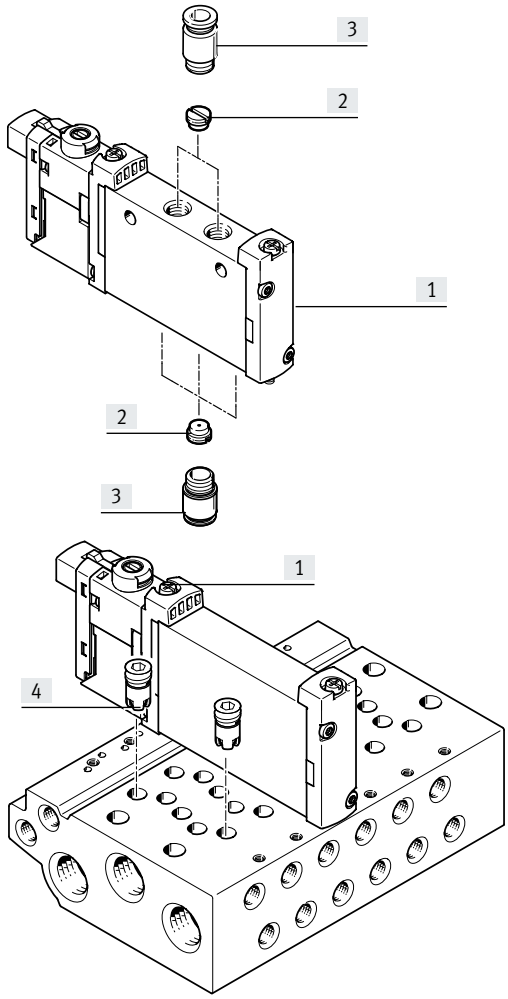

[1] Valves VUVG with individual electrical connection
[2] Flow restrictor for thread M5
[3] Fitting
[4] Fixed flow restrictor, self-tapping/check valve

Flow restrictor for thread M5

In-line valve, individual electrical connection: flow restrictor can be fitted in port 1, 3, 5 and/or in port 2, 4.

Sub-base valve, individual electrical connection: flow restrictor can be fitted in port 2, 4.

Fixed flow restrictor, self-tapping

The fixed flow restrictor can be used to permanently set the exhaust flow rate in ducts 3 and 5.

The fixed flow restrictors are screwed into ducts 3 and 5 in the manifold rail.

Please see the relevant assembly instructions:
www.festo.com/catalogue/... a Support/Downloads

Check valve

Check valves block the flow towards the valves, thus preventing actuators from switching unexpectedly if back pressure develops in ducts 3 and 5 in the case of a high exhaust capacity. The check valves are screwed into ducts 3 and 5 in the manifold rail.

Please see the relevant assembly instructions:
www.festo.com/catalogue/... a Support/Downloads

Note

- It is not possible to use a check valve and a fixed flow restrictor (in the same duct) at the same time.
- When screwing in again, use the threads already present.

Key features – Pneumatic components

Creating pressure zones and separating exhaust air

Compressed air is supplied and exhausted via the manifold rail and via supply plates.
The position of the supply plates and channel separations can be freely selected with the VUVG.

Pressure zones are created by isolating the internal supply ducts between the manifold sub-bases by appropriate duct separation.

Pressure zone separation can be used for the following ducts:
- Duct 1
- Duct 3
- Duct 5

Note
- Use a separator if the exhaust air pressures are high
- Use at least one supply plate/air supply for each pressure zone
- Pressure zone separation is not possible in duct 12/14 (pilot air supply)

Duct separation

	Description
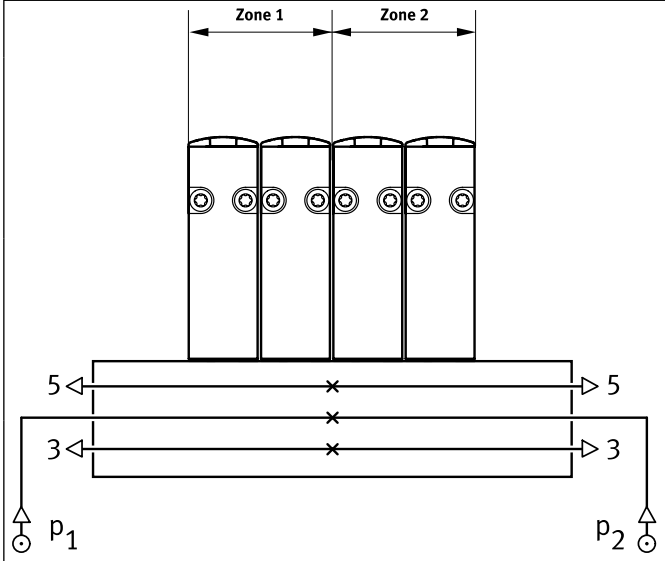	The pressure zones can be freely configured with the VUVG. The following duct separations are possible: Duct 1 closed 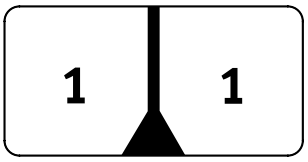 Duct 1, 3, 5 closed 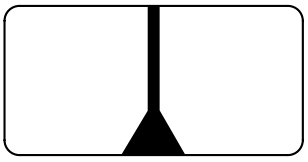 Duct 3, 5 closed 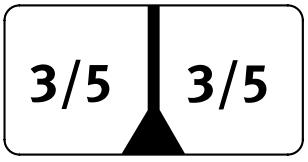
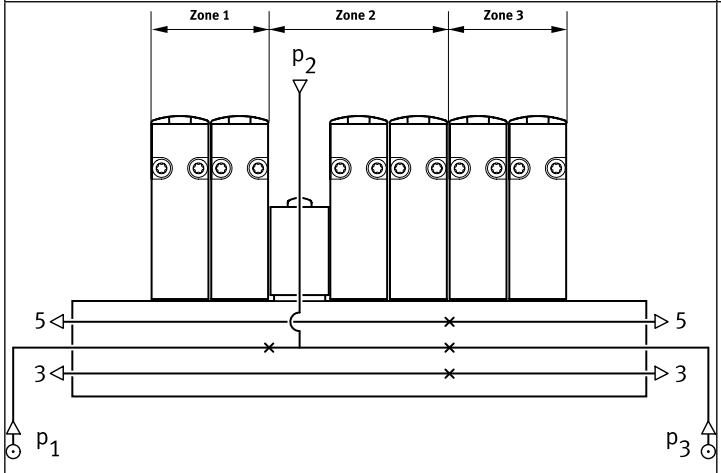	The number of pressure zones with the VUVG is only limited by the number of valve positions on the manifold rail. Note that each supply plate occupies one valve position.

Separator VABD

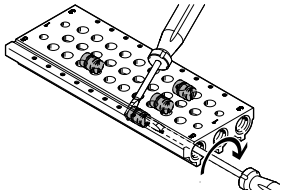

Note

As the separators are only fitted from one side using a slotted screwdriver, several pressure zones can be created in one profile.

Key features – Pneumatic components

Pilot air supply

Internal pilot air supply

Internal pilot air supply can be chosen with an operating pressure between 0.15 ... 0.8 MPa, 0.25 ... 0.8 MPa, or 0.3 ... 0.8 MPa (depending on the valve used).

The pilot air supply is branched from duct 1 (compressed air supply) using an internal connection.

External pilot air supply

External pilot air supply is required for vacuum operation.
The port for external pilot air supply (port 12/14) is located on the valve in the case of in-line valves and on the manifold rail in the case of sub-base valves.

Pilot exhaust air

With in-line valves, the pilot exhaust air escapes via exhaust holes.
With sub-base valves, the pilot exhaust air is discharged via duct 82/84 of the manifold rail.

Pilot air supply for in-line and semi in-line valves

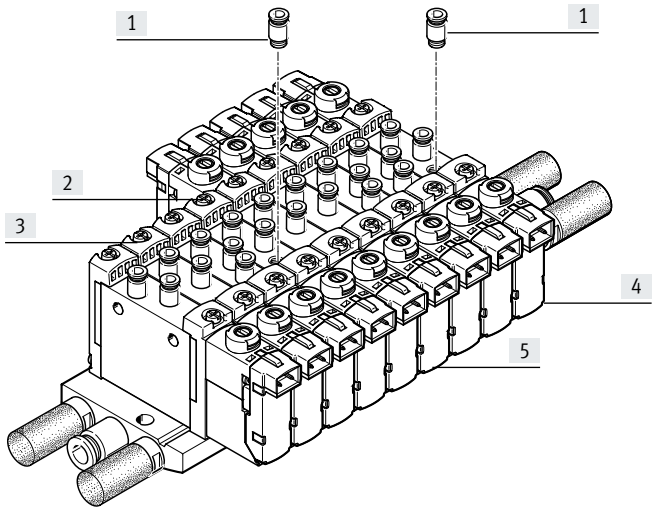

[1] Push-in fitting for external pilot air supply at port 12/14
[2] Single solenoid valve with external pilot air supply
[3] Single solenoid valve with internal pilot air supply
[4] Double solenoid valve with external pilot air supply
[5] Double solenoid valve with internal pilot air supply

The internal pilot air is branched from port 1 in the valve body. The external pilot air (port 12/14) is supplied individually at each valve housing.

Note

Semi in-line valves cannot be supplied centrally with pilot air via the manifold rail.

Pilot air supply with sub-base valves

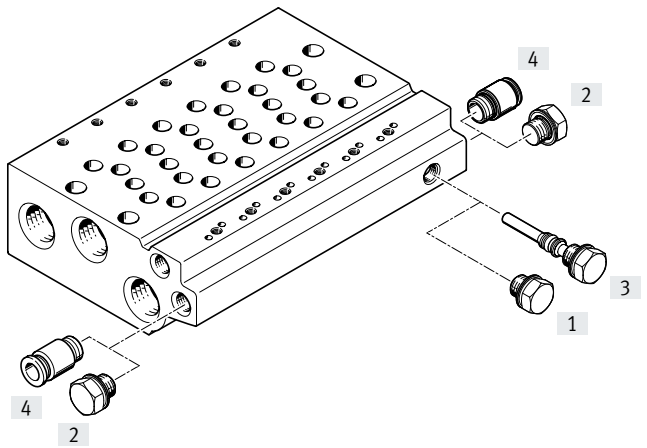

[1] Blanking plug, short, for internal pilot air
[2] Blanking plug for duct 12/14 with internal pilot air
[3] Blanking plug, long, for external pilot air
[4] Push-in fitting in duct 12/14 with external pilot air

The manifold rails for sub-base valves have an internal connection between duct 12/14 and duct 1.
By inserting a blanking plug into this connection, it is possible to switch between internal and external pilot air.

Key features – Pneumatic components

Operation with different pressures

Vacuum operation

Points to note with 3/2-way valves
The 3/2-way valves are available in a design with two valves in one valve body and with pneumatic spring return. With these valves, the force for the return movement is obtained from port 1.

Vacuum operation is therefore only possible at port 3 and 5, not at port 1.

With external pilot air supply, vacuum can be connected at port 1, 3, 5 of the 5/2-way and 5/3-way valves.

Reverse operation

The 3/2-way valves with pneumatic spring are not suitable for reverse operation, since at least the minimum pilot pressure must be available at duct 1.

Note
Pressure must be available at port 1.

Pressure divider (internal pilot air)

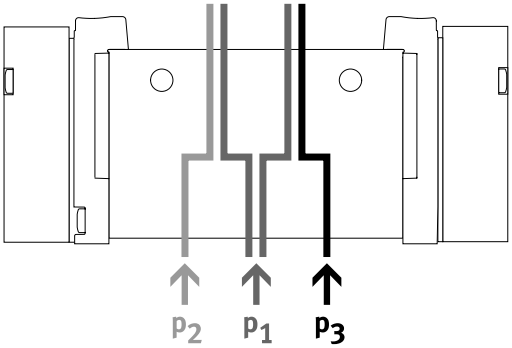

- If two different pressures are required.
- Different pressures can be supplied at duct 1, 3 and 5.

Note
- With internal pilot air supply, the minimum pilot pressure must be adhered to in duct 1
- With 2x 3/2-way valves without spring return, the minimum pilot pressure must always be adhered to in duct 1

Advantages

Either pressure or vacuum can be connected at ducts 3 and 5 both with external and internal pilot air.

Vacuum, ejector pulse and normal position

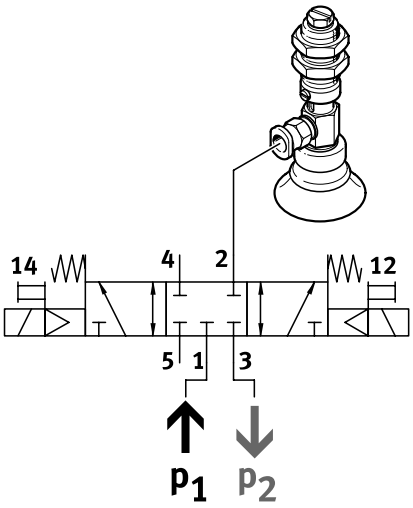

Vacuum, ejector pulse and normal position can be achieved as follows:

- Internal pilot air supply
- Vacuum in duct 3
- Pressure for the ejector pulse in duct 1

Key features – Mounting

Mounting – Individual valve VUVG

Cylinder mounting

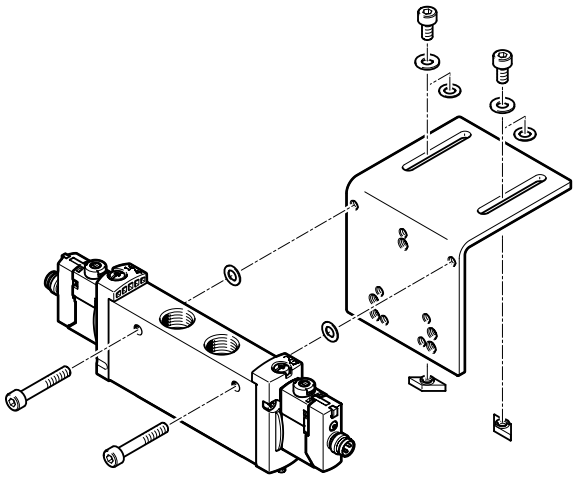

For mounting individual valves directly on a drive.
The solenoid valves are provided with two through-holes for attaching to the cylinder mounting DAVM-MW-V1...-V.
Mounting is only possible on the side on which the pneumatic connections are located.

The relevant screw set is included when the cylinder mounting DAVM-MW-V1...-V is ordered.

Product range overview

Design	Working port	Size	Functions and flow rate [l/min]												→ Page/Internet
			T32C	T32U	T32H	T32C/M	T32U/M	T32H/M	M52	M52/M	B52	P53C	P53U	P53E	
In-line valve as individual valve, solenoid valve VUVG-LK															
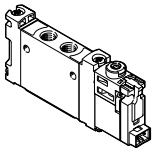	M5	10	■ 180	–	–	–	–	–	■ 195	–	■ 195	–	–	–	32
	M7	10	■ 280	–	–	–	–	–	■ 340	–	■ 340	–	–	–	36
	G1/8	14	■ 570	–	–	–	–	–	■ 660	–	■ 660	–	–	–	55
In-line valve as individual valve, solenoid valve VUVG-L															
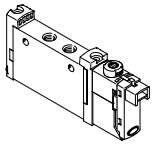 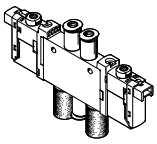	M3	10A	–	–	–	–	–	–	■ 100	■ 80	■ 100	■ 90	■ 90	■ 90	26
	M5	10	■ 150	■ 150	■ 150	■ 135	■ 125	■ 125	■ 220	■ 190	■ 220	■ 210	■ 210	■ 210	40
	M7	10	■ 190	■ 190	■ 190	■ 150	■ 140	■ 140	■ 330	■ 220	■ 380	■ 320	■ 320	■ 320	46
	G1/8	14	■ 560	■ 600	■ 590	■ 550	■ 500	■ 500	■ 780	■ 780	■ 780	■ 650	■ 560	■ 560	59
	G1/4	18	■ 880	■ 970	■ 950	■ 870	■ 990	■ 920	■ 1300	■ 1300	■ 1380	■ 1200	■ 1000	■ 910	71
Semi in-line valve for manifold assembly, solenoid valve VUVG-S															
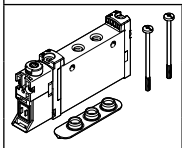	M5	10	■ 150	■ 150	■ 150	■ 135	■ 125	■ 125	■ 220	■ 190	■ 220	■ 210	■ 210	■ 210	40
	M7	10	■ 190	■ 190	■ 190	■ 150	■ 140	■ 140	■ 330	■ 220	■ 380	■ 320	■ 320	■ 320	46
	G1/8	14	■ 560	■ 600	■ 590	■ 550	■ 500	■ 500	■ 780	■ 780	■ 780	■ 650	■ 560	■ 560	59
	G1/4	18	■ 880	■ 970	■ 950	■ 870	■ 990	■ 920	■ 1300	■ 1300	■ 1380	■ 1200	■ 1000	■ 910	71

Design	Working port	Size	Functions and flow rate [l/min]												→ Page/Internet
			T32C	T32U	T32H	T32C/M	T32U/M	T32H/M	M52	M52/M	B52	P53C	P53U	P53E	
Sub-base valve, solenoid valve VUVG-BK															
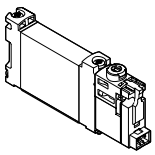	M5	10	■ 160	–	–	–	–	–	■ 160	–	■ 160	–	–	–	86
	M7	10	■ 160	–	–	–	–	–	■ 160	–	■ 160	–	–	–	86
	G1/8	14	■ 350	–	–	–	–	–	■ 380	–	■ 380	–	–	–	95
Sub-base valve, solenoid valve VUVG-B															
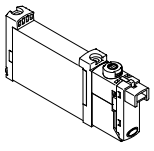	M3	10A	–	–	–	–	–	–	■ 100	■ 80	■ 100	■ 90	■ 90	■ 90	81
	M5	10	■ 150	■ 150	■ 150	■ 130	■ 120	■ 120	■ 210	■ 180	■ 210	■ 200	■ 200	■ 200	89
	M7	10	■ 160	■ 160	■ 160	■ 140	■ 130	■ 130	■ 270	■ 230	■ 270	■ 250	■ 250	■ 250	89
	G1/8	14	■ 510	■ 510	■ 510	■ 430	■ 410	■ 410	■ 520	■ 570	■ 570	■ 520	■ 500	■ 460	95
	G1/4	18	■ 800	■ 800	■ 800	■ 800	■ 800	■ 800	■ 1000	■ 1000	■ 1000	■ 950	■ 950	■ 950	105

Product range overview

Design	Size	Description	→ Page/Internet
Manifold rail VABM- ... -S- ... , for in-line valves (manifold assembly)			
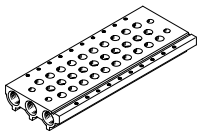	10AS	Size M3	31, 53, 69, 79
	10S	Size M5, M7	
	14S	Size G1/8	
	18S	Size G1/4	
Manifold rail VABM, for sub-base valves (manifold assembly)			
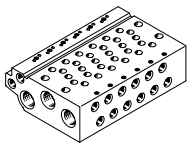	10AW	Size M3	85, 94, 104, 111
	10W	Size M5	
	10HW	Size M7	
	14W	Size G1/8	
	18W	Size G1/4	

Overview of valve functions

Valve	Valve code	Description	VUVG-LK, VUVG-BK		VUVG-L, VUVG-B			
			Size		Size			
			M5/M7	G1/8	M3	M5/M7	G1/8	G1/4
2x 3/2-way valve, normally closed, pneumatic spring								
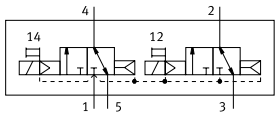	T32C-A	In-line valve, pilot air supply Internal	■	■	–	■	■	■
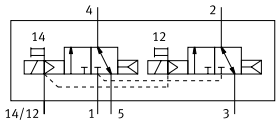		In-line valve, pilot air supply External	–	–	–	■	■	–
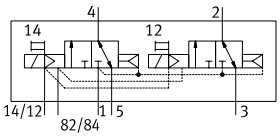		Sub-base valve, external pilot air supply	–	–	–	■	■	■
2x 3/2-way valve, normally open, pneumatic spring								
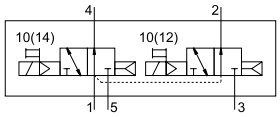	T32U-A	In-line valve, pilot air supply Internal	–	–	–	■	■	■
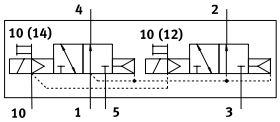		In-line valve, pilot air supply External	–	–	–	■	■	–
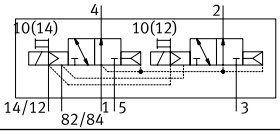		Sub-base valve, external pilot air supply	–	–	–	■	■	■
2x 3/2-way valve, 1x normally open, 1x normally closed, pneumatic spring								
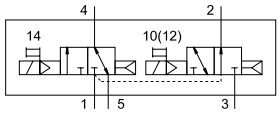	T32H-A	In-line valve, pilot air supply Internal	–	–	–	■	■	■
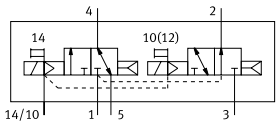		In-line valve, pilot air supply External	–	–	–	■	■	–
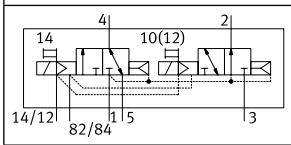		Sub-base valve, external pilot air supply	–	–	–	■	■	■

Overview of valve functions

Valve	Valve code	Description	VUVG-LK, VUVG-BK		VUVG-L, VUVG-B			
			Size		Size			
			M5/M7	G1/8	M3	M5/M7	G1/8	G1/4
2x 3/2-way valve, normally closed, mechanical spring								
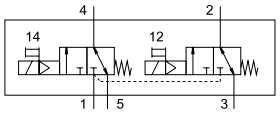	T32C-M	In-line valve, pilot air supply Internal	–	–	–	■	■	■
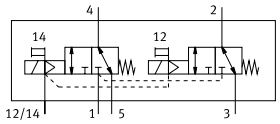		In-line valve, pilot air supply External	–	–	–	■	■	■
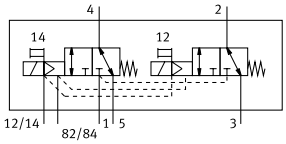		Sub-base valve, external pilot air supply	–	–	–	■	■	■
2x 3/2-way valve, normally open, mechanical spring								
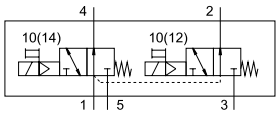	T32U-M	In-line valve, pilot air supply Internal	–	–	–	■	■	■
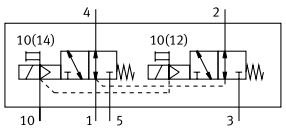		In-line valve, pilot air supply External	–	–	–	■	■	■
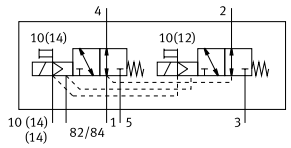		Sub-base valve, external pilot air supply	–	–	–	■	■	■
2x 3/2-way valve, 1x normally open, 1x normally closed, mechanical spring								
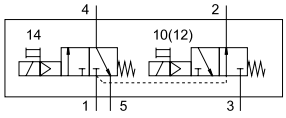	T32H-M	In-line valve, pilot air supply Internal	–	–	–	■	■	■
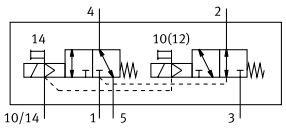		In-line valve, pilot air supply External	–	–	–	■	■	■
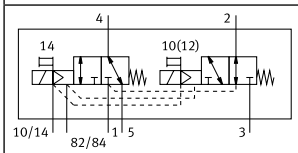		Sub-base valve, external pilot air supply	–	–	–	■	■	■

Overview of valve functions

Valve	Valve code	Description	VUVG-LK, VUVG-BK		VUVG-L, VUVG-B			
			Size		Size			
			M5/M7	G1/8	M3	M5/M7	G1/8	G1/4
5/2-way valve, double solenoid								
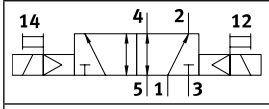	B52	In-line valve, pilot air supply Internal	■	■	■	■	■	■
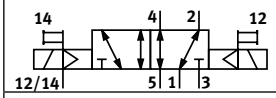		In-line valve, pilot air supply External	–	–	■	■	■	■
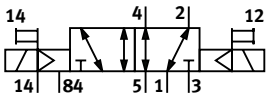		Sub-base valve, external pilot air supply	–	–	■	■	■	■
5/2-way valve, single solenoid, pneumatic spring								
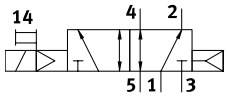	M52-A	In-line valve, pilot air supply Internal	■	■	–	–	■	–
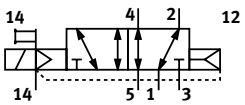		In-line valve, pilot air supply External	–	–	–	–	■	–
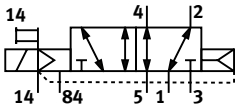		Sub-base valve, external pilot air supply	–	–	–	–	■	–
5/2-way valve, single solenoid, mechanical spring								
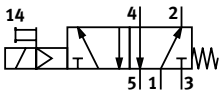	M52-M	In-line valve, pilot air supply Internal	–	–	■	■	■	■
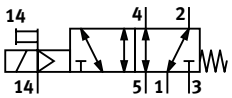		In-line valve, pilot air supply External	–	–	■	■	■	■
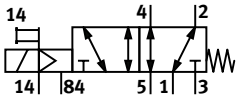		Sub-base valve, external pilot air supply	–	–	■	■	■	■
5/2-way valve, single solenoid, pneumatic/mechanical spring								
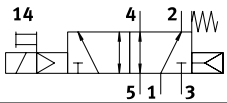	M52-R	In-line valve, pilot air supply Internal	–	–	■	■	–	■
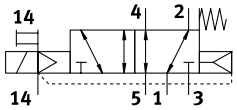		In-line valve, pilot air supply External	–	–	■	■	–	■
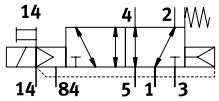		Sub-base valve, external pilot air supply	–	–	■	■	–	■

Overview of valve functions

Valve	Valve code	Description	VUVG-LK, VUVG-BK		VUVG-L, VUVG-B			
			Size		Size			
			M5/M7	G1/8	M3	M5/M7	G1/8	G1/4
5/3-way valve, mid-position closed								
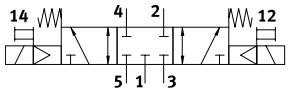	P53C	In-line valve, pilot air supply Internal	–	–	■	■	■	■
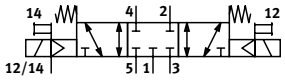		In-line valve, pilot air supply External	–	–	■	■	■	■
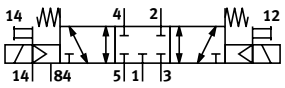		Sub-base valve, external pilot air supply	–	–	■	■	■	■
5/3-way valve, mid-position pressurised								
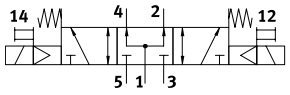	P53U	In-line valve, pilot air supply Internal	–	–	■	■	■	■
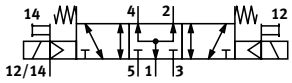		In-line valve, pilot air supply External	–	–	■	■	■	■
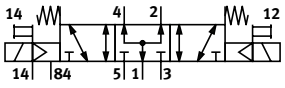		Sub-base valve, external pilot air supply	–	–	■	■	■	■
5/3-way valve, mid-position exhausted								
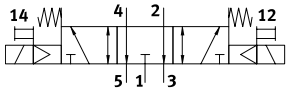	P53E	In-line valve, pilot air supply Internal	–	–	■	■	■	■
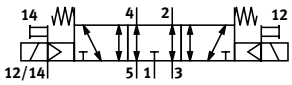		In-line valve, pilot air supply External	–	–	■	■	■	■
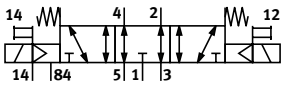		Sub-base valve, external pilot air supply	–	–	■	■	■	■

Peripherals overview example – In-line valves

Manifold assembly

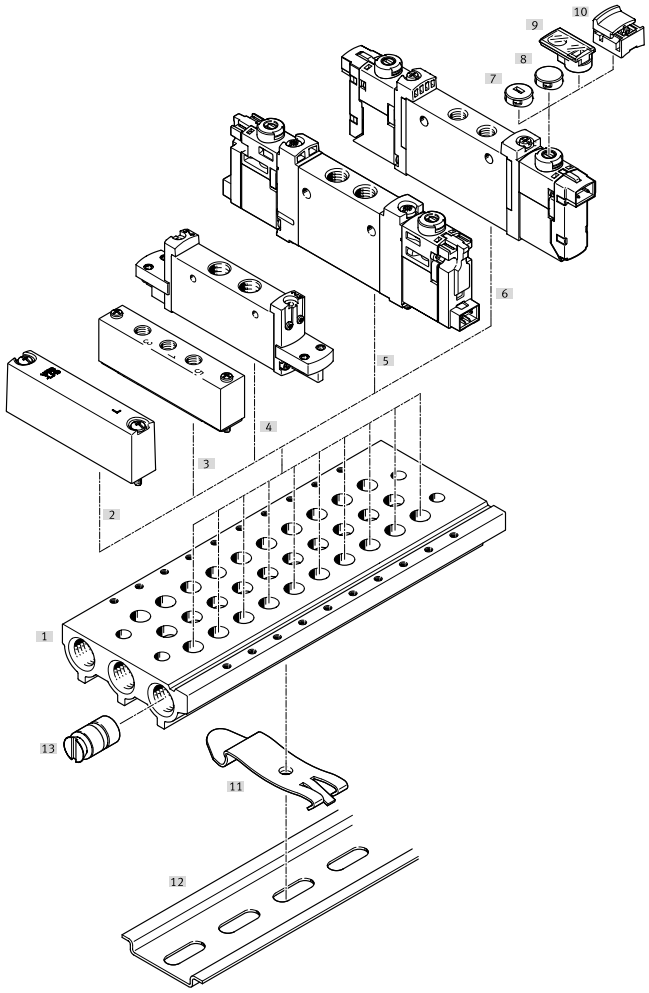

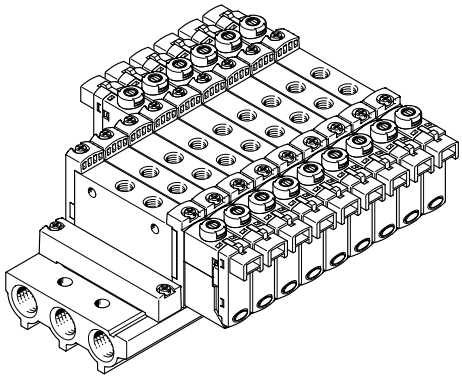

Manifold assembly and accessories

		Type	Description	→ Page/Internet
[1]	Manifold rail	VABM-L1-...	For 2 to 10, 12, 14 and 16 valve positions	93
[2]	Cover plate	VABB-L1-...	For covering a vacant position	31
[3]	Supply plate	VABF-L1-...	For air supply at duct 1 and duct 3 and 5	31
[4]	Solenoid valve	VUVG-...-P1	In-line valve 2x 3/2-, 5/2- and 5/3-way	67
[5]	Solenoid valve	VUVG-LK...	In-line valve 2x 3/2-, 5/2- and 5/3-way	32
[6]	Solenoid valve	VUVG-L...	In-line valve 2x 3/2-, 5/2- and 5/3-way	32
[7]	Cover cap (non-detenting)	VMPA-HB...-B	For manual override	121
[8]	Cover cap (concealed)	VMPA-HB...-B	For manual override	121
[9]	Inscription label holder	ASLR-D	For labelling the valves, covering the retaining screw and the manual override	121
[10]	Cover cap (detenting)	VAMC-L1-...	For manual override	121
[11]	DIN rail mounting	VAME-T-M4	2 pieces for attaching the valve manifold to the DIN rail	121
[12]	DIN rail	NRH-35-2000	For mounting the valve manifold assembly	121
[13]	Separator	VABD-...	For creating pressure zones	31

Peripherals overview example – In-line valves

Manifold assembly

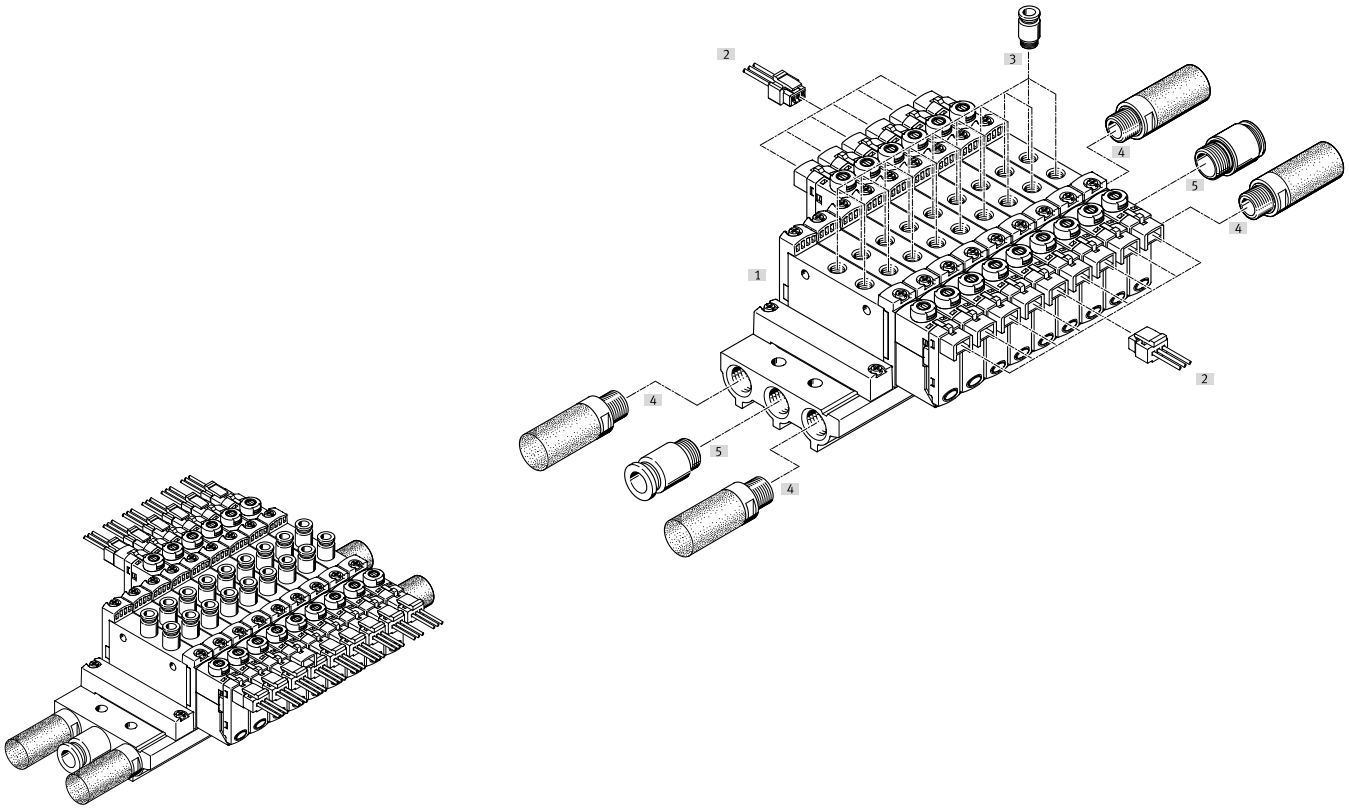

Manifold assembly and accessories

		Type	Description	→ Page/Internet
[1]	Manifold rail	VABM-L1-...	For 2 to 10, 12, 14 and 16 valve positions	93
[2]	Plug socket with cable	NEBV-H1G2-...-LE2	For E-box H2 and H3	119
[3]	Push-in fitting	QS...	Push-in fitting for duct 2 and 4	120
[4]	Silencer	U...	For duct 3 and 5	121
[5]	Push-in fitting	QS...	Push-in fitting for air supply at duct 1	120

Peripherals overview example – Sub-base valves

Manifold assembly

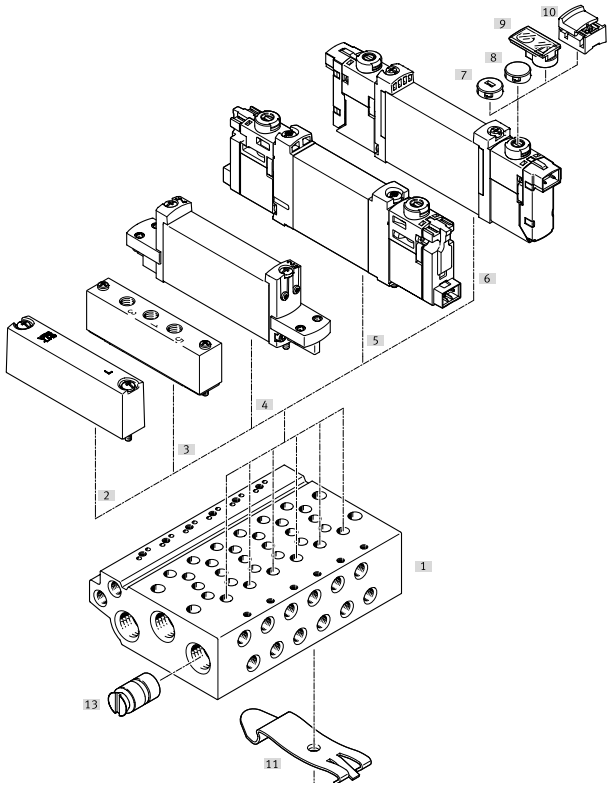

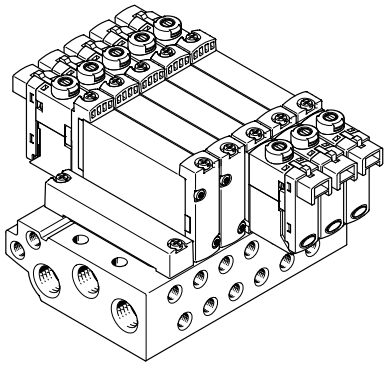

Manifold assembly and accessories

		Type	Description	→ Page/Internet
[1]	Manifold rail	VABM-L1-...	For 2 to 10, 12, 14 and 16 valve positions	93
[2]	Cover plate	VABB-L1-...	For covering a vacant position	94
[3]	Supply plate	VABF-L1-...	For air supply at duct 1 and duct 3 and 5	94
[4]	Solenoid valve	VUVG-...-P1	Sub-base valve 2x 3/2-way, 5/2-way and 5/3-way	102
[5]	Solenoid valve	VUVG-BK...	Sub-base valve 2x 3/2-way, 5/2-way and 5/3-way	86
[6]	Solenoid valve	VUVG-B...	Sub-base valve 2x 3/2-way, 5/2-way and 5/3-way	86
[7]	Cover cap (non-detenting)	VMPA-HB...-B	For manual override	121
[8]	Cover cap (concealed)	VMPA-HB...-B	For manual override	121
[9]	Inscription label holder	ASLR-D	For labelling the valves, covering the retaining screw and the manual override	121
[10]	Cover cap (detenting)	VAMC-L1-...	For manual override	121
[11]	DIN rail mounting	VAME-T-M4	2 pieces for attaching the valve manifold to the DIN rail	121
[12]	DIN rail	NRH-35-2000	For mounting the valve manifold assembly	121
[13]	Separator	VABD- ...	For creating pressure zones	94

Peripherals overview example – Sub-base valves

Manifold assembly

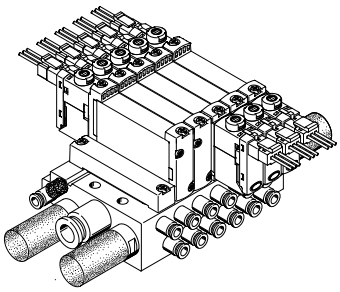

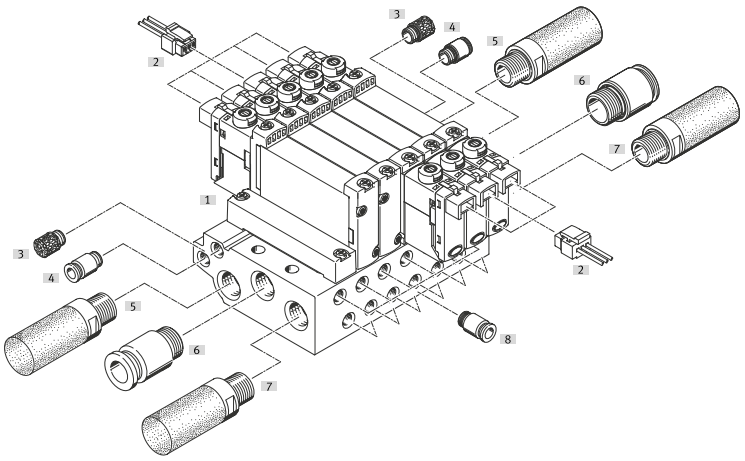

Manifold assembly and accessories

		Type	Description	→ Page/Internet
[1]	Manifold rail	VABM-L1-...	For 2 to 10, 12, 14 and 16 valve positions	93
[2]	Plug socket with cable	NEBV-H1G2-KN-...-LE2	For E-box H2 and H3	119
[3]	Silencer	U...	Silencer for pilot air exhaust at duct 82/84	121
[4]	Push-in fitting	QS...	Push-in fitting for pilot air supply at duct 12/14	120
[5]	Silencer	U...	For duct 3 and 5	121
[6]	Push-in fitting	QS...	Push-in fitting for air supply at duct 1	120
[7]	Silencer	U...	For duct 3 and 5	121
[8]	Push-in fitting	QS...	Push-in fitting for duct 2 and 4	120

Type codes

001	Series	
VUVG	Solenoid valve	

002	Directional control valve type	
L	In-line valve	
S	Semi-inline valve	
B	Sub-base valve	

003	Design principle	
	Piston spool	
K	Piston spool with sealing ring	

004	Size	
10A	Size 10, deviating flow	
10	Size 10	
14	Size 14	
18	Size 18	

005	Valve function	
T32U	2x3/2-way valve, normally open	
T32C	2x3/2-way valve, normally closed	
T32H	2x3/2-way valve, 1x normally closed, 1x normally open	
B52	5/2-way valve, double solenoid/bistable	
M52	5/2-way valve, single solenoid/monostable	
P53U	5/3-way valve, mid-position pressurised	
P53E	5/3-way valve, mid-position exhausted	
P53C	5/3-way valve, mid-position closed	

006	Reset method for monostable/single solenoid valves	
	None	
A	Pneumatic spring	
M	Mechanical spring	
R	Mixed, pneumatic/mechanical spring	

007	Pilot air	
	Internal	
Z	External	

008	Manual override	
	None	
H	Non-detenting	
S	Covered	
Y	Detenting	
T	Non-detenting, detenting with accessories	

009	Pneumatic connection	
M3	M3	
G18	G1/8	
G14	G1/4	
M5	M5	
M7	M7	
Q4H	Push-in connector 4 mm, with connecting thread M7	
Q6H	Push-in connector 6 mm, with connecting thread M7	
Q3	Push-in connector 3 mm	
Q4	Push-in connector 4 mm	
Q6	Push-in connector 6 mm	
Q8	Push-in connector 8 mm	
Q10	Push-in connector 10 mm	
T18	Push-in connector 1/8"	
T532	Push-in connector 5/32"	
T316	Push-in connector 3/16"	
T316H	Push-in connector for 3/16", M7	
T14	Push-in connector 1/4"	
T14H	Push-in connector for 1/4", M7	
T38	Push-in connector 3/8"	
T516	Push-in connector 5/16"	
T516H	Push-in connector 5/16", M7	
F	Flange/sub-base	

010	Exhaust	
QN	With fitting	
	No fitting	
U	Silencer	

011	Nominal operating voltage	
	None	
1	24 V DC	
1A	24 V AC/50-60 Hz	
4	5 V DC	
5	12 V DC	

012	Electrical connection	
	None	
P3	Without electrical sub-base	
C1	Plug pattern type C, to EN 175301-803	
E1	Individual connection with plug base	
H2	Connection pattern H, horizontal plug	
H3	Connection pattern H, vertical plug	
S2	Connection pattern S, horizontal plug	
S3	Connection pattern S, vertical connector	
L1	Leads 0.5 m	
L2	Leads 1 m	
L3	Leads 2.5 m	
L4	Leads 5 m	
K6	Cable 0.5 m	
K7	Cable 1 m	
K8	Cable 2.5 m	
K9	Cable 5 m	
R8	Individual connector M8, 3-pin	
R1	Individual connector M8, 4-pin	
R3	Individual plug M12, to EN 61076-2-101	
P1	Interface for pilot valve (CNOMO small)	

013	Circuitry	
	None	
R	Holding current reduction with integrated protective circuit	

Type codes

014	Display	
	None	
L	LED	

015	Electrical valve accessories	
	None	
C1	Connecting cable, 0.5 m	
C2	Connecting cable 1 m	
C3	Connecting cable 2.5 m	
C4	Connecting cable, 5 m	
D	Connector socket type C	
D3	Connecting cable 2.5 m, with plug socket type C	
D4	Connecting cable 5 m, with plug socket type C	
D6		
D7		
D8		
DL3	Connecting cable 2.5 m, with plug socket type C, LED	
DL4	Connecting cable 5 m, with plug socket type C, LED	
DL5	Connecting cable 10 m, with plug socket type C, LED	
E		
E3	Connecting cable 2.5 m, straight plug socket M12	
E4	Connecting cable 5 m, straight plug socket M12	
E6	Connecting cable 2.5 m, angled plug socket M12	
E7	Connecting cable 5 m, angled plug socket M12	
EL		
N1	Connecting cable 2.5 m, straight plug socket M8, 3-pin	
N2	Connecting cable 5 m, straight plug socket M8, 3-pin	
N3	Connecting cable 2.5 m, angled plug socket M8, 3-pin	
N4	Connecting cable 5 m, angled plug socket M8, 3-pin	
N5	Connecting cable 2.5 m, straight plug socket M8, 4-pin	
N6	Connecting cable 5 m, straight plug socket M8, 4-pin	
N7	Connecting cable 2.5 m, angled plug socket M8, 4-pin	
N8	Connecting cable 5 m, angled plug socket M8, 4-pin	
S1	Connecting cable, 0.5 m, S-connector	
S2	Connecting cable 1 m, S-connector	
S3	Connecting cable 2.5 m, S-connector	
S4	Connecting cable, 5 m, S-plug	
W1	Connecting cable, flying leads, 0.5 m	
W2	Connecting cable, flying leads, 1 m	
W3	Connecting cable, flying leads, 2.5 m	
W4	Connecting cable, flying leads, 5 m	
WS1	Connecting cable, S-plug with flying leads, 0.5 m	
WS2	Connecting cable, S-plug with flying leads, 1 m	
WS3	Connecting cable, S-plug with flying leads, 2.5 m	
WS4	Connecting cable, S-plug with flying leads, 5 m	

016	Version	
	Expanded properties	
S	Focused properties	

017	Special material properties	
	None	
F1A	Recommended for production facilities for the manufacture of lithium-ion batteries	

Datasheet

Function
2x3/2-way, single solenoid, closed
2x3/2-way, single solenoid, open
2x3/2-way, single solenoid, open/closed
5/2-way, double solenoid
5/2-way, single solenoid
5/3-way, pressurised
5/3-way, exhausted
5/3-way, closed

- Size 10, 14, 18 mm

- Flow rate
380 ... 1380 l/min:
380 l/min at 10 mm
780 l/min at 14 mm
1380 l/min at 18 mm

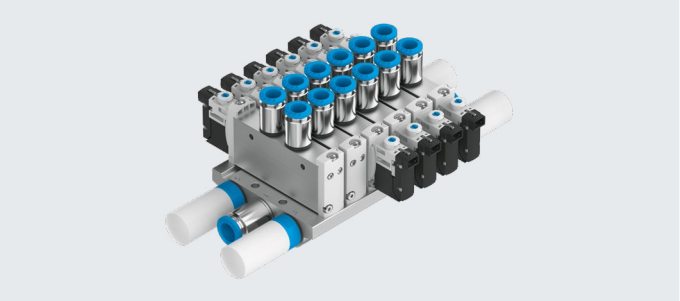

General technical data VTUG-S		
Valve function and stable positions		2x3/2-way, single solenoid, closed
		2x3/2-way, single solenoid, open
		2x3/2-way, single solenoid, open/closed
		5/2-way, double solenoid
		5/2-way, single solenoid
		5/3-way, pressurised
		5/3-way, exhausted
		5/3-way, closed
Valve terminal design		Fixed grid
Type of valve terminal		26
Electrical control		Individual connection
Electric I/O system		No
Max. number of valve positions		16
Max. number of pressure zones		9
Design		Piston spool
Sealing principle		Soft
Actuation type		Electrical
Pilot air supply		Internal or external
Exhaust air function		Can be throttled
Valve size	[mm]	10
		14
		18
Max. standard nominal flow rate	[l/min]	380 at 10 mm
		780 at 14 mm
		1380 at 18 mm

Datasheet

Operating and environmental conditions		
Operating medium		Compressed air to ISO 8573-1:2010 [7:4:4]
Pilot medium		Compressed air to ISO 8573-1:2010 [7:4:4]
Note on the operating/pilot medium		Lubricated operation possible (in which case lubricated operation will always be required)
Temperature of medium	[°C]	–5 ... 60
Ambient temperature	[°C]	–5 ... 60
Restricted ambient temperature and temperature of medium	[°C]	–5 ... 50
		Without holding current reduction
Operating pressure	[MPa]	–0.09 ... 1
	[bar]	–0.9 ... 10
Operating pressure for valve terminal with internal pilot air supply	[MPa]	0.15 ... 0.8
	[bar]	1.5 ... 8
Pilot pressure	[MPa]	0.15 ... 0.8
	[bar]	1.5 ... 8
Suitable for cleanrooms, measured according to ISO 14644-14		ISO class 5
Degree of protection		IP40
		IP65
Certification		RCM
		c UL us – Recognized (OL)
CE marking (see declaration of conformity) 1)		To EU EMC Directive
UKCA marking (see declaration of conformity)2)		To UK EMC regulations
Corrosion resistance class CRC3)		2

1) For information about the area of use, see the EC declaration of conformity at: www.festo.com/catalogue/... d Support/Downloads.
If the devices are subject to usage restrictions in residential, commercial or light-industrial environments, further measures for the reduction of the emitted interference may be necessary.
2) For information about the area of use, see the EC declaration of conformity at: www.festo.com/catalogue/... d Support/Downloads.
If the devices are subject to usage restrictions in residential, commercial or light-industrial environments, further measures for the reduction of the emitted interference may be necessary.
3) More information www.festo.com/x/topic/crc

Electrical data		
Permissible voltage fluctuations	[%]	± 10

Information on materials	
Information on materials: Seals	HNBR
	NBR
LABS (PWIS) conformity	VDMA24364-B2-L

Datasheet

Function
5/2-way, single solenoid
5/2-way, double solenoid valve
5/3C, 5/3U, 5/3E

Circuit diagrams a Page 14

- Size 10 mm
- Flow rate 80 ... 100 l/min
- Voltage 5, 12 and 24 V DC

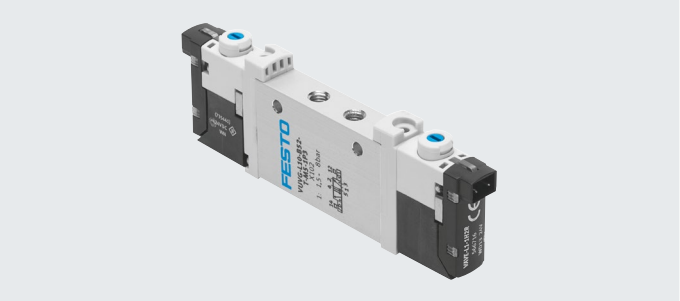

General technical data VUVG-L							
Valve function		M52-R	B52	M52-M	P53		
Normal position		–	–	–	C1)	U2)	E3)
Stable position		Monostable	Bistable	Monostable	Monostable		
Pneumatic spring return		Yes4)	–	No	–		
Mechanical spring return		Yes4)	–	Yes	Yes		
Vacuum operation at port 1		Only with external pilot air supply					
Design		Piston spool					
Sealing principle		Soft					
Actuation type		Electrical					
Type of control		Piloted					
Pilot air supply		Internal or external					
Exhaust air function		Can be throttled					
Manual override		Choice of non-detenting, covered, non-detenting/detenting or detenting					
Type of mounting		Optionally via through-holes5) or on manifold rail					
Mounting position		Any					
Nominal width	[mm]	2		1.4	2		
Standard nominal flow rate	[l/min]	100		80	90		
Flow rate on manifold rail	[l/min]	100		80	90		
Switching time on/off	[ms]	8/15	–	7/21	8/25		
Switching time changeover	[ms]	–	8	–	14		
Size	[mm]	10					
Connection 1, 2, 3, 4, 5, 12/14		M3					
Product weight	[g]	38	49	37			
Certification		c UL us – Recognized (OL)					
		RCM					
CE marking (see declaration of conformity)6)		To EU EMC Directive					
Corrosion resistance class CRC7)		2					

1) C=Normally closed/mid-position closed
2) U=Normally open/mid-position pressurised
3) E=Mid-position exhausted
4) Combined reset method
5) If several valves are to be screwed together via the through-holes to form a block, a minimum distance of 0.3 mm must be ensured by inserting spacers.
6) For information about the area of use, see the EC declaration of conformity at: www.festo.com/catalogue/... d Support/Downloads.
If the devices are subject to usage restrictions in residential, commercial or light-industrial environments, further measures for the reduction of the emitted interference may be necessary.
7) More information www.festo.com/x/topic/crc

Datasheet

Operating and environmental conditions						
Valve function			M52-R1)	B52	M52-M2)	P53
Operating medium			Compressed air to ISO 8573-2010 [7:4:4]			
Operating pressure	Internal	[MPa]	0.25 ... 0.8	0.15 ... 0.8	0.3 ... 0.8	0.3 ... 0.8
		[bar]	2.5 ... 8	1.5 ... 8	3 ... 8	3 ... 8
	External	[MPa]	–0.09 ... 1			–0.09 ... 0.8
		[bar]	–0.9 ... 10			–0.9 ... 8
Pilot pressure		[MPa]	0.25 ... 0.8	0.15 ... 0.8	0.3 ... 0.8	
		[bar]	2.5 ... 8	1.5 ... 8	3 ... 8	
Ambient temperature		[°C]	–5 ... +50, with holding current reduction –5 ... +60			
Temperature of medium		[°C]	–5 ... +50, with holding current reduction –5 ... +60			
Cleanroom class			ISO class 5			

1) Mixed, pneumatic/mechanical spring
2) Mechanical spring

Electrical data		
Electrical connection		Via E-box a page 113
Operating voltage	[V DC]	5, 12 and 24 ±10%
Power	[W]	1, reduced to 0.35 with holding current reduction
Duty cycle	[%]	100
Degree of protection to EN 60529		IP40 (with plug socket), IP65 (with M8)

Information on materials	
Housing	Wrought aluminium alloy
Seals	HNBR, NBR
Note on materials	RoHs-compliant
LABS (PWIS) conformity	VDMA24364-B1/B2-L

Datasheet

Dimensions Download CAD data ➔ www.festo.com

5/2- and 5/3-way valves

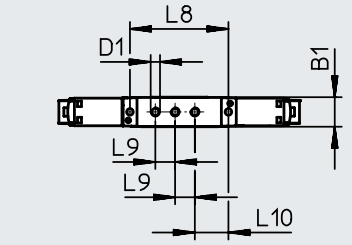

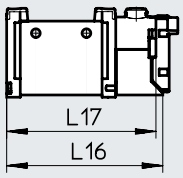

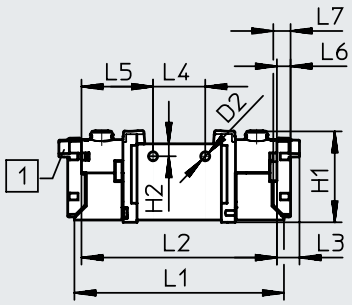

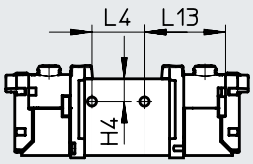

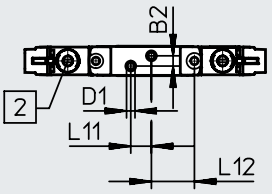

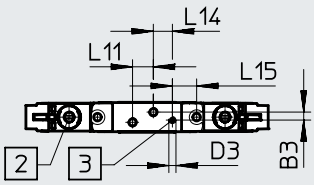

- **Note**

More dimensions for E-boxes
a page 115

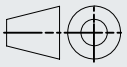

[1] Electrical connection for solenoid valve, horizontal

[2] Manual override

[3] Port for external pilot air supply

Type	B1	B2	B3	D1	D2	D3	H1	H2	L1	L2	L3	L4	L5
VUVG-L10A-...-M3...	10.2	3.6	2.83	M3	3.2	M3	32.5	4.4	74.3	69.3	8	18.5	25.4
VUVG-S10A-...-M3...													

Type	L6	L7	L8	L9	L10	L11	L12	L13	L14	L15	L16	L17
VUVG-L10A-...-M3...	4.85	6.15	34.9	7	11.9	7.3	15.25	28.5	6.7	8.54	57.06	54.56
VUVG-S10A-...-M3...												

Ordering data

Ordering data

	Description		Part no.	Type
In-line valve M3, without E-box				
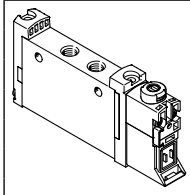	**5/2-way valve, single solenoid**			
	Internal pilot air supply	Pneumatic/mechanical spring return	**566437**	**VUVG-L10A-M52-RT-M3-1P3**
		Mechanical spring return	**574345**	**VUVG-L10A-M52-MT-M3-1P3**
	External pilot air supply	Pneumatic/mechanical spring return	**566443**	**VUVG-L10A-M52-RZT-M3-1P3**
		Mechanical spring return	**574346**	**VUVG-L10A-M52-MZT-M3-1P3**
	5/2-way valve, double solenoid			
	Internal pilot air supply		**566438**	**VUVG-L10A-B52-T-M3-1P3**
	External pilot air supply		**566444**	**VUVG-L10A-B52-ZT-M3-1P3**
	5/3-way valve			
	Internal pilot air supply	Mid-position closed, mechanical spring return	**566439**	**VUVG-L10A-P53C-T-M3-1P3**
		Mid-position exhausted, mechanical spring return	**566440**	**VUVG-L10A-P53E-T-M3-1P3**
		Mid-position pressurised, mechanical spring return	**566441**	**VUVG-L10A-P53U-T-M3-1P3**
	External pilot air supply	Mid-position closed, mechanical spring return	**566445**	**VUVG-L10A-P53C-ZT-M3-1P3**
		Mid-position exhausted, mechanical spring return	**566446**	**VUVG-L10A-P53E-ZT-M3-1P3**
		Mid-position pressurised, mechanical spring return	**566447**	**VUVG-L10A-P53U-ZT-M3-1P3**

Manifold assembly

In-line valves for manifold assembly

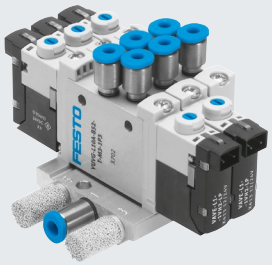

Dimensions Download CAD data ➔ www.festo.com

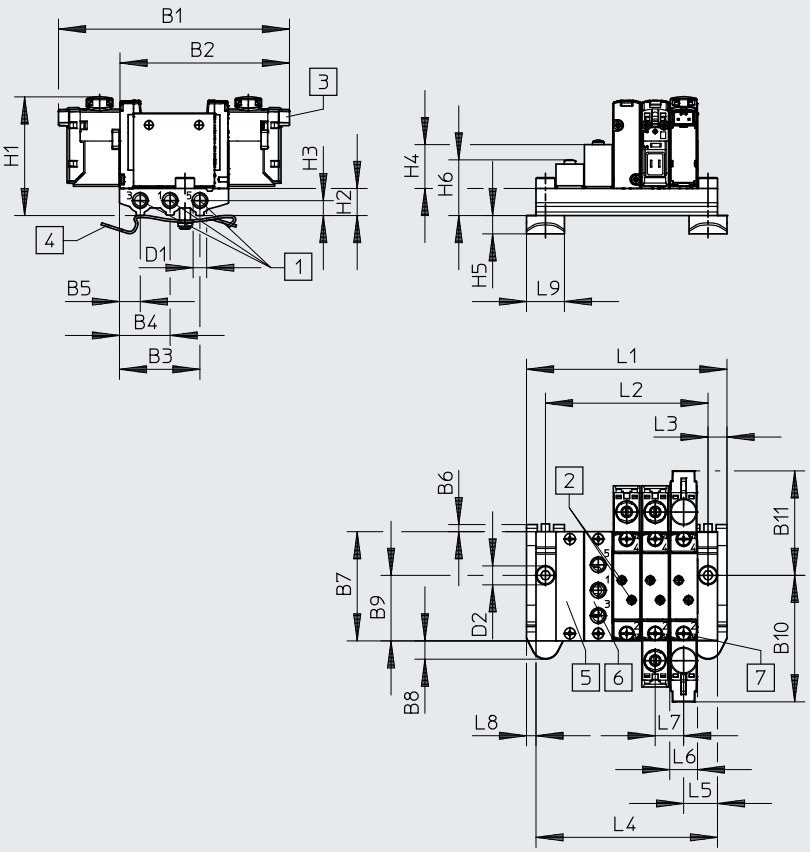

Note

More dimensions for E-boxes
a page 115

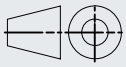

[1] Ports 1, 3 and 5: M5 (at both ends)
[2] Ports 2 and 4: M3
[3] Electrical connection for E-boxes and accessories
[4] DIN rail mounting (two M4x16 screws are required for mounting)
[5] Cover plate
[6] Supply plate, ports 1, 3 and 5: M5
[7] Valves/cover plate mounting on manifold rail: thread M2

Type	B1	B2	B3	B4	B5	B6	B7	B8	B9	B10	B11	D1
VABM-L1-10AS-M5	85.3	62.6	29.7	18.7	7.7	3	40.3	6.8	24.2	46.7	38.6	M5

Type	D2 ø	H1	H2	H3	H4	H5	H6	L3	L5	L6	L7	L8	L9
VABM-L1-10AS-M5	4.5	43.8	10	5.5	16.2	6.8	20.3	7	12.5	10.3	10.5	3.5	14

Valve positions	2	3	4	5	6	7	8	9	10	12	14	16
L1	42.5	53	63.5	74	84.5	95	105.5	116	126.5	147.5	168.5	189.5
L2	28.5	39	49.5	60	70.5	81	91.5	102	112.5	133.5	154.5	175.5
L4	35.5	46	56.5	67	77.5	88	98.5	109	119.5	140.5	161.5	182.5
VABM weight [g]	26	34	42	50	58	66	74	82	90	106	122	138

Ordering data

Technical data – Manifold rails

	Connection	CRC	Material2)	Operating pressure		Max. tightening torque for mounting [Nm]		
	1, 3, 5			[MPa]	[bar]	Valve	DIN rail	Wall
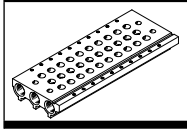	M5	2[1)]	Wrought aluminium alloy	–0.09 ... 1	–0.9 ... 10	0.45	1.5	3

1) Corrosion resistance class CRC 2 to Festo standard FN 940070
Moderate corrosion stress. Indoor applications in which condensation can occur. External visible parts with primarily decorative surface requirements that are in direct contact with a normal industrial environment.

2) Information on materials: RoHS-compliant.

Ordering data – Manifold rail

	Description		Part no.	Type
Manifold rail for in-line valves (manifold assembly)				
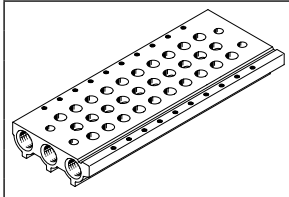	For size M3	2 valve positions	**566522**	**VABM-L1-10AS-M5-2**
		3 valve positions	**566523**	**VABM-L1-10AS-M5-3**
		4 valve positions	**566524**	**VABM-L1-10AS-M5-4**
		5 valve positions	**566525**	**VABM-L1-10AS-M5-5**
		6 valve positions	**566526**	**VABM-L1-10AS-M5-6**
		7 valve positions	**566527**	**VABM-L1-10AS-M5-7**
		8 valve positions	**566528**	**VABM-L1-10AS-M5-8**
		9 valve positions	**566529**	**VABM-L1-10AS-M5-9**
		10 valve positions	**566530**	**VABM-L1-10AS-M5-10**
		12 valve positions	**566531**	**VABM-L1-10AS-M5-12**
		14 valve positions	**566532**	**VABM-L1-10AS-M5-14**
		16 valve positions	**566533**	**VABM-L1-10AS-M5-16**
Cover plate				Datasheets a Internet: vabb
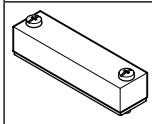	For valve position on manifold rail, including screws and seal		**569986**	**VABB-L1-10A**
Separator				Datasheets a Internet: vabd
	For creating pressure zones		**570872**	**VABD-4.2-B**
Supply plate				Datasheets a Internet: vabf
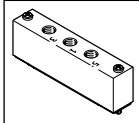	For valve position on manifold rail, including screws and seal		**569990**	**VABF-L1-10A-P3A4-M5**
Seals for in-line valves				Datasheets a Internet: vabd
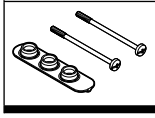	For in-line valves M3	Delivery quantity: 10 sets (each with 2 screws and 1 seal)	**566670**	**VABD-L1-10AX-S-M3**

Datasheet

Function
2x 3/2C
5/2-way, single solenoid
5/2-way, double solenoid valve

Circuit diagrams a Page 14

- Size 10 mm
- Flow rate
  180 ... 195 l/min
- Voltage
  24 V DC

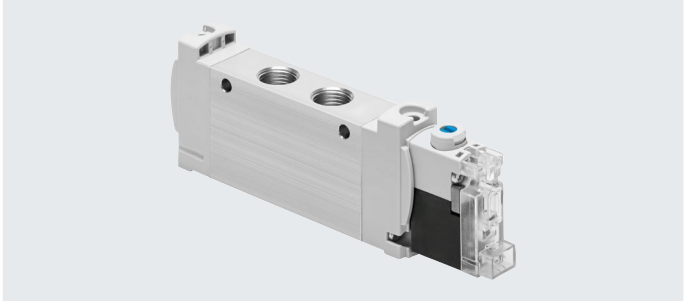

General technical data VUVG-LK				
Valve function		T32-A	M52-A	B52
Normal position		C1)	–	–
Stable position		Monostable		Bistable
Pneumatic spring return		Yes	Yes	–
Design		Piston spool		
Sealing principle		Soft		
Actuation type		Electrical		
Type of control		Piloted		
Pilot air supply		Internal		
Exhaust air function		Can be throttled		
Manual override		Detenting, non-detenting		
Type of mounting		Optionally via through-holes2) or on manifold rail		
Mounting position		Any		
Standard nominal flow rate	[l/min]	180	195	195
Switching time on/off	[ms]	12/14	14/17	–
Switching time changeover	[ms]	–		7/8
Size	[mm]	10		
Connection 2, 4		M5		
Product weight	[g]	55	45	57
Corrosion resistance class CRC3)		0		
Certificate-issuing authority		UL MH19482		
Certification		c UL us – Recognized (OL)		

1) C = Normally closed
2) If several valves are to be screwed together via the through-holes to form a block, a minimum distance of 0.3 mm must be ensured by inserting spacers
3) More information www.festo.com/x/topic/crc

Safety characteristics		
Max. positive test pulse with logic 0	[µs]	1600
Max. negative test pulse with logic 1	[µs]	3000
Shock resistance		Shock test with severity level 1 to FN 942017-5 and EN 60068-2-27
Vibration resistant		Transport application test with severity level 1 to FN 942017-4 and EN 60068-2-6

Datasheet

Operating and environmental conditions				
Valve function		T32-A1)	M52-A1)	B52
Operating medium		Compressed air to ISO 8573-2010 [7:4:4]		
Note on the operating/pilot medium		Lubricated operation possible (in which case lubricated operation will always be required)		
Operating pressure	[MPa]	0.15 ... 0.7	0.25 ... 0.7	0.15 ... 0.7
	[bar]	1.5 ... 7	2.5 ... 7	1.5 ... 7
Ambient temperature	[°C]	–5 ... +50		
Temperature of medium	[°C]	–5 ... +50		

1) Pneumatic spring

Electrical data		
Electrical connection		Via E-box a page 115
Operating voltage	[V DC]	24 ±10%
Power	[W]	0.7
Duty cycle	[%]	100
Degree of protection to EN 60529		IP40 (with plug socket), IP65 (with M8)
Signal status indication		LED
Maximum switching frequency	[Hz]	2

Information on materials	
Housing	Wrought aluminium alloy
Seals	HNBR, NBR
Note on materials	RoHs-compliant
LABS (PWIS) conformity	VDMA24364-Zone III

Pin assignment for E-box			
	Pin		Description
Rectangular plug, connection pattern H			
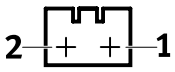	1	+ or –	Protective circuit without holding current reduction
	2	+ or –	
Round plug, M8, 3-pin			
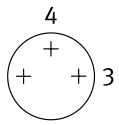	1	Not used	Protective circuit without holding current reduction
	3	+ or –	
	4	+ or –	

Protective circuit without holding current reduction

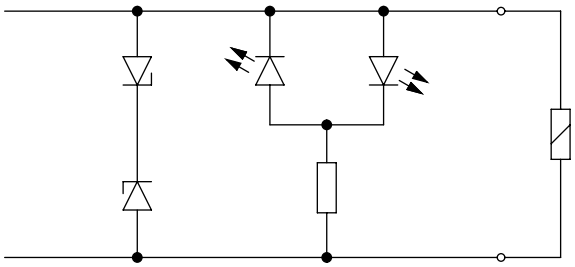

The solenoid coils have a protective circuit to arrest sparks and protect against polarity reversal.

Datasheet

Dimensions Download CAD data ➔ www.festo.com

2x 3/2-way, 5/2-way valve, double solenoid

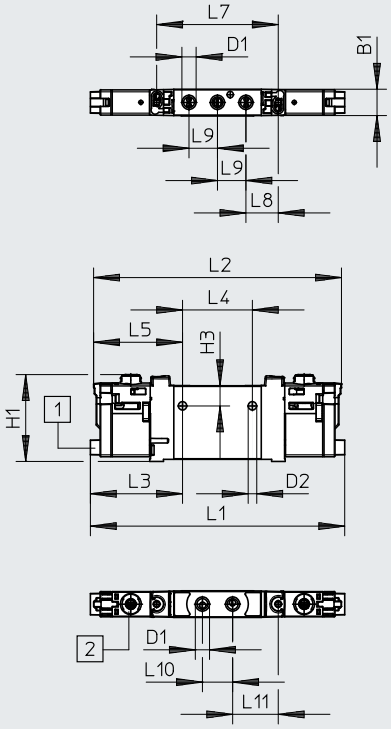

5/2-way valve, single solenoid

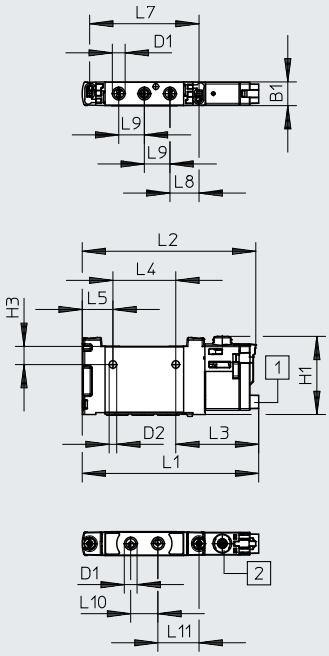

Note

More dimensions for E-boxes
a page 115

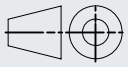

[1] Horizontal electrical connection [2] Manual override

Type	B1	D1	D2	H1	H3	L1	L2	L3
VUVG-LK10-T32C-...-M5...	10.2	M5	3.3	33.6	7.8	98.3	95.8	35.7
VUVG-LK10-B52-...-M5...								
VUVG-LK10-M52-...-M5...						75.9	74.6	

Type	L4	L5	L7	L8	L9	L10	L11
VUVG-LK10-T32C-...-M5...	27	34.4	47	12.5	11	11.7	17.7
VUVG-LK10-B52-...-M5...							
VUVG-LK10-M52-...-M5...		13.2					

Ordering data

★ Core Range

Ordering data

	Description		Part no.	Type
In-line valve M5, with E-box R8				
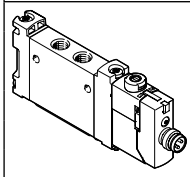	**2x 3/2-way valve**			
	Internal pilot air supply	Normally closed, pneumatic spring return	**8042542**	**VUVG-LK10-T32C-AT-M5-1R8L-S**
	5/2-way valve, single solenoid			
	Internal pilot air supply	Pneumatic spring return	**8042543**	**VUVG-LK10-M52-AT-M5-1R8L-S**
	5/2-way valve, double solenoid			
	Internal pilot air supply		**8042544**	**VUVG-LK10-B52-T-M5-1R8L-S**
In-line valve M5, with E-box H2				
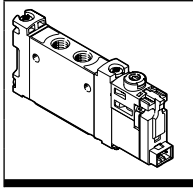	**2x 3/2-way valve**			
	Internal pilot air supply	Normally closed, pneumatic spring return	**8042538**	**VUVG-LK10-T32C-AT-M5-1H2L-S**
	5/2-way valve, single solenoid			
	Internal pilot air supply	Pneumatic spring return	**8042539**	**VUVG-LK10-M52-AT-M5-1H2L-S**
	5/2-way valve, double solenoid			
	Internal pilot air supply		**8042540**	**VUVG-LK10-B52-T-M5-1H2L-S**

Ordering data

	Description		Part no.	Type
In-line valve M5, for battery manufacturing				
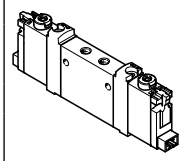	**2x 3/2-way valve**			
	Internal pilot air supply	Normally closed, pneumatic spring return	**8173199**	**VUVG-LK10-T32C-AT-M5-1H2L-F1A**
	5/2-way valve, single solenoid			
	Internal pilot air supply	Pneumatic spring return	**8173200**	**VUVG-LK10-M52-AT-M5-1H2L-F1A**
	5/2-way valve, double solenoid			
	Internal pilot air supply		**8173201**	**VUVG-LK10-B52-T-M5-1H2L-F1A**

Datasheet

Function
2x 3/2C
5/2-way, single solenoid
5/2-way, double solenoid valve

Circuit diagrams a Page 14

- Size 10 mm
- Flow rate
  280 ... 340 l/min
- Voltage
  24 V DC

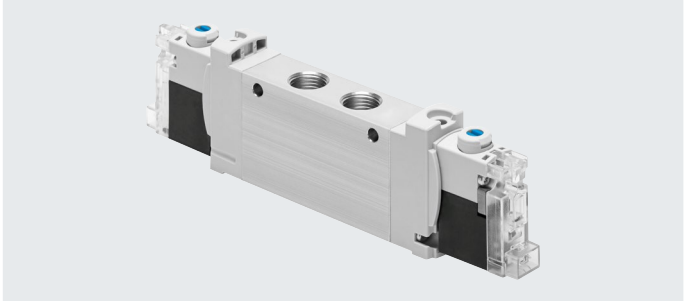

General technical data VUVG-LK				
Valve function		T32-A	M52-A	B52
Normal position		C1)	–	–
Stable position		Monostable		Bistable
Pneumatic spring return		Yes	Yes	–
Design		Piston spool		
Sealing principle		Soft		
Actuation type		Electrical		
Type of control		Piloted		
Pilot air supply		Internal		
Exhaust air function		Can be throttled		
Manual override		Detenting, non-detenting		
Type of mounting		Optionally via through-holes2) or on manifold rail		
Mounting position		Any		
Standard nominal flow rate	[l/min]	280	340	340
Switching time on/off	[ms]	12/14	14/17	–
Switching time changeover	[ms]	–		7
Size	[mm]	10		
Connection 2, 4		M7		
Product weight	[g]	55	45	57
Corrosion resistance class CRC3)		0		
Certificate-issuing authority		UL MH19482		
Certification		c UL us – Recognized (OL)		

1) C = Normally closed
2) If several valves are to be screwed together via the through-holes to form a block, a minimum distance of 0.3 mm must be ensured by inserting spacers
3) More information www.festo.com/x/topic/crc

Safety characteristics		
Max. positive test pulse with logic 0	[µs]	1600
Max. negative test pulse with logic 1	[µs]	3000
Shock resistance		Shock test with severity level 1 to FN 942017-5 and EN 60068-2-27
Vibration resistant		Transport application test with severity level 1 to FN 942017-4 and EN 60068-2-6

Datasheet

Operating and environmental conditions				
Valve function		T32-A1)	M52-A1)	B52
Operating medium		Compressed air to ISO 8573-2010 [7:4:4]		
Note on the operating/pilot medium		Lubricated operation possible (in which case lubricated operation will always be required)		
Operating pressure	[MPa]	0.15 ... 0.7	0.25 ... 0.7	0.15 ... 0.7
	[bar]	1.5 ... 7	2.5 ... 7	1.5 ... 7
Ambient temperature	[°C]	–5 ... +50		
Temperature of medium	[°C]	–5 ... +50		

1) Pneumatic spring

Electrical data		
Electrical connection		Via E-box a page 113
Operating voltage	[V DC]	24 ±10%
Power	[W]	0.7
Duty cycle	[%]	100
Degree of protection to EN 60529		IP40 (with plug socket), IP65 (with M8)
Signal status indication		LED
Maximum switching frequency	[Hz]	2

Information on materials	
Housing	Wrought aluminium alloy
Seals	HNBR, NBR
Note on materials	RoHs-compliant
LABS (PWIS) conformity	VDMA24364-Zone III

Pin assignment for E-box			
	Pin		Description
Rectangular plug, connection pattern H			
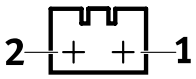	1	+ or –	Protective circuit without holding current reduction
	2	+ or –	
Round plug, M8, 3-pin			
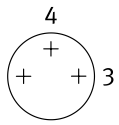	1	Not used	Protective circuit without holding current reduction
	3	+ or –	
	4	+ or –	

Protective circuit without holding current reduction

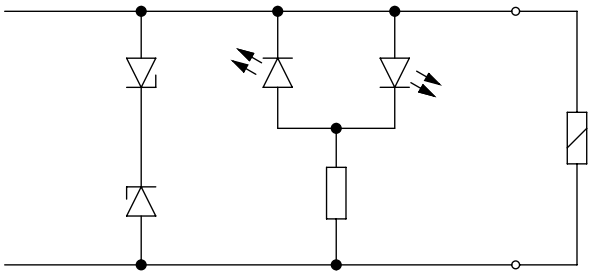

The solenoid coils have a protective circuit to arrest sparks and protect against polarity reversal.

Datasheet

Dimensions Download CAD data ➔ www.festo.com

2x 3/2-way, 5/2-way valve, double solenoid

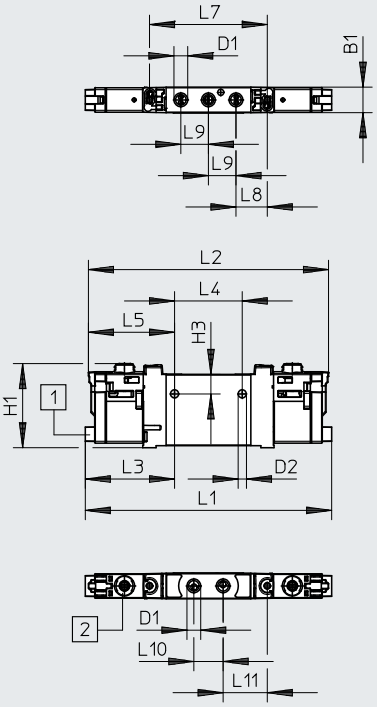

5/2-way valve, single solenoid

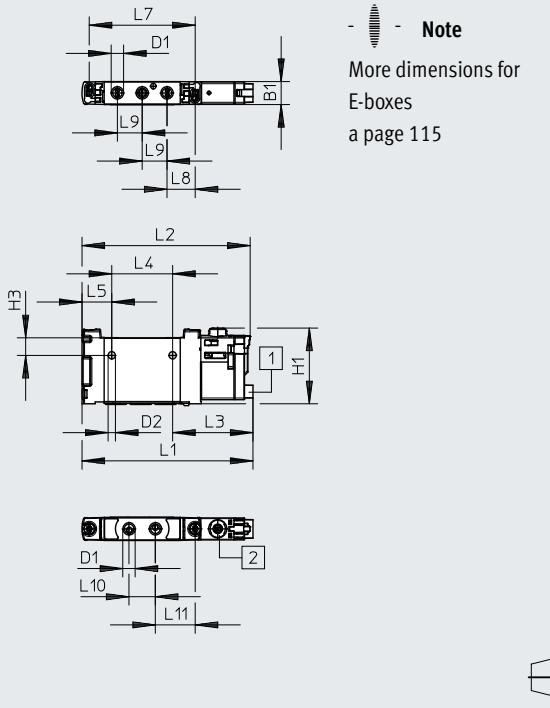

Note

More dimensions for E-boxes
a page 115

[1] Horizontal electrical connection [2] Manual override

Type	B1	D1	D2	H1	H3	L1	L2	L3
VUVG-LK10-T32C-...-M7...	10.2	M7	3.3	33.6	7.8	98.3	95.8	35.7
VUVG-LK10-B52-...-M7...								
VUVG-LK10-M52-...-M7...						75.9	74.6	35.7

Type	L4	L5	L7	L8	L9	L10	L11
VUVG-LK10-T32C-...-M7...	27	34.4	47	12.5	11	11.7	17.7
VUVG-LK10-B52-...-M7...							
VUVG-LK10-M52-...-M7...		13.2					

Ordering data

★ Core Range

Ordering data

	Description		Part no.	Type
In-line valve M7, with E-box R8				
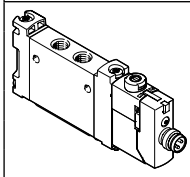	**2x 3/2-way valve**			
	Internal pilot air supply	Normally closed, pneumatic spring return	**8042550**	**VUVG-LK10-T32C-AT-M7-1R8L-S**
	5/2-way valve, single solenoid			
	Internal pilot air supply	Pneumatic spring return	**8042551**	**VUVG-LK10-M52-AT-M7-1R8L-S**
	5/2-way valve, double solenoid			
	Internal pilot air supply		**8042552**	**VUVG-LK10-B52-T-M7-1R8L-S**
In-line valve M7, with E-box H2				
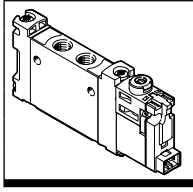	**2x 3/2-way valve**			
	Internal pilot air supply	Normally closed, pneumatic spring return	**8042546**	**VUVG-LK10-T32C-AT-M7-1H2L-S**
	5/2-way valve, single solenoid			
	Internal pilot air supply	Pneumatic spring return	**8042547**	**VUVG-LK10-M52-AT-M7-1H2L-S**
	5/2-way valve, double solenoid			
	Internal pilot air supply		**8042548**	**VUVG-LK10-B52-T-M7-1H2L-S**

Ordering data

	Description		Part no.	Type
In-line valve M7, for battery manufacturing				
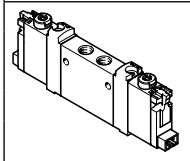	**2x 3/2-way valve**			
	Internal pilot air supply	Normally closed, pneumatic spring return	**8173202**	**VUVG-LK10-T32C-AT-M7-1H2L-F1A**
	5/2-way valve, single solenoid			
	Internal pilot air supply	Pneumatic spring return	**8173203**	**VUVG-LK10-M52-AT-M7-1H2L-F1A**
	5/2-way valve, double solenoid			
	Internal pilot air supply		**8173204**	**VUVG-LK10-B52-T-M7-1H2L-F1A**

Datasheet

Function
2x 3/2C, 2x 3/2U, 2x 3/2H
5/2-way, single solenoid
5/2-way, double solenoid valve
5/3C, 5/3U, 5/3E

Circuit diagrams a Page 14

- Size 10 mm
- Flow rate
  125 ... 220 l/min
- Voltage
  5, 12 and 24 V DC

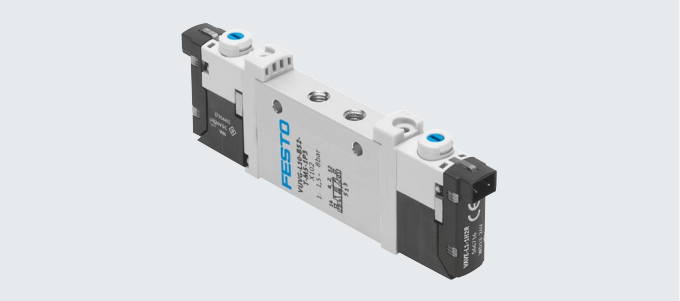

General technical data VUVG-L M5

Valve function			T32-A			T32-M			M52-R	B52	M52-M	P53		
Normal position			C1)	U2)	H4)	C1)	U2)	H4)	–	–	–	C1)	U2)	E3)
Stable position			Monostable							Bistable	Monostable	Monostable		
Pneumatic spring return			Yes			No			Yes5)	–	No	–		
Mechanical spring return			No			Yes			Yes5)	–	Yes	Yes		
Vacuum operation at port 1			No			Only with external pilot air supply								
Design			Piston spool											
Sealing principle			Soft											
Actuation type			Electrical											
Type of control			Piloted											
Pilot air supply			Internal or external											
Exhaust air function			Can be throttled											
Manual override			Choice of non-detenting, covered, non-detenting/detenting or detenting											
Type of mounting			Optionally via through-holes6) or on manifold rail											
Mounting position			Any											
Nominal width		[mm]	2.7			1.9	1.8		3.2		2.2	3.2		
Standard nominal flow rate		[l/min]	150			135	135	135	220		220	210		
Flow rate on manifold rail		[l/min]	150			135	125	125	220		190	210		
Switching time on/off		[ms]	6/15			8/11			8/17	–	8/24	11/30		
Switching time changeover		[ms]	–							9	–	14		
Size		[mm]	10											
Connection	1, 2, 3, 4, 5		M5											
	12/14		M3											
Product weight		[g]	55			54			45	55	44	55		
Certificate-issuing authority	VUVG-...-F1A		UL MH19482											
Certification			c UL us – Recognized (OL)											
			RCM											
CE marking (see declaration of conformity)7)			To EU EMC Directive											
Corrosion resistance class CRC8)			2											

1) C=Normally closed/mid-position closed
2) U=Normally open/mid-position pressurised
3) E=Mid-position exhausted
4) H=2x 3/2-way valve in one housing with 1x normally closed and 1x normally open
5) Combined reset method
6) If several valves are to be screwed together via the through-holes to form a block, a minimum distance of 0.3 mm must be ensured by inserting spacers.
7) For information about the area of use, see the EC declaration of conformity at: www.festo.com/catalogue/... d Support/Downloads.
If the devices are subject to usage restrictions in residential, commercial or light-industrial environments, further measures for the reduction of the emitted interference may be necessary.
8) More information www.festo.com/x/topic/crc

Datasheet

Operating and environmental conditions								
Valve function			T32-A1)	T32-M3)	M52-R2)	B52	M52-M3)	P53
Operating medium			Compressed air to ISO 8573-2010 [7:4:4]					
Operating pressure	Internal	[MPa]	0.15 ... 0.8	0.25 ... 0.8	0.25 ... 0.8	0.15 ... 0.8	0.3 ... 0.8	0.3 ... 0.8
		[bar]	1.5 ... 8	2.5 ... 8	2.5 ... 8	1.5 ... 8	3 ... 8	3 ... 8
	External	[MPa]	0.15 ... 1	–0.09 ... 1			–0.09 ...0.8	–0.09 ... 1
		[bar]	1.5 ... 10	–0.9 ... 10			–0.9 ...8	–0.9 ... 10
Pilot pressure		[MPa]	0.15 ... 0.8	0.2 ... 0.8	0.25 ... 0.8	0.15 ... 0.8	0.3 ... 0.8	
		[bar]	1.5 ... 8	2 ... 8	2.5 ... 8	1.5 ... 8	3 ... 8	
Ambient temperature		[°C]	–5 ... +50, with holding current reduction –5 ... +60					
Temperature of medium		[°C]	–5 ... +50, with holding current reduction –5 ... +60					
Cleanroom class			ISO class 5					

1) Pneumatic spring
2) Mixed, pneumatic/mechanical spring
3) Mechanical spring

Electrical data		
Electrical connection		Plug M8x1, A-coded to EN 61076-2-104, 3-pin
VUVG-...-W1		Connection pattern H, horizontal connection, 2-pin, cable with open end
Operating voltage	[V DC]	5, 12 and 24 ±10%
Power	[W]	1, reduced to 0.35 with holding current reduction
Duty cycle	[%]	100
Degree of protection to EN 60529		IP40 (with plug socket), IP65 (with M8)

Information on materials	
Housing	Wrought aluminium alloy
Seals	HNBR, NBR
Note on materials	RoHs-compliant
LABS (PWIS) conformity	VDMA24364-B1/B2-L

Datasheet

Dimensions Download CAD data ➔ www.festo.com

2x 3/2-way, 5/2-way and 5/3-way valve

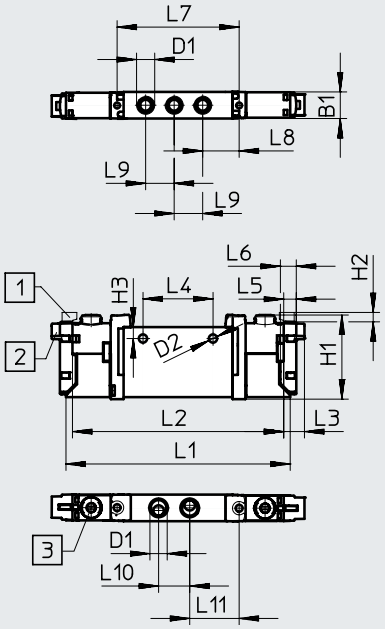

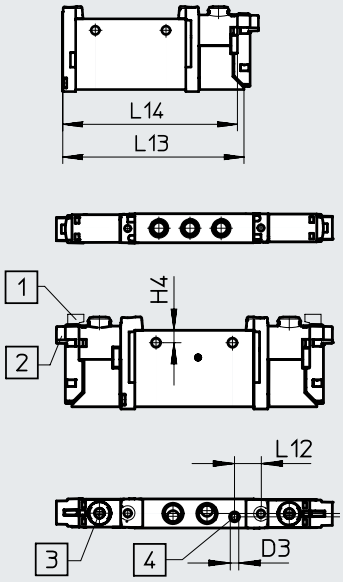

Note

More dimensions for E-boxes
a page 115

[1] Vertical electrical connection [2] Horizontal electrical connection [3] Manual override [4] Port for external pilot air supply

Type	B1	B2	D1	D2	D3	H1	H2	H3	L1	L2	L3	L4
VUVG-L-10 -...-M5...	10.2	–	M5	3.2	M3	32.5	3.6	4.4	86.5	81.5	8	27
VUVG-S-10 -...-M5...												

Type	L5	L6	L7	L8	L9	L10	L11	L12	L13	L14
VUVG-L-10 -...-M5...	4.85	6.15	47	14	11	12	19	–	69.2	66.7
VUVG-S-10 -...-M5...										

Ordering data

★ Core Range

Ordering data

	Description		Part no.	Type
In-line valve M5, with E-box R8				
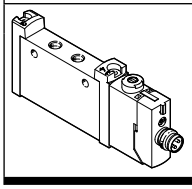	**5/3-way valve**			
	Internal pilot air supply	Mid-position closed, mechanical spring return	**577346**	**VUVG-L10-P53C-T-M5-1R8L**

Ordering data

	Description		Part no.	Type
In-line valve M5, without E-box				
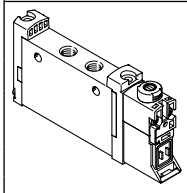	**2x 3/2-way valve**			
	Internal pilot air supply	Normally closed, pneumatic spring return	**566454**	**VUVG-L10-T32C-AT-M5-1P3**
		Normally open, pneumatic spring return	**566455**	**VUVG-L10-T32U-AT-M5-1P3**
		1x normally open, 1x normally closed, pneumatic spring return	**566456**	**VUVG-L10-T32H-AT-M5-1P3**
		Normally closed, mechanical spring return	**574348**	**VUVG-L10-T32C-MT-M5-1P3**
		Normally open, mechanical spring return	**574349**	**VUVG-L10-T32U-MT-M5-1P3**
		1x normally open, 1x normally closed, mechanical spring return	**574350**	**VUVG-L10-T32H-MT-M5-1P3**
	External pilot air supply	Normally closed, pneumatic spring return	**566463**	**VUVG-L10-T32C-AZT-M5-1P3**
		Normally open, pneumatic spring return	**566464**	**VUVG-L10-T32U-AZT-M5-1P3**
		1x normally open, 1x normally closed, pneumatic spring return	**566465**	**VUVG-L10-T32H-AZT-M5-1P3**
		Normally closed, mechanical spring return	**574352**	**VUVG-L10-T32C-MZT-M5-1P3**
		Normally open, mechanical spring return	**574353**	**VUVG-L10-T32U-MZT-M5-1P3**
		1x normally open, 1x normally closed, mechanical spring return	**574354**	**VUVG-L10-T32H-MZT-M5-1P3**
	5/2-way valve, single solenoid			
	Internal pilot air supply	Pneumatic/mechanical spring return	**566457**	**VUVG-L10-M52-RT-M5-1P3**
		Mechanical spring return	**574351**	**VUVG-L10-M52-MT-M5-1P3**
	External pilot air supply	Pneumatic/mechanical spring return	**566466**	**VUVG-L10-M52-RZT-M5-1P3**
		Mechanical spring return	**574355**	**VUVG-L10-M52-MZT-M5-1P3**

Ordering data

Ordering data

	Description		Part no.	Type
In-line valve M5, without E-box				
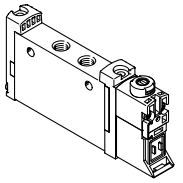	**5/2-way valve, double solenoid**			
	Internal pilot air supply		**566458**	**VUVG-L10-B52-T-M5-1P3**
	External pilot air supply		**566467**	**VUVG-L10-B52-ZT-M5-1P3**
	5/3-way valve			
	Internal pilot air supply	Mid-position closed, mechanical spring return	**566459**	**VUVG-L10-P53C-T-M5-1P3**
		Mid-position exhausted, mechanical spring return	**566460**	**VUVG-L10-P53E-T-M5-1P3**
		Mid-position pressurised, mechanical spring return	**566461**	**VUVG-L10-P53U-T-M5-1P3**
	External pilot air supply	Mid-position closed, mechanical spring return	**566468**	**VUVG-L10-P53C-ZT-M5-1P3**
		Mid-position exhausted, mechanical spring return	**566469**	**VUVG-L10-P53E-ZT-M5-1P3**
		Mid-position pressurised, mechanical spring return	**566470**	**VUVG-L10-P53U-ZT-M5-1P3**
In-line valve M5, with E-box R8				
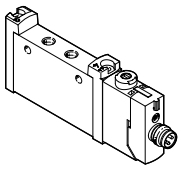	**2x 3/2-way valve**			
	Internal pilot air supply	Normally closed, pneumatic spring return	**577347**	**VUVG-L10-T32C-AT-M5-1R8L**
		Normally open, pneumatic spring return	**8031466**	**VUVG-L10-T32U-AT-M5-1R8L**
		1x normally open, 1x normally closed, pneumatic spring return	**8031467**	**VUVG-L10-T32H-AT-M5-1R8L**
		Normally closed, mechanical spring return	**8031468**	**VUVG-L10-T32C-MT-M5-1R8L**
		Normally open, mechanical spring return	**8031469**	**VUVG-L10-T32U-MT-M5-1R8L**
		1x normally open, 1x normally closed, mechanical spring return	**8031470**	**VUVG-L10-T32H-MT-M5-1R8L**
	5/2-way valve, single solenoid			
	Internal pilot air supply	Pneumatic/mechanical spring return	**572634**	**VUVG-L10-M52-RT-M5-1R8L**
		Mechanical spring return	**8031472**	**VUVG-L10-M52-MT-M5-1R8L**
	5/2-way valve, double solenoid			
	Internal pilot air supply		**576664**	**VUVG-L10-B52-T-M5-1R8L**
	5/3-way valve			
	Internal pilot air supply	Mid-position exhausted, mechanical spring return	**8031475**	**VUVG-L10-P53E-T-M5-1R8L**
		Mid-position pressurised, mechanical spring return	**8031476**	**VUVG-L10-P53U-T-M5-1R8L**
In-line valve M5, with E-box H2				
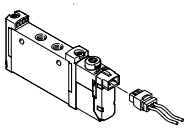	**5/2-way valve, single solenoid**			
	Internal pilot air supply	Pneumatic/mechanical spring return	**577316**	**VUVG-L10-M52-RT-M5-1H2L-W1**
		Mechanical spring return	**578162**	**VUVG-L10-M52-MT-M5-1H2L-W1**
	5/2-way valve, double solenoid			
	Internal pilot air supply		**577317**	**VUVG-L10-B52-T-M5-1H2L-W1**
Semi in-line valve M5, with E-box H2				
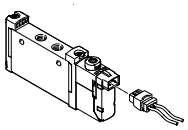	**5/2-way valve, single solenoid**			
	Internal pilot air supply	Pneumatic/mechanical spring return	**577324**	**VUVG-S10-M52-RT-M5-1H2L-W1**

Ordering data

Ordering data

	Description		Part no.	Type
In-line valve M5, for battery manufacturing				
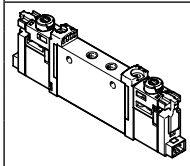	**2x 3/2-way valve**			
	Internal pilot air supply	Normally closed, mechanical spring return	**8164322**	**VUVG-L10-T32C-MT-M5-1H2L-F1A**
		Normally open, pneumatic spring return	**8164323**	**VUVG-L10-T32U-AT-M5-1H2L-F1A**
		Normally open, mechanical spring return	**8164324**	**VUVG-L10-T32U-MT-M5-1H2L-F1A**
		1x normally open, 1x normally closed, pneumatic spring return	**8164325**	**VUVG-L10-T32H-AT-M5-1H2L-F1A**
		1x normally open, 1x normally closed, mechanical spring return	**8164326**	**VUVG-L10-T32H-MT-M5-1H2L-F1A**
	External pilot air supply	Normally closed, pneumatic spring return	**8164331**	**VUVG-L10-T32C-AZT-M5-1H2L-F1A**
		Normally closed, mechanical spring return	**8164332**	**VUVG-L10-T32C-MZT-M5-1H2L-F1A**
		Normally open, pneumatic spring return	**8164333**	**VUVG-L10-T32U-AZT-M5-1H2L-F1A**
		Normally open, mechanical spring return	**8164334**	**VUVG-L10-T32U-MZT-M5-1H2L-F1A**
		1x normally open, 1x normally closed, pneumatic spring return	**8164335**	**VUVG-L10-T32H-AZT-M5-1H2L-F1A**
		1x normally open, 1x normally closed, mechanical spring return	**8164336**	**VUVG-L10-T32H-MZT-M5-1H2L-F1A**
	5/2-way valve, single solenoid			
	Internal pilot air supply	Mechanical spring return	**8164327**	**VUVG-L10-M52-MT-M5-1H2L-F1A**
	External pilot air supply	Pneumatic/mechanical spring return	**8164337**	**VUVG-L10-M52-RZT-M5-1H2L-F1A**
		Mechanical spring return	**8164338**	**VUVG-L10-M52-MZT-M5-1H2L-F1A**
	5/2-way valve, double solenoid			
	External pilot air supply		**8164339**	**VUVG-L10-B52-ZT-M5-1H2L-F1A**
	5/3-way valve			
	Internal pilot air supply	Mid-position closed	**8164328**	**VUVG-L10-P53C-T-M5-1H2L-F1A**
		Mid-position exhausted	**8164329**	**VUVG-L10-P53E-T-M5-1H2L-F1A**
		Mid-position pressurised	**8164330**	**VUVG-L10-P53U-T-M5-1H2L-F1A**
	External pilot air supply	Mid-position closed	**8164340**	**VUVG-L10-P53C-ZT-M5-1H2L-F1A**
		Mid-position exhausted	**8164341**	**VUVG-L10-P53E-ZT-M5-1H2L-F1A**
		Mid-position pressurised	**8164342**	**VUVG-L10-P53U-ZT-M5-1H2L-F1A**

Datasheet

Function
2x 3/2C, 2x 3/2U, 2x 3/2H
5/2-way, single solenoid
5/2-way, double solenoid valve
5/3C, 5/3U, 5/3E

Circuit diagrams a Page 14

- Size 10 mm
- Flow rate
  130 ... 380 l/min
- Voltage
  5, 12 and 24 V DC

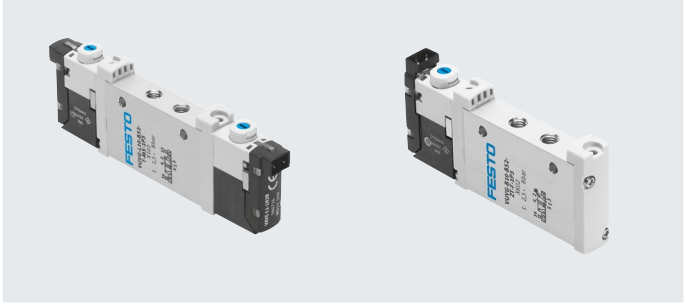

General technical data VUVG-L M7

Valve function			T32-A			T32-M			M52-R	B52	M52-M	P53		
Normal position			C1)	U2)	H4)	C1)	U2)	H4)	–	–	–	C1)	U2)	E3)
Stable position			Monostable							Bistable	Monostable	Monostable		
Pneumatic spring return			Yes			No			Yes5)	–	No	–		
Mechanical spring return			No			Yes			Yes5)	–	Yes	Yes		
Vacuum operation at port 1			No			Only with external pilot air supply								
Design			Piston spool											
Sealing principle			Soft											
Actuation type			Electrical											
Type of control			Piloted											
Pilot air supply			Internal or external											
Exhaust air function			Can be throttled											
Manual override			Choice of non-detenting, covered, non-detenting/detenting or detenting											
Type of mounting			Optionally via through-holes6) or on manifold rail											
Mounting position			Any											
Nominal width		[mm]	2.7			2.0	1.9	1.9	4.0		2.8	3.5		
Standard nominal flow rate		[l/min]	190			155	155	155	330	380	320	320		
Flow rate on manifold rail		[l/min]	170			140	130	130	320	340	290	300		
Switching time on/off		[ms]	6/15			8/11			7/17	–	8/24	11/30		
Switching time changeover		[ms]	–							9		14		
Size		[mm]	10											
Connection	1, 2, 3, 4, 5		M7											
	12/14		M3											
Product weight		[g]	55			54			45	55	44	55		
Certificate-issuing authority	VUVG-...-F1A		UL MH19482											
Certification			c UL us – Recognized (OL)											
			RCM											
CE marking (see declaration of conformity)7)			To EU EMC Directive											
Corrosion resistance class CRC8)			2											

1) C=Normally closed/mid-position closed
2) U=Normally open/mid-position pressurised
3) E=Mid-position exhausted
4) H=2x 3/2-way valve in one housing with 1x normally closed and 1x normally open
5) Combined reset method
6) If several valves are to be screwed together via the through-holes to form a block, a minimum distance of 0.3 mm must be ensured by inserting spacers.
7) For information about the area of use, see the EC declaration of conformity at: www.festo.com/catalogue/... d Support/Downloads.
   If the devices are subject to usage restrictions in residential, commercial or light-industrial environments, further measures for the reduction of the emitted interference may be necessary.
8) More information www.festo.com/x/topic/crc

Datasheet

Operating and environmental conditions								
Valve function			T32-A1)	T32-M3)	M52-R2)	B52	M52-M3)	P53
Operating medium			Compressed air to ISO 8573-2010 [7:4:4]					
Operating pressure	Internal	[MPa]	0.15 ... 0.8	0.25 ... 0.8	0.25 ... 0.8	0.15 ... 0.8	0.3 ... 0.8	
		[bar]	1.5 ... 8	2.5 ... 8	2.5 ... 8	1.5 ... 8	3 ... 8	
	External	[MPa]	0.15 ... 1	–0.09 ... 1			–0.09 ... 0.8	–0.09 ... 1
		[bar]	1.5 ... 10	–0.9 ... 10			–0.9 ... 8	–0.9 ... 10
Pilot pressure		[MPa]	0.15 ... 0.8	0.2 ... 0.8	0.25 ... 0.8	0.15 ... 0.8	0.3 ... 0.8	0.3 ... 0.8
		[bar]	1.5 ... 8	2 ...8	2.5 ... 8	1.5 ... 8	3 ...8	3 ... 8
Ambient temperature		[°C]	–5 ... +50, with holding current reduction –5 ... +60					
Temperature of medium		[°C]	–5 ... +50, with holding current reduction –5 ... +60					
Cleanroom class			ISO class 5					

1) Pneumatic spring
2) Mixed, pneumatic/mechanical spring
3) Mechanical spring

Electrical data		
Electrical connection		Plug M8x1, A-coded to EN 61076-2-104, 3-pin
VUVG-...-W1		Connection pattern H, horizontal connection, 2-pin, cable with open end
Operating voltage	[V DC]	5, 12, 24 ±10%
Power	[W]	1, reduced to 0.35 with holding current reduction
Duty cycle	[%]	100
Degree of protection to EN 60529		IP40 (with plug socket), IP65 (with M8)

Information on materials	
Housing	Wrought aluminium alloy
Seals	HNBR, NBR
Note on materials	RoHs-compliant
LABS (PWIS) conformity	VDMA24364-B1/B2-L

Datasheet

Dimensions Download CAD data ➔ www.festo.com

2x 3/2-way, 5/2-way and 5/3-way valve

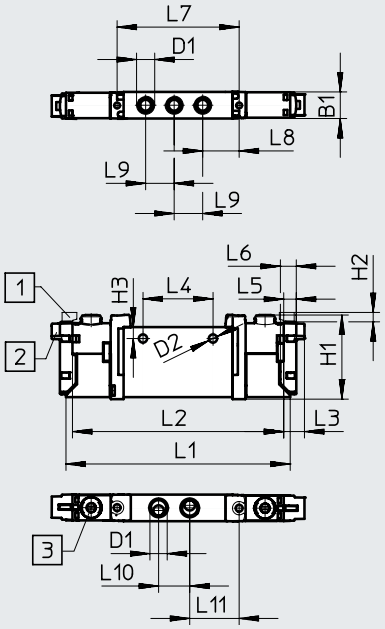

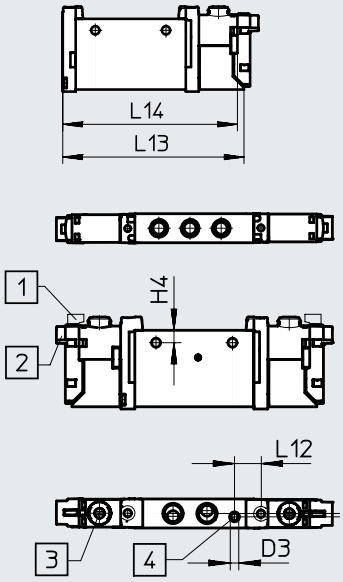

Note

More dimensions for E-boxes
a page 115

[1] Vertical electrical connection [2] Horizontal electrical connection [3] Manual override [4] Port for external pilot air supply

Type	B1	B2	D1	D2	D3	H1	H2	H3	L1	L2	L3	L4
VUVG-L-10 -...-M7...	10.2	–	M7	3.2	M3	32.5	3.6	4.4	86.5	81.5	8	27
VUVG-S-10 -...-M7...												

Type	L5	L6	L7	L8	L9	L10	L11	L12	L13	L14
VUVG-L-10 -...-M7...	4.85	6.15	47	14	11	12	19	–	69.2	66.7
VUVG-S-10 -...-M7...										

Ordering data

★ Core Range

Ordering data

	Description		Part no.	Type
In-line valve M7, with E-box R8				
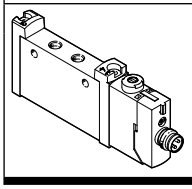	**5/3-way valve**			
	Internal pilot air supply	Mid-position closed, mechanical spring return	**574223**	**VUVG-L10-P53C-T-M7-1R8L**

Ordering data

	Description		Part no.	Type
In-line valve M7, without E-box				
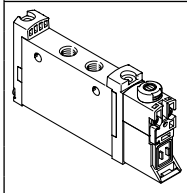	**2x 3/2-way valve**			
	Internal pilot air supply	Normally closed, pneumatic spring return	**566471**	**VUVG-L10-T32C-AT-M7-1P3**
		Normally open, pneumatic spring return	**566472**	**VUVG-L10-T32U-AT-M7-1P3**
		1x normally open, 1x normally closed, pneumatic spring return	**566473**	**VUVG-L10-T32H-AT-M7-1P3**
		Normally closed, mechanical spring return	**574356**	**VUVG-L10-T32C-MT-M7-1P3**
		Normally open, mechanical spring return	**574357**	**VUVG-L10-T32U-MT-M7-1P3**
		1x normally open, 1x normally closed, mechanical spring return	**574358**	**VUVG-L10-T32H-MT-M7-1P3**
	External pilot air supply	Normally closed, pneumatic spring return	**566479**	**VUVG-L10-T32C-AZT-M7-1P3**
		Normally open, pneumatic spring return	**566480**	**VUVG-L10-T32U-AZT-M7-1P3**
		1x normally open, 1x normally closed, pneumatic spring return	**566481**	**VUVG-L10-T32H-AZT-M7-1P3**
		Normally closed, mechanical spring return	**574360**	**VUVG-L10-T32C-MZT-M7-1P3**
		Normally open, mechanical spring return	**574361**	**VUVG-L10-T32U-MZT-M7-1P3**
		Normally closed, mechanical spring return	**574362**	**VUVG-L10-T32H-MZT-M7-1P3**

Ordering data

Ordering data

	Description		Part no.	Type
In-line valve M7, without E-box				
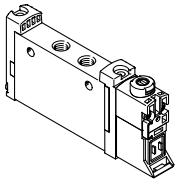	**5/2-way valve, single solenoid**			
	Internal pilot air supply	Mechanical spring return	**574359**	**VUVG-L10-M52-MT-M7-1P3**
		Pneumatic/mechanical spring return	**566474**	**VUVG-L10-M52-RT-M7-1P3**
	External pilot air supply	Mechanical spring return	**574363**	**VUVG-L10-M52-MZT-M7-1P3**
		Pneumatic/mechanical spring return	**566482**	**VUVG-L10-M52-RZT-M7-1P3**
	5/2-way valve, double solenoid			
	Internal pilot air supply		**566475**	**VUVG-L10-B52-T-M7-1P3**
	External pilot air supply		**566483**	**VUVG-L10-B52-ZT-M7-1P3**
	5/3-way valve			
	Internal pilot air supply	Mid-position closed, mechanical spring return	**566476**	**VUVG-L10-P53C-T-M7-1P3**
		Mid-position exhausted, mechanical spring return	**566477**	**VUVG-L10-P53E-T-M7-1P3**
		Mid-position pressurised, mechanical spring return	**566478**	**VUVG-L10-P53U-T-M7-1P3**
	External pilot air supply	Mid-position closed, mechanical spring return	**566484**	**VUVG-L10-P53C-ZT-M7-1P3**
		Mid-position exhausted, mechanical spring return	**566485**	**VUVG-L10-P53E-ZT-M7-1P3**
		Mid-position pressurised, mechanical spring return	**566486**	**VUVG-L10-P53U-ZT-M7-1P3**
In-line valve M7, with E-box R8				
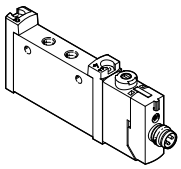	**2x 3/2-way valve**			
	Internal pilot air supply	Normally closed, pneumatic spring return	**574218**	**VUVG-L10-T32C-AT-M7-1R8L**
		Normally open, pneumatic spring return	**574219**	**VUVG-L10-T32U-AT-M7-1R8L**
		1x normally open, 1x normally closed, pneumatic spring return	**574220**	**VUVG-L10-T32H-AT-M7-1R8L**
		Normally closed, mechanical spring return	**8031480**	**VUVG-L10-T32C-MT-M7-1R8L**
		Normally open, mechanical spring return	**8031481**	**VUVG-L10-T32U-MT-M7-1R8L**
		1x normally open, 1x normally closed, mechanical spring return	**8031482**	**VUVG-L10-T32H-MT-M7-1R8L**
	5/2-way valve, single solenoid			
	Internal pilot air supply	Pneumatic/mechanical spring return	**574221**	**VUVG-L10-M52-RT-M7-1R8L**
		Mechanical spring return	**8031485**	**VUVG-L10-M52-MT-M7-1R8L**
	5/2-way valve, double solenoid			
	Internal pilot air supply		**574222**	**VUVG-L10-B52-T-M7-1R8L**
	5/3-way valve			
	Internal pilot air supply	Mid-position exhausted, mechanical spring return	**574225**	**VUVG-L10-P53E-T-M7-1R8L**
		Mid-position pressurised, mechanical spring return	**574224**	**VUVG-L10-P53U-T-M7-1R8L**
In-line valve M7, with E-box H2				
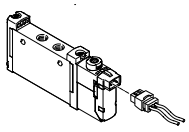	**5/2-way valve, single solenoid**			
	Internal pilot air supply	Pneumatic/mechanical spring return	**577333**	**VUVG-L10-M52-RT-M7-1H2L-W1**
		Mechanical spring return	**578163**	**VUVG-L10-M52-MT-M7-1H2L-W1**
	5/2-way valve, double solenoid			
	Internal pilot air supply		**577332**	**VUVG-L10-B52-T-M7-1H2L-W1**

Ordering data

Ordering data

	Description		Part no.	Type
In-line valve M7, for battery manufacturing				
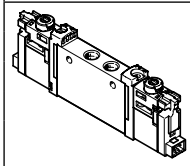	**2x 3/2-way valve**			
	Internal pilot air supply	Normally closed, mechanical spring return	**8164343**	**VUVG-L10-T32C-MT-M7-1H2L-F1A**
		Normally open, pneumatic spring return	**8164344**	**VUVG-L10-T32U-AT-M7-1H2L-F1A**
		Normally open, mechanical spring return	**8164345**	**VUVG-L10-T32U-MT-M7-1H2L-F1A**
		1x normally open, 1x normally closed, pneumatic spring return	**8154346**	**VUVG-L10-T32H-AT-M7-1H2L-F1A**
		1x normally open, 1x normally closed, mechanical spring return	**8164347**	**VUVG-L10-T32H-MT-M7-1H2L-F1A**
	External pilot air supply	Normally closed, pneumatic spring return	**8164352**	**VUVG-L10-T32C-AZT-M7-1H2L-F1A**
		Normally closed, mechanical spring return	**8164353**	**VUVG-L10-T32C-MZT-M7-1H2L-F1A**
		Normally open, pneumatic spring return	**8164354**	**VUVG-L10-T32U-AZT-M7-1H2L-F1A**
		Normally open, mechanical spring return	**8164355**	**VUVG-L10-T32U-MZT-M7-1H2L-F1A**
		1x normally open, 1x normally closed, pneumatic spring return	**8164356**	**VUVG-L10-T32H-AZT-M7-1H2L-F1A**
		1x normally open, 1x normally closed, mechanical spring return	**8164357**	**VUVG-L10-T32H-MZT-M7-1H2L-F1A**
	5/2-way valve, single solenoid			
	Internal pilot air supply	Mechanical spring return	**8164348**	**VUVG-L10-M52-MT-M7-1H2L-F1A**
	External pilot air supply	Pneumatic/mechanical spring return	**8164358**	**VUVG-L10-M52-RZT-M7-1H2L-F1A**
		Mechanical spring return	**8164359**	**VUVG-L10-M52-MZT-M7-1H2L-F1A**
	5/2-way valve, double solenoid			
	External pilot air supply		**8164360**	**VUVG-L10-B52-ZT-M7-1H2L-F1A**
	5/3-way valve			
	Internal pilot air supply	Mid-position closed	**8164349**	**VUVG-L10-P53C-T-M7-1H2L-F1A**
		Mid-position exhausted	**8164350**	**VUVG-L10-P53E-T-M7-1H2L-F1A**
		Mid-position pressurised	**8164351**	**VUVG-L10-P53U-T-M7-1H2L-F1A**
	External pilot air supply	Mid-position closed	**8164361**	**VUVG-L10-P53C-ZT-M7-1H2L-F1A**
		Mid-position exhausted	**8164362**	**VUVG-L10-P53E-ZT-M7-1H2L-F1A**
		Mid-position pressurised	**8164363**	**VUVG-L10-P53U-ZT-M7-1H2L-F1A**

Manifold assembly

In-line valves for manifold assembly

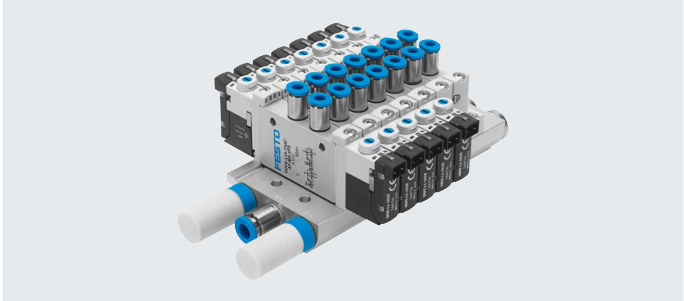

Dimensions Download CAD data ➔ www.festo.com

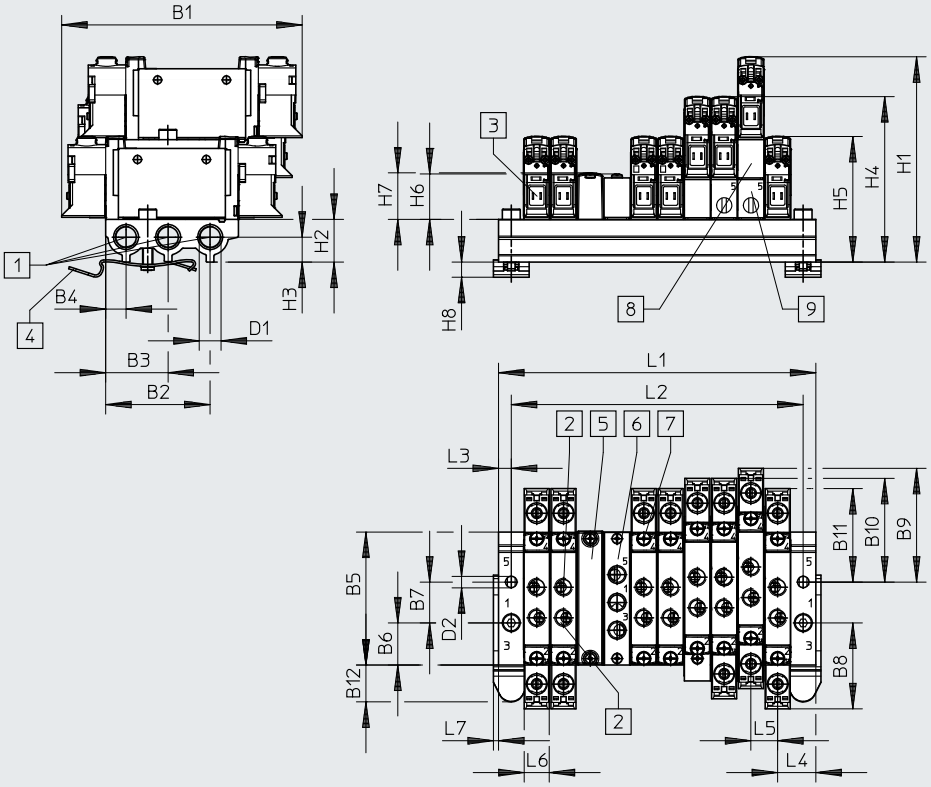

Note

More dimensions for E-boxes
a page 115

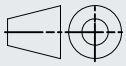

[1] Ports 1, 3 and 5: G1/8
[2] Ports 1, 2, 3, 4 and 5 on the valve: M7 or M5
[3] Electrical connection for E-boxes and accessories
[4] DIN rail mounting (two M4x20 screws are required for mounting)
[5] Cover plate
[6] Supply plate
[7] Valves/cover plate mounting on manifold rail: thread M2
[8] Vertical pressure supply plate
[9] Vertical pressure exhaust plate

Type	B1	B2	B3	B4	B5	B6	B7	B8	B9	B10	B11	B12	D1	D2
VABML-L1-10S-G18	94.3	41	24.5	8	52.1	16.5	16	33.7	44.6	40.7	36.7	14.4	G1/8	4.5

Type	D5	H1	H2	H3	H4	H5	H6	H7	H8	L3	L4	L5	L6	L7
VABML-L1-10S-G18	8	80.6	16.8	9.8	64.9	49.3	17.8	18	5.9	5	15	10.5	10.3	2

Valve positions	2	3	4	5	6	7	8	9	10	12	14	16	22
L1	40.5	51	61.5	72	82.5	93	103.5	114	124.5	145.5	166.5	187.5	250.5
L2	30.5	41	51.5	62	72.5	83	93.5	104	114.5	135.5	156.5	177.5	240.5
VABM weight [g]	63	78	93	108	123	138	153	168	183	213	243	273	363

Ordering data

Technical data – Manifold rails

	Connection	CRC	Material2)	Operating pressure		Max. tightening torque for mounting [Nm]		
	1, 3, 5			[MPa]	[bar]	Valve	DIN rail	Wall
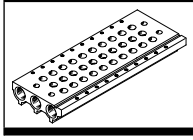	G1/8	2[1)]	Wrought aluminium alloy	0.15 ... 0.8	1.5 ... 8	0.45	1.5	3

1) Corrosion resistance class CRC 2 to Festo standard FN 940070
Moderate corrosion stress. Indoor applications in which condensation can occur. External visible parts with primarily decorative surface requirements that are in direct contact with a normal industrial environment.

2) Information on materials: RoHS-compliant.

Ordering data – Manifold rail

	Description		Part no.	Type
Manifold rail for in-line valve (manifold assembly)				
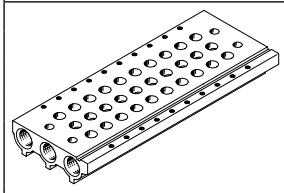	For size M5/M7	2 valve positions	**566558**	**VABM-L1-10S-G18-2**
		3 valve positions	**566559**	**VABM-L1-10S-G18-3**
		4 valve positions	**566560**	**VABM-L1-10S-G18-4**
		5 valve positions	**566561**	**VABM-L1-10S-G18-5**
		6 valve positions	**566562**	**VABM-L1-10S-G18-6**
		7 valve positions	**566563**	**VABM-L1-10S-G18-7**
		8 valve positions	**566564**	**VABM-L1-10S-G18-8**
		9 valve positions	**566565**	**VABM-L1-10S-G18-9**
		10 valve positions	**566566**	**VABM-L1-10S-G18-10**
		12 valve positions	**566567**	**VABM-L1-10S-G18-12**
		14 valve positions	**566568**	**VABM-L1-10S-G18-14**
		16 valve positions	**566569**	**VABM-L1-10S-G18-16**

Ordering data

Ordering data – Accessories

	Description			Part no.	Type
Cover plate					Datasheets a Internet: vabb
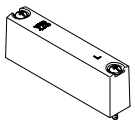	For valve position on manifold rail, including screws and seal		–	**566462**	**VABB-L1-10-S**
			Suitable for battery manufacturing	**8168538**	**VABB-L1-10-F1A**
Separator					Datasheets a Internet: vabd
	For creating pressure zones			**569995**	**VABD-8-B**
Supply plate					Datasheets a Internet: vabf
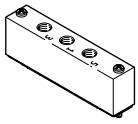	For valve position (in-line valves M5) on manifold rail, including screws and seal		–	**569991**	**VABF-L1-10-P3A4-M5**
			Suitable for battery manufacturing	**8163542**	**VABF-L1-10-P3A4-M5-F1A**
	For valve position (in-line valves M7) on manifold rail, including screws and seal		–	**569992**	**VABF-L1-10-P3A4-M7**
			Suitable for battery manufacturing	**8163543**	**VABF-L1-10-P3A4-M7-F1A**
Seals					Datasheets a Internet: vabd
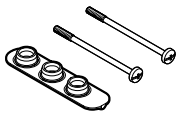	**In-line valves VUVG-LK**				
	For in-line valves M5	Delivery quantity: 10 sets (each with 2 screws and 1 seal)	–	**8043718**	**VABD-L1-10XK-S-M5-S**
			Suitable for battery manufacturing	**8168885**	**VABD-L1-10XK-S-M5-F1A**
	For in-line valves M7		–	**8043719**	**VABD-L1-10XK-S-M7-S**
			Suitable for battery manufacturing	**8168884**	**VABD-L1-10XK-S-M7-F1A**
	In-line valves VUVG-L				
	For in-line valves M5	Delivery quantity: 10 sets (each with 2 screws and 1 seal)	–	**566672**	**VABD-L1-10X-S-M5**
			Suitable for battery manufacturing	**8168587**	**VABD-L1-10X-S-M5-F1A**
	For in-line valves M7		–	**566673**	**VABD-L1-10X-S-M7**
			Suitable for battery manufacturing	**8168588**	**VABD-L1-10X-S-M7-F1A**
Vertical pressure supply plate					
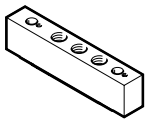	Pneumatic connection 1: M7		Terminal code CP	**574592**	**VABF-L1-P3A3-M7**
Vertical pressure exhaust plate					
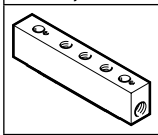	Pneumatic connection 3, 5: M7		Terminal code CR	**574594**	**VABF-L1-P7A13-M7**

Datasheet

Function
2x 3/2C
5/2-way, single solenoid
5/2-way, double solenoid valve

Circuit diagrams a Page 14

- Size 14 mm
- Flow rate
  570 ... 660 l/min
- Voltage
  24 V DC

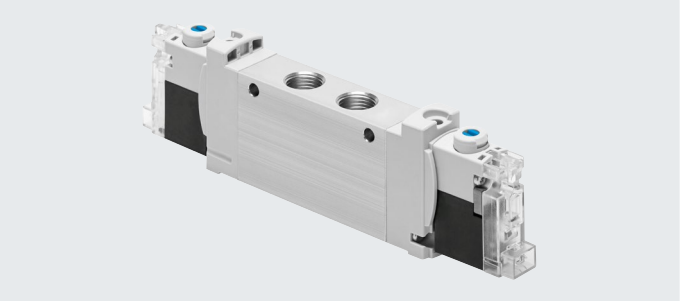

General technical data VUVG-LK					
Valve function			T32-A	M52-A	B52
Normal position			C1)	–	–
Stable position			Monostable		Bistable
Pneumatic spring return			Yes	Yes	–
Design			Piston spool		
Sealing principle			Soft		
Actuation type			Electrical		
Type of control			Piloted		
Pilot air supply			Internal		
Exhaust air function			Can be throttled		
Manual override			Non-detenting, detenting		
Type of mounting			Optionally via through-holes2) or on manifold rail		
Mounting position			Any		
Standard nominal flow rate		[l/min]	570	660	660
Switching time on/off		[ms]	13/20	14/24	–
Switching time changeover		[ms]	–		8
Size		[mm]	14		
Connection	2, 4		G1/8		
Product weight		[g]	75	65	85
Corrosion resistance class CRC3)			0		
Certificate-issuing authority			UL MH19482		
Certification			c UL us – Recognized (OL)		

1) C = Normally closed
2) If several valves are to be screwed together via the through-holes to form a block, a minimum distance of 0.3 mm must be ensured by inserting spacers
3) More information www.festo.com/x/topic/crc

Safety characteristics		
Max. positive test pulse with logic 0	[µs]	1600
Max. negative test pulse with logic 1	[µs]	3000
Shock resistance		Shock test with severity level 1 to FN 942017-5 and EN 60068-2-27
Vibration resistant		Transport application test with severity level 1 to FN 942017-4 and EN 60068-2-6

Datasheet

Operating and environmental conditions				
Valve function		T32-A1)	M52-A1)	B52
Operating medium		Compressed air to ISO 8573-2010 [7:4:4]		
Note on the operating/pilot medium		Lubricated operation possible (in which case lubricated operation will always be required)		
Operating pressure	[MPa]	0.15 ... 0.7	0.25 ... 0.7	0.15 ... 0.7
	[bar]	1.5 ... 7	2.5 ... 7	1.5 ... 7
Ambient temperature	[°C]	–5 ... +50		
Temperature of medium	[°C]	–5 ... +50		

1) Pneumatic spring

Electrical data		
Electrical connection		Via E-box a page 113
Operating voltage	[V DC]	5, 12, 24 ±10%
Power	[W]	1, reduced to 0.35 with holding current reduction
Duty cycle	[%]	100
Degree of protection to EN 60529		IP40 (with plug socket), IP65 (with M8)

Information on materials	
Housing	Wrought aluminium alloy
Seals	HNBR, NBR
Note on materials	RoHs-compliant
LABS (PWIS) conformity	VDMA24364-Zone III

Pin assignment for E-box			
	Pin		Description
Rectangular plug, connection pattern H			
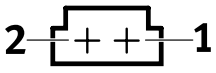	1	+ or –	Protective circuit without holding current reduction
	2	+ or –	
Round plug, M8, 3-pin			
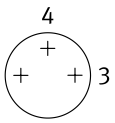	1	Not used	Protective circuit without holding current reduction
	3	+ or –	
	4	+ or –	

Protective circuit without holding current reduction

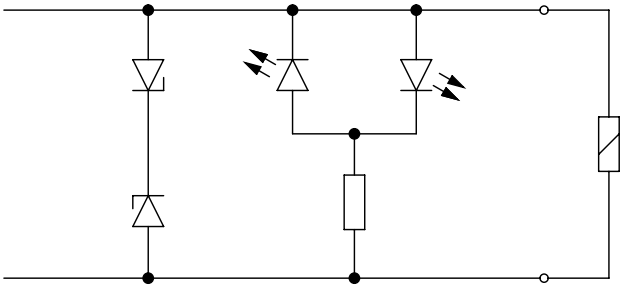

The solenoid coils have a protective circuit to arrest sparks and protect against polarity reversal.

Datasheet

Dimensions Download CAD data ➔ www.festo.com

2x 3/2-way, 5/2-way valve, double solenoid

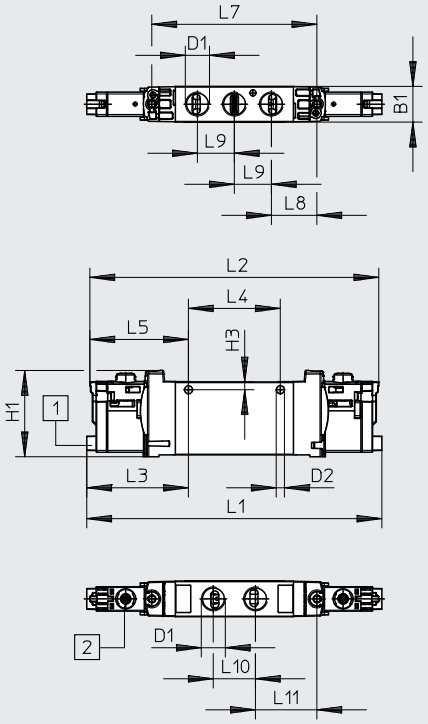

5/2-way valve, single solenoid

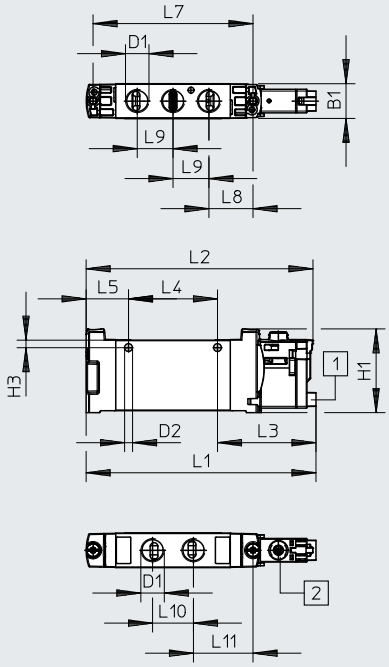

Note

More dimensions for E-boxes a page 115

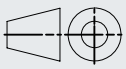

[1] Horizontal electrical connection [2] Manual override

Type	B1	D1	D2	H1	H3	L1	L2	L3	L4	L5
VUVG-LK14-T32C...-G18...	14.4	G1/8	3.3	34.8	3.2	118.9	116.4	41	37	39.7
VUVG-LK14-B52...-G18...										
VUVG-LK14-M52...-G18...						95.6	94.4			17.7

Type	L7	L8	L9	L10	L11
VUVG-LK14-T32C...-G18...	66.5	18.4	14.9	17	24.8
VUVG-LK14-B52...-G18...					
VUVG-LK14-M52...-G18...					

Ordering data

★ Core Range

Ordering data

	Description		Part no.	Type
In-line valve G1/8, with E-box R8				
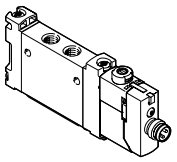	**2x 3/2-way valve**			
	Internal pilot air supply	Normally closed, pneumatic spring return	**8042566**	**VUVG-LK14-T32C-AT-G18-1R8L-S**
	5/2-way valve, single solenoid			
	Internal pilot air supply	Pneumatic spring return	**8042567**	**VUVG-LK14-M52-AT-G18-1R8L-S**
	5/2-way valve, double solenoid			
	Internal pilot air supply		**8042568**	**VUVG-LK14-B52-T-G18-1R8L-S**
In-line valve G1/8, with E-box H2				
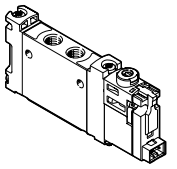	**2x 3/2-way valve**			
	Internal pilot air supply	Normally closed, pneumatic spring return	**8042562**	**VUVG-LK14-T32C-AT-G18-1H2L-S**
	5/2-way valve, single solenoid			
	Internal pilot air supply	Pneumatic spring return	**8042563**	**VUVG-LK14-M52-AT-G18-1H2L-S**
	5/2-way valve, double solenoid			
	Internal pilot air supply		**8042564**	**VUVG-LK14-B52-T-G18-1H2L-S**

Ordering data

	Description		Part no.	Type
In-line valve G1/8, for battery manufacturing				
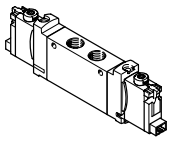	**2x 3/2-way valve**			
	Internal pilot air supply	Normally closed, pneumatic spring return	**8173205**	**VUVG-LK14-T32C-AT-G18-1H2L-F1A**
	5/2-way valve, single solenoid			
	Internal pilot air supply	Pneumatic spring return	**8173206**	**VUVG-LK14-M52-AT-G18-1H2L-F1A**
	5/2-way valve, double solenoid			
	Internal pilot air supply		**8173207**	**VUVG-LK14-B52-T-G18-1H2L-F1A**

Datasheet

Function
2x 3/2C, 2x 3/2U, 2x 3/2H
5/2-way, single solenoid
5/2-way, double solenoid valve
5/3C, 5/3U, 5/3E

Circuit diagrams a Page 14

- Size 14 mm
- Flow rate
  480 ... 780 l/min
- Voltage VUVG-...
  5, 12 and 24 V DC
  24, 110 and 230 V AC
- Voltage VUVG-...-P1
  12 and 24 V DC
  24, 110 and 230 V AC

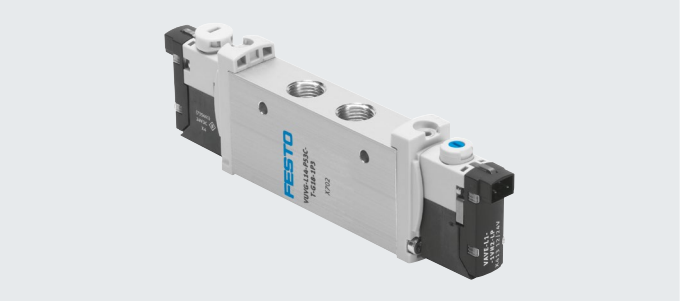

General technical data VUVG-L

Valve function			T32-A			T32-M			M52-A	B52	M52-M	P53		
Normal position			C1)	U2)	H4)	C1)	U2)	H4)	–	–	–	C1)	U2)	E3)
Stable position			Monostable							Bistable	Monostable			
Pneumatic spring return			Yes			No			Yes	–	No	–		
Mechanical spring return			No			Yes			No	–	Yes	Yes		
Vacuum operation at port 1			No			Only with external pilot air supply								
Size		[mm]	14											
Design			Piston spool											
Sealing principle			Soft											
Actuation type			Electrical											
Type of control			Piloted											
Pilot air supply			Internal or external											
Exhaust air function			Can be throttled											
Manual override	VUVG-...		Choice of non-detenting, covered, non-detenting/detenting or detenting											
	VUVG-...-P1		Non-detenting, non-detenting/detenting											
Type of mounting			Optionally via through-holes5) or on manifold rail											
Mounting position			Any											
Nominal width		[mm]	4.6			4.3			5.6	5.6	5.6	5.6		
Standard nominal flow rate		[l/min]	560	600	590	550	500	500	780	780	780	650	560	
Flow rate on manifold rail		[l/min]	560	580		520	480	480	680	700	700	620	560	
Switching time														
VUVG-...	On/off	[ms]	9/25			12/18			14/22	–	13/40	12/40		
	Changeover	[ms]	–							8	–	20		
VUVG-...-P1	On/off		11/18			14/13			16/16	–	12/26	14/24		
	Changeover		–			–			–	12	–	19		
Pneumatic connection	1, 2, 3, 4, 5		G1/8											
	12/14		M5											
Certificate-issuing authority	VUVG-...-P1		UL MH19482											
Certification	VUVG-...		RCM											
	VUVG-...		c UL us – Recognized (OL)											
	VUVG-...-P1													

1) C=Normally closed/mid-position closed
2) U=Normally open/mid-position pressurised
3) E=Mid-position exhausted
4) H=2x 3/2-way valve in one housing with 1x normally closed and 1x normally open
5) If several valves are to be screwed together via the through-holes to form a block, a minimum distance of 0.3 mm must be ensured by inserting spacers.

Datasheet

General technical data VUVG-L								
Valve function			T32-A	T32-M	M52-A	B52	M52-M	P53
Product weight	VUVG-...	[g]	89	80	78	89	70	89
	VUVG-...-P1	[g]	65	56	66	65	58	65
Certification for VUVG-...			c UL us – Recognized (OL)					
			RCM					
CE marking (see declaration of conformity)[1)]								
	VUVG-...		To EU EMC Directive					
	VUVG-...-P1		To EU Low Voltage Directive					
Corrosion resistance class CRC2)			2					
Certificate-issuing authority	VUVG-...-F1A		UL MH19482					

1) For information about the area of use, see the EC declaration of conformity at: www.festo.com/catalogue/... d Support/Downloads.
If the devices are subject to usage restrictions in residential, commercial or light-industrial environments, further measures for the reduction of the emitted interference may be necessary.
2) More information www.festo.com/x/topic/crc

Operating and environmental conditions								
Valve function			T32-A1)	T32-M2)	M52-A1)	B52	M52-M2)	P53
Operating medium			Compressed air to ISO 8573-2010 [7:4:4]					
Operating pressure	Internal	[MPa]	0.15 ... 0.8	0.3 ... 0.8	0.25 ... 0.8	0.15 ... 0.8	0.3 ... 0.8	0.3 ... 0.8
		[bar]	1.5 ... 8	3 ... 8	2.5 ... 8	1.5 ... 8	3 ... 8	3 ... 8
	External VUVG-...	[MPa]	0.15 ... 1	–0.09 ... 1				
		[bar]	1.5... 10	–0.9... 10				
Pilot pressure3)	Internal	[MPa]	0.15 ... 0.8	0.35 ... 0.8	0.25 ... 0.8	0.15 ... 0.8	0.3 ... 0.8	0.3 ... 0.8
		[bar]	1.5 ... 8	3.5 ... 8	2.5 ... 8	1.5 ... 8	3 ... 8	3 ... 8
	External VUVG-...	[MPa]	0.15 ... 0.8	0.3 ... 0.8	0.25 ... 0.8	0.15 ... 0.8	0.3 ... 0.8	0.3 ... 0.8
		[bar]	1.5 ... 8	3 ... 8	2.5 ... 8	1.5 ... 8	3 ... 8	3 ... 8
	VUVG-...-F1A	[MPa]	0.15 ... 0.8	0.2 ... 0.8	0.25 ... 0.8	0.15 ... 0.8	0.3 ... 0.8	0.3 ... 0.8
		[bar]	1.5 ... 8	2 ... 8	2.5 ... 8	1.5 ... 8	3 ... 8	3 ... 8
Ambient temperature	VUVG-...	[°C]	–5 ... +50, with holding current reduction –5 ... +60					
	VUVG-...-P1		–5 ... +50 for mounting on manifold rail, –5 ... +60					
Temperature of medium	VUVG-...	[°C]	–5 ... +50, with holding current reduction –5 ... +60					
	VUVG-...-P1		–5 ... +50, for mounting on manifold rail, –5 ... +60					
Cleanroom class			ISO class 5					

1) Pneumatic spring
2) Mechanical spring
3) Minimum pilot pressure 50% of operating pressure

Datasheet

Electrical data			
Electrical connection	VUVG-...		Plug M8x1, A-coded to EN 61076-2-104, 3-pin
	VUVG-...-P1		Via electric pilot valve
	VUVG-...-W1		Connection pattern H, horizontal connection, 2-pin, cable with open end
Pilot interface	VUVG-...-P1		To ISO 15218
Operating voltage	VUVG-...	[V DC]	5, 12 and 24 ±10%
	VUVG-...-P1	[V DC]	12 and 24 ±10%
		[V AC]	24, 110 and 230 ±10%
Power	VUVG-...	[W]	1, reduced to 0.35 with holding current reduction
	VUVG-...-P1	[W]	1.3
Duty cycle		[%]	100
Degree of protection to EN 60529	VUVG-...		IP40 (with plug socket), IP65 (with M8)
	VUVG-...-P1		IP65, with electric pilot valve and plug socket

Safety characteristics		
Max. positive test pulse with logic 0	[µs]	700
Max. negative test pulse with logic 1	[µs]	900
Shock resistance		Shock test with severity level 2 to FN 942017-5 and EN 60068-2-27
Vibration resistant		Transport application test with severity level 2 to FN 942017-4 and EN 60068-2-6

Information on materials	
Housing	Wrought aluminium alloy
Seals	HNBR, NBR
Note on materials	RoHs-compliant
LABS (PWIS) conformity	VDMA24364-B1/B2-L

Datasheet

Dimensions VUVG Download CAD data ➔ www.festo.com

2x 3/2-way, 5/2-way and 5/3-way valve

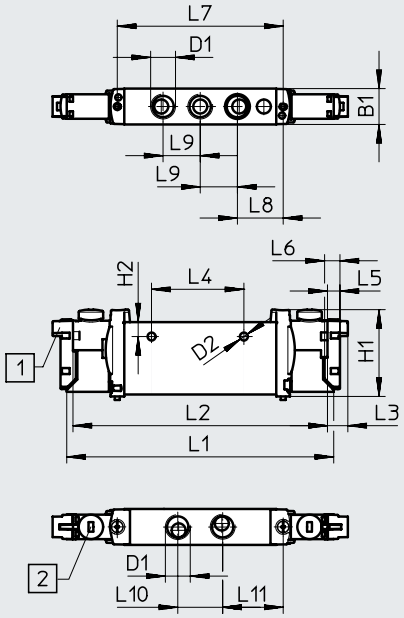

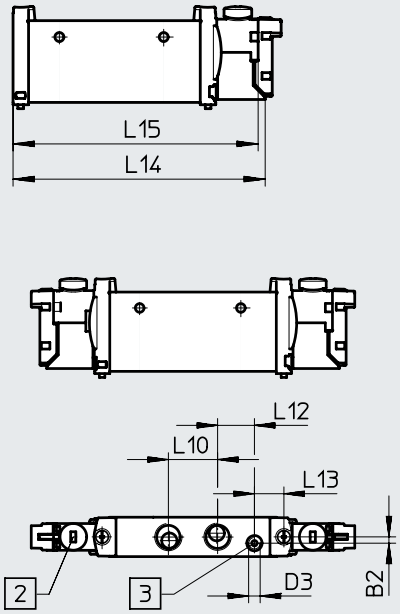

Note

More dimensions for E-boxes
a page 115

[1] Horizontal electrical connection [2] Manual override [3] Port for external pilot air supply

Type	B1	B2	D1	D2 Ø	D3	H1	H2	L1	L2	L3	L4
VUVG-L14 -...-G18...	14.4	2.3	G1/8	3.2	M5	34.8	5.8	107	102	8	37
VUVG-S14 -...-G18...											

Type	L5	L6	L7	L8	L9	L10	L11	L12	L13	L14	L15
VUVG-L14 -...-G18...	4.85	6.2	66.5	18.35	14.9	18	24.3	13.5	10.8	89.4	87
VUVG-S14 -...-G18...											

Datasheet

Dimensions VUVG-...-P1 Download CAD data ➔ www.festo.com

2x 3/2-way, 5/2-way and 5/3-way valve

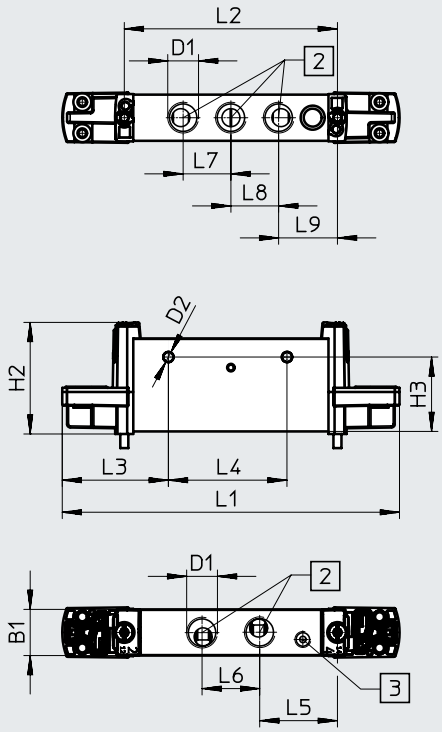

[2] Ports 1...5

5/2-way valve, single solenoid

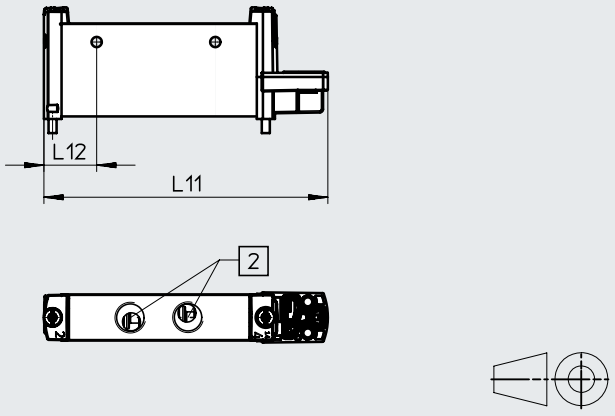

[3] Port for external pilot air supply

Type	B1	D1	D2 Ø	H2	H3	L1	L2	L3	L4	L5	L6	L7	L8	L9	L11	L12
VUVG-L14 -...-P1	14.4	G1/8	3.2	34.8	23.2	105.2	66.5	33.1	37	24.3	18	14.9	14.9	18.4	88.6	16.5

Ordering data

★ Core Range

Ordering data

	Description		Part no.	Type
In-line valve G1/8, with E-box R8				
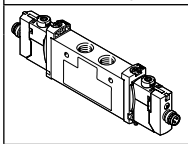	**5/3-way valve**			
	Internal pilot air supply	Mid-position closed, mechanical spring return	**574231**	**VUVG-L14-P53C-T-G18-1R8L**

Ordering data

	Description		Part no.	Type
In-line valve G1/8, without E-box				
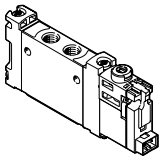	**2x 3/2-way valve**			
	Internal pilot air supply	Normally closed, pneumatic spring return	**566496**	**VUVG-L14-T32-AT-G18-P3**
		Normally open, pneumatic spring return	**566497**	**VUVG-L14-32U-AT-G18-1P3**
		1x normally open, 1x normally closed, pneumatic spring return	**566498**	**VUVG-L14-T32H-AT-G18-1P3**
		Normally closed, mechanical spring return	**574368**	**VUVG-L14-T32C-MT-G18-1P3**
		Normally open, mechanical spring return	**574369**	**VUVG-L14-T32U-MT-G18-1P3**
		1x normally open, 1x normally closed, mechanical spring return	**574370**	**VUVG-L14-T32H-MT-G18-1P3**
	External pilot air supply	Normally closed, pneumatic spring return	**566505**	**VUVG-L14-T32C-AZT-G18-1P3**
		Normally open, pneumatic spring return	**566506**	**VUVG-L14-T32U-AZT-G18-1P3**
		1x normally open, 1x normally closed, pneumatic spring return	**566507**	**VUVG-L14-T32H-AZTG18-1P3**
		Normally closed, mechanical spring return	**574372**	**VUVG-L14-T32C-MZT-G18-1P3**
		Normally open, mechanical spring return	**574373**	**VUVG-L14-T32U-MZT-G18-1P3**
		Normally closed, mechanical spring return	**574374**	**VUVG-L14-T32H-MZT-G18-1P3**
	5/2-way valve, single solenoid			
	Internal pilot air supply	Pneumatic spring return	**566499**	**VUVG-L14-M52-AT-G18-1P3**
		Mechanical spring return	**574371**	**VUVG-L14-M52-MT-G18-1P3**
	External pilot air supply	Pneumatic spring return	**566508**	**VUVG-L14-M52-AZT-G18-1P3**
		Mechanical spring return	**574375**	**VUVG-L14-M52-MZT-G18-1P3**
	5/2-way valve, double solenoid			
	Internal pilot air supply		**566500**	**VUVG-L14-B52-T-G18-1P3**
	External pilot air supply		**566509**	**VUVG-L14-B52-ZT-G18-1P3**

Ordering data

Ordering data				
	Description		Part no.	Type
In-line valve G1/8, without E-box				
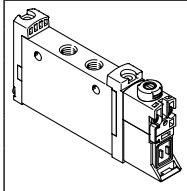	**5/3-way valve**			
	Internal pilot air supply	Mid-position closed, mechanical spring return	**566501**	**VUVG-L14-P53C-T-G18-1P3**
		Mid-position exhausted, mechanical spring return	**566502**	**VUVG-L14-P53E-T-G18-1P3**
		Mid-position pressurised, mechanical spring return	**566503**	**VUVG-L14-P53U-T-G18-1P3**
	External pilot air supply	Mid-position closed, mechanical spring return	**566510**	**VUVG-L14-P53C-ZT-G18-1P3**
		Mid-position exhausted, mechanical spring return	**566511**	**VUVG-L14-P53E-ZT-G18-1P3**
		Mid-position pressurised, mechanical spring return	**566512**	**VUVG-L14-P53U-ZT-G18-1P3**
In-line valve G1/8, with E-box R8				
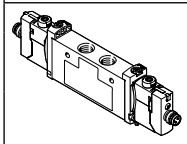	**2x 3/2-way valve**			
	Internal pilot air supply	Normally closed, pneumatic spring return	**574226**	**VUVG-L14-T32C-AT-G18-1R8L**
		Normally open, pneumatic spring return	**574227**	**VUVG-L14-T32U-AT-G18-1R8L**
		1x normally open, 1x normally closed, pneumatic spring return	**574228**	**VUVG-L14-T32H-AT-G18-1R8L**
		Normally closed, mechanical spring return	**8031504**	**VUVG-L14-T32C-MT-G18-1R8L**
		Normally open, mechanical spring return	**8031505**	**VUVG-L14-T32U-MT-G18-1R8L**
		1x normally open, 1x normally closed, mechanical spring return	**8031506**	**VUVG-L14-T32H-MT-G18-1R8L**
	5/2-way valve, single solenoid			
	Internal pilot air supply	Pneumatic spring return	**574229**	**VUVG-L14-M52-AT-G18-1R8L**
		Mechanical spring return	**8031508**	**VUVG-L14-M52-MT-G18-1R8L**
	5/2-way valve, double solenoid			
	Internal pilot air supply		**574230**	**VUVG-L14-B52-T-G18-1R8L**
	5/3-way valve			
	Internal pilot air supply	Mid-position exhausted, mechanical spring return	**574233**	**VUVG-L14-P53E-T-G18-1R8L**
		Mid-position pressurised, mechanical spring return	**574232**	**VUVG-L14-P53U-T-G18-1R8L**
In-line valve G1/8, with E-box H2				
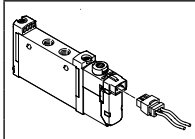	**2x 3/2-way valve**			
	Internal pilot air supply	Normally closed, pneumatic spring return	**577321**	**VUVG-L14-T32C-AT-G18-1H2L-W1**
	5/2-way valve, single solenoid			
	Internal pilot air supply	Pneumatic spring return	**576256**	**VUVG-L14-M52-AT-G18-1H2L-W1**
		Mechanical spring return	**578164**	**VUVG-L14-M52-MT-G18-1H2L-W1**
	5/2-way valve, double solenoid			
	Internal pilot air supply		**577319**	**VUVG-L14-B52-T-G18-1H2L-W1**
Semi in-line valve G1/8, with E-box H2				
5/2-way valve, single solenoid				
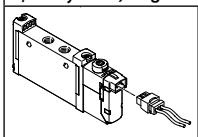	Internal pilot air supply	Pneumatic spring return	**577325**	**VUVG-S14-M52-AT-G18-1H2L-W1**

Ordering data

Ordering data

	Description		Part no.	Type
In-line valve G1/8, for battery manufacturing				
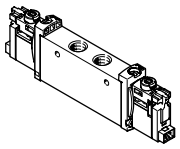	**2x 3/2-way valve**			
	Internal pilot air supply	Normally closed, mechanical spring return	**8164552**	**VUVG-L14-T32C-MT-G18-1H2L-F1A**
		Normally open, pneumatic spring return	**8164553**	**VUVG-L14-T32U-AT-G18-1H2L-F1A**
		Normally open, mechanical spring return	**8164554**	**VUVG-L14-T32U-MT-G18-1H2L-F1A**
		1x normally open, 1x normally closed, pneumatic spring return	**8164555**	**VUVG-L14-T32H-AT-G18-1H2L-F1A**
		1x normally open, 1x normally closed, mechanical spring return	**8164556**	**VUVG-L14-T32H-MT-G18-1H2L-F1A**
	External pilot air supply	Normally closed, pneumatic spring return	**8164561**	**VUVG-L14-T32C-AZT-G18-1H2L-F1A**
		Normally closed, mechanical spring return	**8164562**	**VUVG-L14-T32C-MZT-G18-1H2L-F1A**
		Normally open, pneumatic spring return	**8164563**	**VUVG-L14-T32U-AZT-G18-1H2L-F1A**
		Normally open, mechanical spring return	**8164564**	**VUVG-L14-T32U-MZT-G18-1H2L-F1A**
		1x normally open, 1x normally closed, pneumatic spring return	**8164565**	**VUVG-L14-T32H-AZT-G18-1H2L-F1A**
		1x normally open, 1x normally closed, mechanical spring return	**8164566**	**VUVG-L14-T32H-MZT-G18-1H2L-F1A**
	5/2-way valve, single solenoid			
	Internal pilot air supply	Mechanical spring return	**8164557**	**VUVG-L14-M52-MT-G18-1H2L-F1A**
	External pilot air supply	Pneumatic spring return	**8164567**	**VUVG-L14-M52-AZT-G18-1H2L-F1A**
		Mechanical spring return	**8164568**	**VUVG-L14-M52-MZT-G18-1H2L-F1A**
	5/2-way valve, double solenoid			
	External pilot air supply		**8164569**	**VUVG-L14-B52-ZT-G18-1H2L-F1A**
	5/3-way valve			
	Internal pilot air supply	Mid-position closed	**8164558**	**VUVG-L14-P53C-T-G18-1H2L-F1A**
		Mid-position exhausted	**8164559**	**VUVG-L14-P53E-T-G18-1H2L-F1A**
		Mid-position pressurised	**8164560**	**VUVG-L14-P53U-T-G18-1H2L-F1A**
	External pilot air supply	Mid-position closed	**8164570**	**VUVG-L14-P53C-ZT-G18-1H2L-F1A**
		Mid-position exhausted	**8164571**	**VUVG-L14-P53E-ZT-G18-1H2L-F1A**
		Mid-position pressurised	**8164572**	**VUVG-L14-P53U-ZT-G18-1H2L-F1A**

Ordering data

Ordering data

	Description		Part no.	Type
In-line valve G1/8, to ISO 15218				
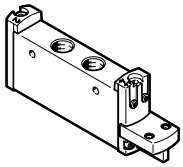	**2x 3/2-way valve**			
	Internal pilot air supply	Normally closed, pneumatic spring return	**8033523**	**VUVG-L14-T32C-A-G18-P1**
		Normally open, pneumatic spring return	**8033524**	**VUVG-L14-T32U-A-G18-P1**
		1x normally open, 1x normally closed, pneumatic spring return	**8033525**	**VUVG-L14-T32H-A-G18-P1**
		Normally closed, mechanical spring return	**8033526**	**VUVG-L14-T32C-M-G18-P1**
		Normally open, mechanical spring return	**8033527**	**VUVG-L14-T32U-M-G18-P1**
		1x normally open, 1x normally closed, mechanical spring return	**8033528**	**VUVG-L14-T32H-M-G18-P1**
	5/2-way valve, single solenoid			
	Internal pilot air supply	Pneumatic spring return	**8033529**	**VUVG-L14-M52-A-G18-P1**
		Mechanical spring return	**8033530**	**VUVG-L14-M52-M-G18-P1**
	5/2-way valve, double solenoid			
	Internal pilot air supply	–	**8033531**	**VUVG-L14-B52-G18-P1**
	5/3-way valve			
	Internal pilot air supply	Mid-position closed, mechanical spring return	**8033532**	**VUVG-L14-P53C-G18-P1**
		Mid-position exhausted, mechanical spring return	**8033533**	**VUVG-L14-P53E-G18-P1**
		Mid-position pressurised, mechanical spring return	**8033534**	**VUVG-L14-P53U-G18-P1**

Manifold assembly

In-line valves for manifold assembly

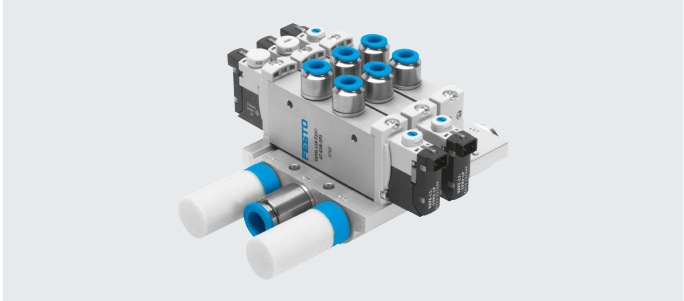

Dimensions Download CAD data ➔ www.festo.com

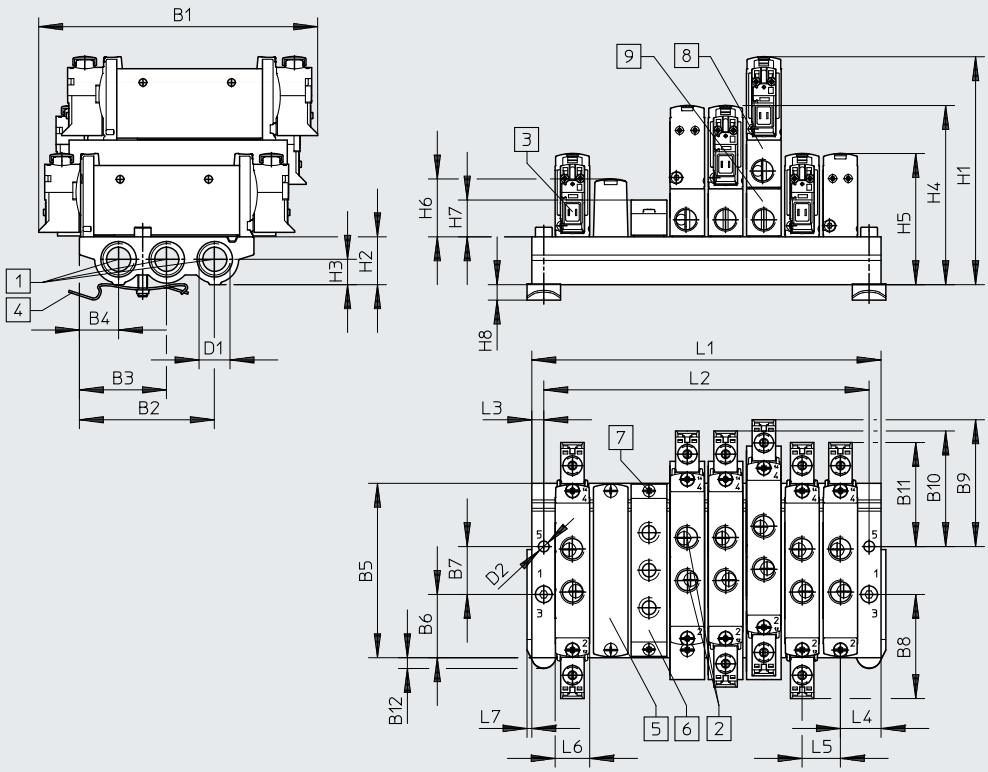

Note

More dimensions for E-boxes
a page 115

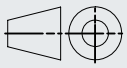

[1] Ports 1, 3 and 5: G1/4 (at both ends)
[2] Ports 1, 2, 3, 4 and 5 on the valve: G1/8
[3] Electrical connection for E-boxes and accessories
[4] DIN rail mounting (two M4x25 screws are required for mounting)
[5] Cover plate
[6] Supply plate, ports 1, 3 and 5: G1/8
[7] Valves/cover plate mounting on manifold rail: thread M2.5
[8] Vertical pressure supply plate
[9] Vertical pressure exhaust plate

Type	B1	B2	B3	B4	B5	B6	B7	B8	B9	B10	B11	B12	D1	D2
VABM-L1-14S-G14	116.6	56.6	36.5	16.4	72.9	26.5	20	43.5	53.1	48.3	43.5	4.5	G1/4	4.5

Type	H1	H2	H3	H4	H5	H6	H7	H8	L3	L4	L5	L6	L7
VABM-L1-14S-G14	95.3	20	10.6	74.9	54.8	23.9	15.4	6.5	5	17	16	14.5	2

Valve positions	2	3	4	5	6	7	8	9	10	12	14	16	22
L1	50	66	82	98	114	130	146	162	178	210	242	274	306
L2	40	56	72	88	104	120	136	152	168	200	232	264	296
VABM weight [g]	118	159	200	241	282	323	364	405	446	528	610	692	938

Ordering data

Technical data – Manifold rails

	Connection 1, 3, 5	CRC	Material2)	Operating pressure [MPa]	[bar]	Max. tightening torque for mounting [Nm] Valve	DIN rail	Wall
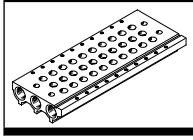	G1/4	2[1)]	Wrought aluminium alloy	0.15 ... 0.8	1.5 ... 8	0.65	1.5	3

1) More information www.festo.com/x/topic/crc
2) Information on materials: RoHS-compliant.

Ordering data – Manifold rail

	Description		Part no.	Type
Manifold rail for in-line valves (manifold assembly)				
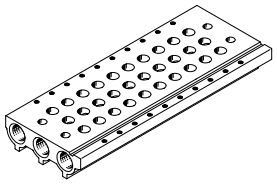	For size G1/8	2 valve positions	**566618**	**VABM-L1-14S-G14-2**
		3 valve positions	**566619**	**VABM-L1-14S-G14-3**
		4 valve positions	**566620**	**VABM-L1-14S-G14-4**
		5 valve positions	**566621**	**VABM-L1-14S-G14-5**
		6 valve positions	**566622**	**VABM-L1-14S-G14-6**
		7 valve positions	**566623**	**VABM-L1-14S-G14-7**
		8 valve positions	**566624**	**VABM-L1-14S-G14-8**
		9 valve positions	**566625**	**VABM-L1-14S-G14-9**
		10 valve positions	**566626**	**VABM-L1-14S-G14-10**
		12 valve positions	**566627**	**VABM-L1-14S-G14-12**
		14 valve positions	**566628**	**VABM-L1-14S-G14-14**
		16 valve positions	**566629**	**VABM-L1-14S-G14-16**

Ordering data

Ordering data – Accessories

	Description			Part no.	Type
Cover plate					Datasheets a Internet: vabb
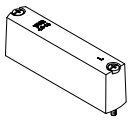	For valve position on manifold rail, including screws and seal			**569989**	**VABB-L1-14**
Separator					Datasheets a Internet: vabd
	For creating pressure zones			**569996**	**VABD-10-B**
Supply plate					Datasheets a Internet: vabf
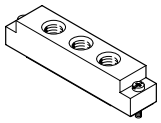	For valve position on manifold rail, including screws and seal			**569993**	**VABF-L1-14-P3A4-G18**
Seals for in-line valves					Datasheets a Internet: vabd
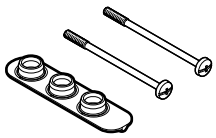	**In-line valves VUVG-LK**				
	For G1/8 in-line valves	Delivery quantity: 10 sets (each with 2 screws and 1 seal)	–	**8043720**	**VABD-L1-14XK-S-G18-S**
			Suitable for battery manufacturing	**8168886**	**VABD-L1-14XK-S-G18-F1A**
	In-line valves VUVG-L				
	For G1/8 in-line valves	Delivery quantity: 10 sets (each with 2 screws and 1 seal)	–	**566675**	**VABD-L1-14X-S-G18**
			Suitable for battery manufacturing	**8168589**	**VABD-L1-14X-S-G18-F1A**
Vertical pressure supply plate					
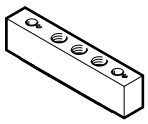	Pneumatic connection 1: G1/8		Terminal code CP	**574593**	**VABF-L1-P3A3-G18**
Vertical pressure exhaust plate					
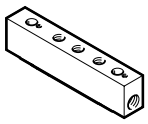	Pneumatic connection 3, 5: G1/8		Terminal code CR	**574595**	**VABF-L1-P7A13-G18**

Datasheet

Function
2x 3/2C, 2x 3/2U, 2x 3/2H
5/2-way, single solenoid
5/2-way, double solenoid valve
5/3C, 5/3U, 5/3E

Circuit diagrams a Page 14

- Size 18 mm
- Flow rate
  780 ... 1380 l/min
- Voltage
  5, 12 and 24 V DC
  24, 110 and 230 V AC
- Voltage VUVG-...-P1
  12 and 24 V DC
  24, 110 and 230 V AC



General technical data VUVG-L														
Valve function			T32-A			T32-M			M52-R	B52	M52-M	P53		
Normal position			C1)	U2)	H4)	C1)	U2)	H)4	–	–	–	C1)	U2)	E3)
Stable position			Monostable							Bistable	Monostable			
Pneumatic spring return			Yes			No			Yes5)	–	No	–		
Mechanical spring return			No			Yes			Yes5)	–	Yes	Yes		
Vacuum operation at port 1			No			Only with external pilot air supply								
Size		[mm]	18											
Design			Piston spool											
Sealing principle			Soft											
Actuation type			Electrical											
Type of control			Piloted											
Pilot air supply			Internal/external											
Exhaust air function			Can be throttled											
Manual override	VUVG-...		Choice of non-detenting, covered, non-detenting/detenting or detenting											
	VUVG-...-P1		Non-detenting, non-detenting/detenting											
Type of mounting			Optionally via through-holes6) or on manifold rail											
Mounting position			Any											
Nominal width		[mm]	5.7						6.9	7.3	6.9	6.5	6.3	
Standard nominal flow rate		[l/min]	880	970	950	870	990	920	1150	1380	1300	1200	1000	910
Flow rate on manifold rail			780	980	820	780	960	820	1300	1370	1300	1180	1220	1050
Switching time														
VUVG-...	On/off	[ms]	13/27			15/22			15/31	–	10/45	15/48		
	Changeover	[ms]	–			–			–	11	–	29		
VUVG-...P1	On/off	[ms]	13/18			16/15			16/22	–	14/26	15/32		
	Changeover	[ms]	–			–			–	12	–	21		
Pneumatic connection	1, 2, 3, 4, 5		G1/4											
	12/14		M5											
Product weight	VUVG-...	[g]	164			164			154	164	154	160		
	VUVG-...-P1	[g]	140			140			142	140	142	136		
Certificate-issuing authority	VUVG-...-P1		UL MH19482											
Certification	VUVG-...		RCM											
	VUVG-...		c UL us – Recognized (OL)											
	VUVG-...-P1													
CE marking (see declaration of conformity)7)														
	VUVG-...		To EU EMC Directive											
	VUVG-...-P1		To EU Low Voltage Directive											
Corrosion resistance class CRC8)			2											

1) C=Normally closed/mid-position closed
2) U=Normally open/mid-position pressurised
3) E=Mid-position exhausted
4) H=2x 3/2-way valve in one housing with 1x normally closed and 1x normally open
5) Combined reset method
6) If several valves are to be screwed together via the through-holes to form a block, a minimum distance of 0.3 mm must be ensured by inserting spacers.
7) For information about the area of use, see the EC declaration of conformity at: www.festo.com/catalogue/... d Support/Downloads.
   If the devices are subject to usage restrictions in residential, commercial or light-industrial environments, further measures for the reduction of the emitted interference may be necessary.
8) More information www.festo.com/x/topic/crc

Datasheet

Operating and environmental conditions								
Valve function			T32-A1)	T32-M3)	M52-R2)	B52	M52-M3)	P53
Operating medium			Compressed air to ISO 8573-2010 [7:4:4]					
Note on the operating/pilot medium			Lubricated operation possible (in which case lubricated operation will always be required)					
Operating pressure	Internal	[MPa]	0.15 ... 0.8	0.3 ... 0.8	0.25 ... 0.8	0.15 ... 0.8	0.3 ... 0.8	
		[bar]	1.5 ... 8	3 ... 8	2.5 ... 8	1.5 ... 8	3 ... 8	
	External VUVG-...	[MPa]	0.15 ... 1	–0.09 ... 1				
		[bar]	1.5 ... 10	–0.9 ... 10				
Pilot pressure4)		[MPa]	0.15 ... 0.8	0.2 ... 0.8	0.25 ... 0.8	0.15 ... 0.8	0.3 ... 0.8	
		[bar]	1.5 ... 8	2 ... 8	2.5 ... 8	1.5 ... 8	3 ... 8	
Ambient temperature	VUVG-...	[°C]	–5 ... +50, with holding current reduction –5 ... +60					
	VUVG-...-P1	[°C]	–5 ... +50 for mounting on manifold rail, –5 ... +60					
Temperature of medium	VUVG-...	[°C]	–5 ... +50, with holding current reduction –5 ... +60					
	VUVG-...-P1	[°C]	–5 ... +50 for mounting on manifold rail, –5 ... +60					
Cleanroom class			ISO class 5					

1) Pneumatic spring
2) Mixed, pneumatic/mechanical spring
3) Mechanical spring
4) Minimum pilot pressure 50% of operating pressure

Electrical data			
Electrical connection	VUVG-...		Plug M8x1, A-coded to EN 61076-2-104, 3-pin
	VUVG-...-P1		Via electric pilot valve
	VUVG-...-W1		Connection pattern H, horizontal connection, 2-pin, cable with open end
Pilot interface	VUVG-...-P1		To ISO 15218
Operating voltage	VUVG-...	[V DC]	5, 12 and 24 ±10%
	VUVG-...-P1	[V DC]	12 and 24 ±10%
		[V AC]	24, 110 and 230 ±10%
Power	VUVG-...	[W]	1, reduced to 0.35 with holding current reduction
	VUVG-...-P1	[W]	1.3
Duty cycle		[%]	100
Degree of protection to EN 60529			
	VUVG-...		IP40 (with plug socket), IP65 (with M8)
	VUVG-...-P1		IP65, with electric pilot valve and plug socket

Safety characteristics		
Max. positive test pulse with logic 0	[µs]	700
Max. negative test pulse with logic 1	[µs]	900
Shock resistance		Shock test with severity level 2 to FN 942017-5 and EN 60068-2-27
Vibration resistant		Transport application test with severity level 2 to FN 942017-4 and EN 60068-2-6

Information on materials	
Housing	Wrought aluminium alloy
Seals	HNBR, NBR
Note on materials	RoHs-compliant
LABS (PWIS) conformity	VDMA24364-B1/B2-L

Datasheet

Dimensions VUVG-... Download CAD data ➔ www.festo.com

2x 3/2-way, 5/2-way and 5/3-way valve

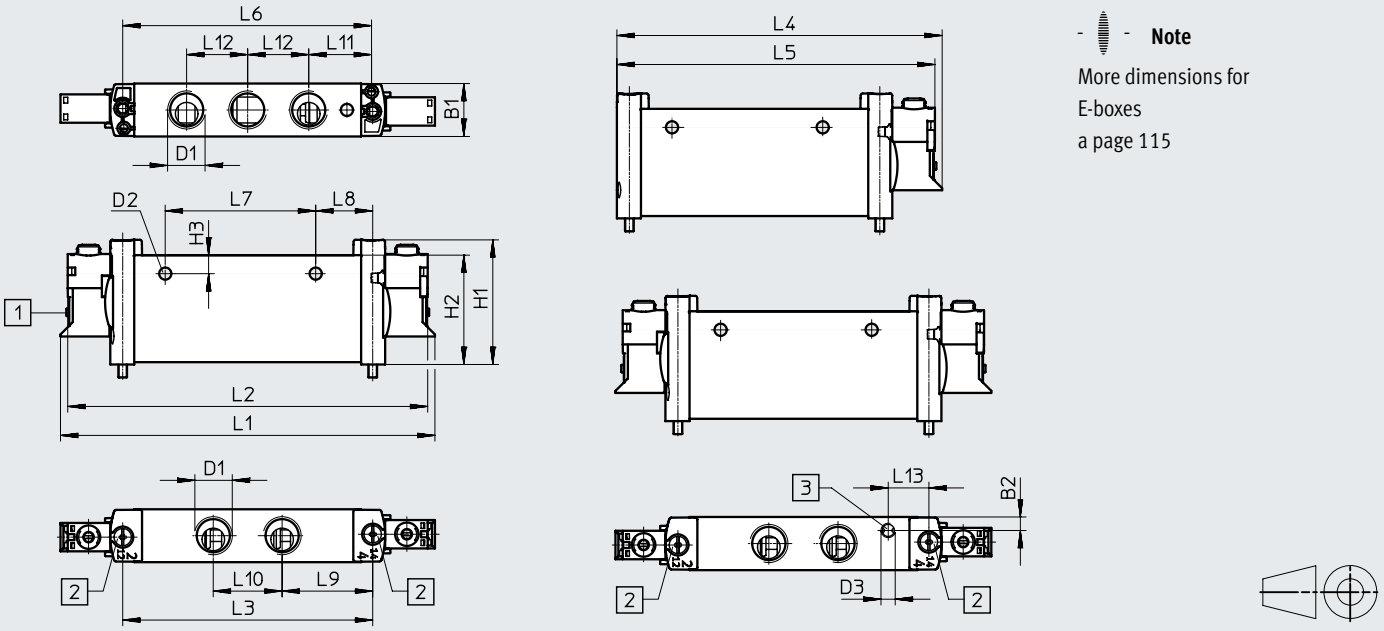

Note

More dimensions for E-boxes
a page 115

[1] Electrical connection without E-box

[2] Retaining screw

[3] Port for external pilot air supply

Type	B1	B2	D1	D2 ø	D3	H1	H2	H3	L1	L2	L3
VUVG-L18-...	18.3	4.5	G1/4	4.2	M5	43.1	37.8	6.4	129.4	124.4	86.4
VUVG-S18-...											

Type	L4	L5	L6	L7	L8	L9	L10	L11	L12	L13
VUVG-L18-...	112.2	109.7	86	52	19.7	31.3	23.8	21.7	21.1	14
VUVG-S18-...										

Datasheet

Dimensions VUVG-...-P1 Download CAD data ➔ www.festo.com

2x 3/2-way, 5/2-way and 5/3-way valve

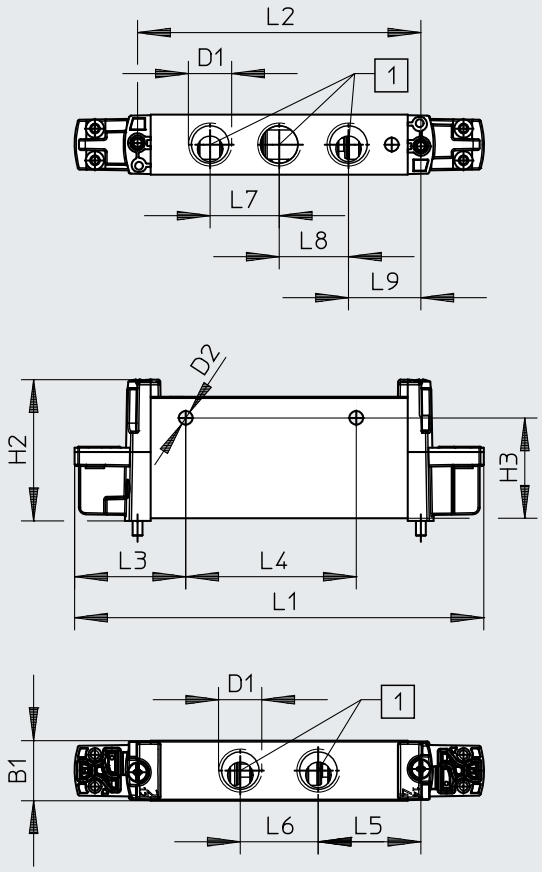

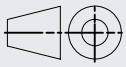

[1] Ports 1... 5

Type	B1	D1	D2	H2	H3	L1	L2	L3
VUVG-L18-...-P1	18.3	G1/4	ø 4.2	43.1	30.6	124.8	86.4	33.9

Type	L4	L5	L6	L7	L8	L9
VUVG-L18-...-P1	52	31.3	23.8	21.1	21.1	22.1

Ordering data

★ Core Range

Ordering data

	Description		Part no.	Type
In-line valve G1/4, with E-box R8				
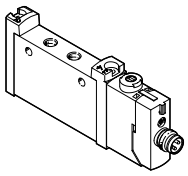	**2x 3/2-way valve**			
	Internal pilot air supply	Normally closed, pneumatic spring return	**8031525**	**VUVG-L18-T32C-AT-G14-1R8L**
	5/2-way valve, single solenoid			
	Internal pilot air supply	Pneumatic/mechanical spring return	**8031531**	**VUVG-L18-M52-RT-G14-1R8L**
		Mechanical spring return	**8031532**	**VUVG-L18-M52-MT-G14-1R8L**
	5/3-way valve			
	Internal pilot air supply	Mid-position closed, mechanical spring return	**8031534**	**VUVG-L18-P53C-T-G14-1R8L**

Ordering data

	Description		Part no.	Type
In-line valve G1/4, without E-box				
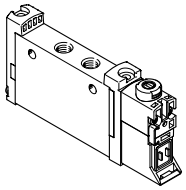	**2x 3/2-way valve**			
	Internal pilot air supply	Normally closed, pneumatic spring return	**574422**	**VUVG-L18-T32C-AT-G14-1P3**
		Normally open, pneumatic spring return	**574423**	**VUVG-L18-T32U-AT-G14-1P3**
		1x normally open, 1x normally closed, pneumatic spring return	**574424**	**VUVG-L18-T32H-AT-G14-1P3**
		Normally closed, mechanical spring return	**574425**	**VUVG-L18-T32C-MT-G14-1P3**
		Normally open, mechanical spring return	**574426**	**VUVG-L18-T32U-MT-G14-1P3**
		1x normally open, 1x normally closed, mechanical spring return	**574427**	**VUVG-L18-T32H-MT-G14-1P3**
	External pilot air supply	Normally closed, mechanical spring return	**574434**	**VUVG-L18-T32C-MZT-G14-1P3**
		Normally open, mechanical spring return	**574435**	**VUVG-L18-T32U-MZT-G14-1P3**
		1x normally open, 1x normally closed, mechanical spring return	**574436**	**VUVG-L18-T32H-MZT-G14-1P3**
	5/2-way valve, single solenoid			
	Internal pilot air supply	Pneumatic/mechanical spring return	**574428**	**VUVG-L18-M52-RT-G14-1P3**
		Mechanical spring return	**574429**	**VUVG-L18-M52-MT-G14-1P3**
	External pilot air supply	Mechanical spring return	**574438**	**VUVG-L18-M52-MZT-G14-1P3**
		Pneumatic/mechanical spring return	**574437**	**VUVG-L18-M52-RZT-G14-1P3**
	5/2-way valve, double solenoid			
	Internal pilot air supply		**574430**	**VUVG-L18-B52-T-G14-1P3**
	External pilot air supply		**574439**	**VUVG-L18-B52-ZT-G14-1P3**

Ordering data

Ordering data

	Description		Part no.	Type
In-line valve G1/4, without E-box				
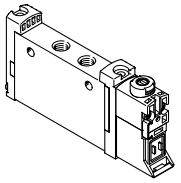	**5/3-way valve**			
	Internal pilot air supply	Mid-position closed, mechanical spring return	**574431**	**VUVG-L18-P53C-T-G14-1P3**
		Mid-position exhausted, mechanical spring return	**574432**	**VUVG-L18-P53E-T-G14-1P3**
		Mid-position pressurised, mechanical spring return	**574433**	**VUVG-L18-P53U-T-G14-1P3**
	External pilot air supply	Mid-position closed, mechanical spring return	**574440**	**VUVG-L18-P53C-ZT-G14-1P3**
		Mid-position exhausted, mechanical spring return	**574441**	**VUVG-L18-P53E-ZT-G14-1P3**
		Mid-position pressurised, mechanical spring return	**574442**	**VUVG-L18-P53U-ZT-G14-1P3**
In-line valve G1/4, with E-box R8				
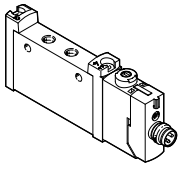	**2x 3/2-way valve**			
	Internal pilot air supply	Normally open, pneumatic spring return	**8031526**	**VUVG-L18-T32U-AT-G14-1R8L**
		1x normally open, 1x normally closed, pneumatic spring return	**8031527**	**VUVG-L18-T32H-AT-G14-1R8L**
		Normally closed, mechanical spring return	**8031528**	**VUVG-L18-T32C-MT-G14-1R8L**
		Normally open, mechanical spring return	**8031529**	**VUVG-L18-T32U-MT-G14-1R8L**
		1x normally open, 1x normally closed, mechanical spring return	**8031530**	**VUVG-L18-T32H-MT-G14-1R8L**
	5/2-way valve, double solenoid			
	Internal pilot air supply		**8031533**	**VUVG-L18-B52-T-G14-1R8L**
	5/3-way valve			
	Internal pilot air supply	Mid-position exhausted, mechanical spring return	**8031535**	**VUVG-L18-P53E-T-G14-1R8L**
		Mid-position pressurised, mechanical spring return	**8031536**	**VUVG-L18-P53U-T-G14-1R8L**
In-line valve G1/4, with E-box H2				
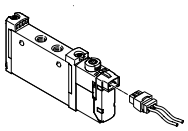	**5/2-way valve, single solenoid**			
	Internal pilot air supply	Pneumatic/mechanical spring return	**578823**	**VUVG-L18-M52-RT-G14-1H2L-W1**

Ordering data

Ordering data				
	Description		Part no.	Type
In-line valve G1/4, to ISO 15218				
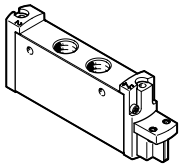	**2x 3/2-way valve**			
	Internal pilot air supply	Normally closed, pneumatic spring return	**8033547**	**VUVG-L18-T32C-A-G14-P1**
		Normally open, pneumatic spring return	**8033548**	**VUVG-L18-T32U-A-G14-P1**
		1x normally open, 1x normally closed, pneumatic spring return	**8033549**	**VUVG-L18-T32H-A-G14-P1**
		Normally closed, mechanical spring return	**8033550**	**VUVG-L18-T32C-M-G14-P1**
		Normally open, mechanical spring return	**8033551**	**VUVG-L18-T32U-M-G14-P1**
		1x normally open, 1x normally closed, mechanical spring return	**8033552**	**VUVG-L18-T32H-M-G14-P1**
	5/2-way valve, single solenoid			
	Internal pilot air supply	Pneumatic/mechanical spring return	**8033553**	**VUVG-L18-M52-R-G14-P1**
		Mechanical spring return	**8033554**	**VUVG-L18-M52-M-G14-P1**
	5/2-way valve, double solenoid			
	Internal pilot air supply		**8033555**	**VUVG-L18-B52-G14-P1**
	5/3-way valve			
	Internal pilot air supply	Mid-position closed, mechanical spring return	**8033556**	**VUVG-L18-P53C-G14-P1**
		Mid-position exhausted, mechanical spring return	**8033557**	**VUVG-L18-P53E-G14-P1**
		Mid-position pressurised, mechanical spring return	**8033558**	**VUVG-L18-P53U-G14-P1**

Ordering data				
	Description		Part no.	Type
In-line valve G1/4, for battery manufacturing				
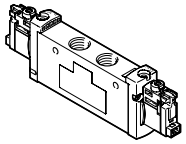	**2x 3/2-way valve**			
	Internal pilot air supply	Normally closed, pneumatic spring return	**8172829**	**VUVG-L18-T32C-AT-G14-1H2L-F1A**
		Normally closed, mechanical spring return	**8172830**	**VUVG-L18-T32C-MT-G14-1H2L-F1A**
		Normally open, pneumatic spring return	**8172831**	**VUVG-L18-T32U-AT-G14-1H2L-F1A**
		Normally closed, mechanical spring return	**8172832**	**VUVG-L18-T32U-MT-G14-1H2L-F1A**
		1x normally open, 1x normally closed, pneumatic spring return	**8172833**	**VUVG-L18-T32H-AT-G14-1H2L-F1A**
		1x normally open, 1x normally closed, mechanical spring return	**8172834**	**VUVG-L18-T32H-MT-G14-1H2L-F1A**
	External pilot air supply	Normally closed, mechanical spring return	**8172841**	**VUVG-L18-T32C-MZT-G14-1H2L-F1A**
		Normally open, pneumatic spring return	**8172842**	**VUVG-L18-T32U-MZT-G14-1H2L-F1A**
		1x normally open, 1x normally closed, mechanical spring return	**8172843**	**VUVG-L18-T32H-MZT-G14-1H2L-F1A**
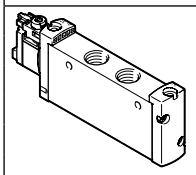	**5/2-way valve, single solenoid**			
	Internal pilot air supply	Pneumatic/mechanical spring return	**8172835**	**VUVG-L18-M52-RT-G14-1H2L-F1A**
		Mechanical spring return	**8172836**	**VUVG-L18-M52-MT-G14-1H2L-F1A**
	External pilot air supply	Pneumatic/mechanical spring return	**8172844**	**VUVG-L18-M52-RZT-G14-1H2L-F1A**
		Mechanical spring return	**8172845**	**VUVG-L18-M52-MZT-G14-1H2L-F1A**
	5/2-way valve, double solenoid			
	Internal pilot air supply		**8172837**	**VUVG-L18-B52-T-G14-1H2L-F1A**
	External pilot air supply		**8172846**	**VUVG-L18-B52-ZT-G14-1H2L-F1A**
	5/3-way valve			
	Internal pilot air supply	Mid-position closed	**8172838**	**VUVG-L18-P53C-T-G14-1H2L-F1A**
		Mid-position exhausted	**8172839**	**VUVG-L18-P53E-T-G14-1H2L-F1A**
		Mid-position pressurised	**8172840**	**VUVG-L18-P53U-T-G14-1H2L-F1A**
	External pilot air supply	Mid-position closed	**8172847**	**VUVG-L18-P53C-ZT-G14-1H2L-F1A**
		Mid-position exhausted	**8172848**	**VUVG-L18-P53E-ZT-G14-1H2L-F1A**
		Mid-position pressurised	**8172849**	**VUVG-L18-P53U-ZT-G14-1H2L-F1A**

Manifold assembly

In-line valves for
Manifold assembly

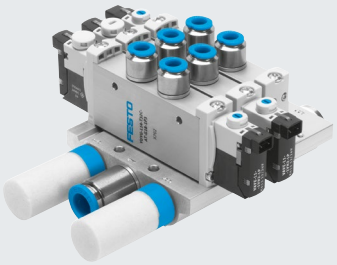

Dimensions Download CAD data ➔ www.festo.com

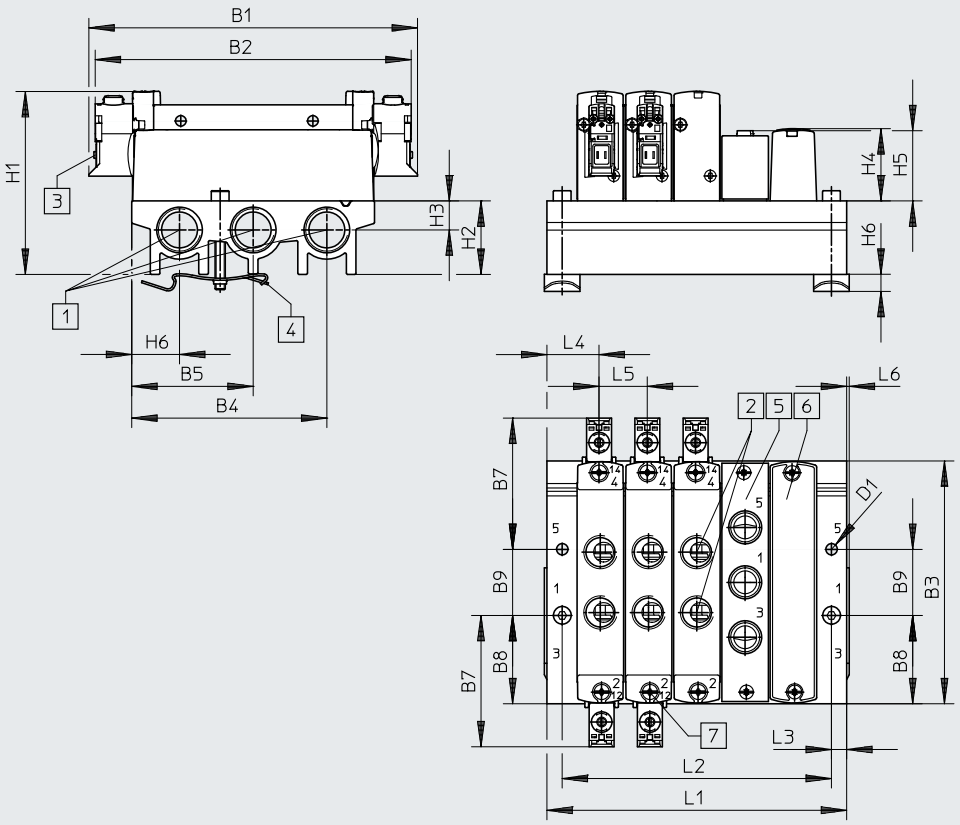

Note

More dimensions for
E-boxes
a page 115

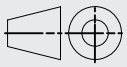

[1] Ports 1, 3 and 5: G3/8 (at both ends)
[2] Ports 2 and 4: G1/4
[3] Electrical connection for E-boxes and accessories
[4] DIN rail mounting (two M4x35 screws are required for mounting)
[5] Cover plate
[6] Supply plate, ports 1, 3 and 5: G1/4
[7] Valves/cover plate mounting on manifold rail: thread M3

Type	B1	B2	B3	B4	B5	B6	B7	B8	B9	D1
VABM-L1-18S-G38	129.4	124.4	95.6	76.8	47.8	18.8	51.7	34.8	26	4.5

Type	H1	H2	H3	H4	H5	H6	L3	L4	L5	L6
VABM-L1-18S-G38	72.1	29	11.5	28.4	27.6	6.5	6	20.5	19	1

Valve positions	2	3	4	5	6	7	8	9	10	12	14	16
L1	61	80	99	118	137	156	175	194	213	251	289	327
L2	49	68	87	106	125	144	163	182	201	239	277	315
VABM weight [g]	118	159	200	241	282	323	364	405	446	528	610	692

Ordering data

Technical data – Manifold rails

	Connection	CRC	Material2)	Operating pressure		Max. tightening torque for mounting [Nm]		
	1, 3, 5			[MPa]	[bar]	Valve	DIN rail	Wall
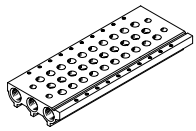	G3/8	2[1)]	Wrought aluminium alloy	–0.09 ... 1	–0.9 ... 10	1.18	1.5	3

1) More information www.festo.com/x/topic/crc
2) Information on materials: RoHS-compliant.

Ordering data – Manifold rail

	Description		Part no.	Type
Manifold rail for in-line valve				
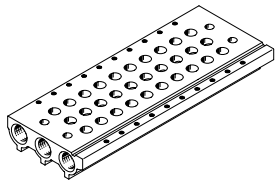	For size G1/4	2 valve positions	**574455**	**VABM-L1-18S-G38-2**
		3 valve positions	**574456**	**VABM-L1-18S-G38-3**
		4 valve positions	**574457**	**VABM-L1-18S-G38-4**
		5 valve positions	**574458**	**VABM-L1-18S-G38-5**
		6 valve positions	**574459**	**VABM-L1-18S-G38-6**
		7 valve positions	**574460**	**VABM-L1-18S-G38-7**
		8 valve positions	**574461**	**VABM-L1-18S-G38-8**
		9 valve positions	**574462**	**VABM-L1-18S-G38-9**
		10 valve positions	**574463**	**VABM-L1-18S-G38-10**
		12 valve positions	**574464**	**VABM-L1-18S-G38-12**
		14 valve positions	**574465**	**VABM-L1-18S-G38-14**
		16 valve positions	**574466**	**VABM-L1-18S-G38-16**

Ordering data

Ordering data – Accessories

	Description		Part no.	Type
Cover plate				Datasheets a Internet: vabb
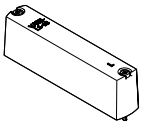	For valve position on manifold rail, including screws and seal		**574482**	**VABB-L1-18**
	For valve position on manifold rail, including screws and seal, suitable for battery manufacturing		**8172852**	**VABB-L1-18-F1A**
Separator				Datasheets a Internet: vabd
	For creating pressure zones		**574483**	**VABD-14-B**
	For creating pressure zones, suitable for battery manufacturing		**8168590**	**VABD-14-B-F1A**
Supply plate				Datasheets a Internet: vabf
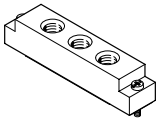	For valve position on manifold rail, including screws and seal		**574481**	**VABF-L1-18-P3A4-G14**
	For valve position on manifold rail, including screws and seal, suitable for battery manufacturing		**8172851**	**VABF-L1-18-P3A4-G14-F1A**
Seals for in-line valves				Datasheets a Internet: vabd
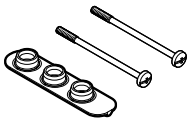	For G1/4 in-line valves	Delivery quantity: 10 sets (each with 2 screws and 1 seal)	**574479**	**VABD-L1-18X-S-G14**
	For G1/4 in-line valves, suitable for battery manufacturing	Delivery quantity: 10 sets (each with 2 screws and 1 seal)	**8172850**	**VABD-L1-18X-S-G14-F1A**

Note

Connect supply plate at port 1 with compressed air.
Reverse operation (pressure at port 3, 5) is not permissible.

Datasheet

Function
5/2-way, single solenoid
5/2-way, double solenoid valve
5/3C, 5/3U, 5/3E

Circuit diagrams a Page 14

- Size 10 mm
- Flow rate
  80 ... 100 l/min
- Voltage
  5, 12 and 24 V DC

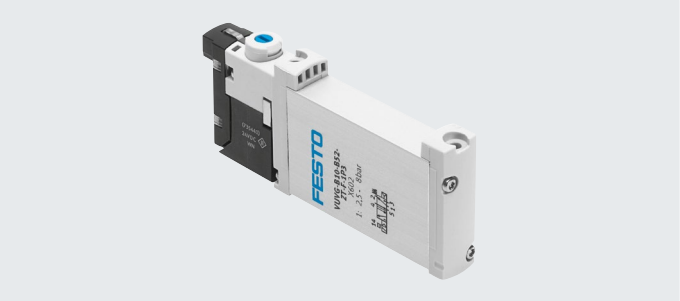

General technical data VUVG-B							
Valve function			M52-R	B52	M52-M	P53	
Normal position			–	–	–	C1)	U2) E3)
Stable position			Monostable	Bistable	Monostable	Monostable	
Pneumatic spring return			Yes4)	–	No	–	
Mechanical spring return			Yes4)	–	Yes	Yes	
Vacuum operation at port 1			Only with external pilot air supply				
Design			Piston spool				
Sealing principle			Soft				
Actuation type			Electrical				
Type of control			Piloted				
Pilot air supply			External, internal; can be selected via sub-base				
Exhaust air function			Can be throttled				
Manual override			Choice of non-detenting, covered, non-detenting/detenting or detenting				
Type of mounting			On manifold rail				
Mounting position			Any				
Nominal width		[mm]	2		1.4	2	
Standard nominal flow rate		[l/min]	100		80	90	
Flow rate on manifold rail M3		[l/min]	100		80	90	
Switching time on/off		[ms]	7/15	–	7/21	8/25	
Switching time changeover		[ms]	–	8	–	14	
Size		[mm]	10				
Connection	1, 3, 5		M7 in manifold rail				
	2, 4		M5 in manifold rail				
	12/14, 82/84		M5 in manifold rail				
Product weight		[g]	38	49	37	49	
Certification			c UL us – Recognized (OL)				
			RCM				
CE marking (see declaration of conformity)5)			To EU EMC Directive				
Corrosion resistance class CRC6)			2				

1) C=Normally closed/mid-position closed
2) U=Normally open/mid-position pressurised
3) E=Mid-position exhausted
4) Combined reset method
5) For information about the area of use, see the EC declaration of conformity at: www.festo.com/catalogue/... d Support/Downloads.
If the devices are subject to usage restrictions in residential, commercial or light-industrial environments, further measures for the reduction of the emitted interference may be necessary.
6) More information www.festo.com/x/topic/crc

Datasheet

Operating and environmental conditions						
Valve function			M52-R1)	B52	M52-M2)	P53
Operating medium			Compressed air to ISO 8573-2010 [7:4:4]			
Operating pressure	Internal	[MPa]	0.25 ... 0.8	0.15 ... 0.8	0.3 ... 0.8	
		[bar]	2.5 ... 8	1.5 ... 8	3 ... 8	
	External	[MPa]	–0.09 ... 1		–0.09 ... 0.8	–0.09 ... 1
		[bar]	–0.9 ... 10		–0.9 ... 8	–0.9 ... 10
Pilot pressure		[MPa]	0.25 ... 0.8	0.15 ... 0.8	0.3 ... 0.8	
		[bar]	2.5 ... 8	1.5 ... 8	3 ... 8	
Ambient temperature		[°C]	–5 ... +50, with holding current reduction –5 ... +60			
Temperature of medium		[°C]	–5 ... +50, with holding current reduction –5 ... +60			
Cleanroom class			ISO class 5			

1) Mixed, pneumatic/mechanical spring
2) Mechanical spring

Electrical data		
Electrical connection		Via E-box a page 113
Operating voltage	[V DC]	5, 12 and 24 ±10%
Power	[W]	1, reduced to 0.35 with holding current reduction
Duty cycle	[%]	100
Degree of protection to EN 60529		IP40 (with plug socket), IP65 (with M8)

Information on materials	
Housing	Wrought aluminium alloy
Seals	HNBR, NBR
Note on materials	RoHs-compliant
LABS (PWIS) conformity	VDMA24364-B1/B2-L

Dimensions Download CAD data ➔ www.festo.com

5/2- and 5/3-way valves

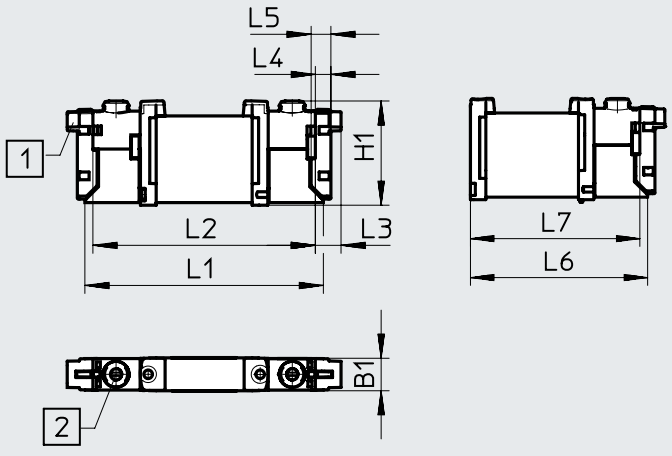

Note
More dimensions for E-boxes
a page 115

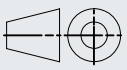

[1] Vertical electrical connection [2] Manual override

Type	B1	H1	L1	L2	L3	L4	L5	L6	L7
VUVG-B10A-...-F...	10.2	32.5	73.9	68.9	8	4.85	6.15	56.9	54.4

Ordering data

Ordering data

	Description		Part no.	Type
Sub-base valve M3, without E-box				
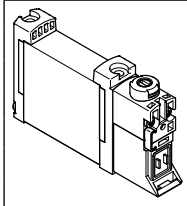	**5/2-way valve, single solenoid**			
	External pilot air supply	Pneumatic/mechanical spring return	**566448**	**VUVG-B10A-M52-RZT-F-1P3**
		Mechanical spring return	**574347**	**VUVG-B10A-M52-MZT-F-1P3**
	5/2-way valve, double solenoid			
	External pilot air supply		**566449**	**VUVG-B10A-B52-ZT-F-1P3**
	5/3-way valve			
	External pilot air supply	Mid-position closed, mechanical spring return	**566450**	**VUVG-B10A-P53C-ZT-F-1P3**
		Mid-position exhausted, mechanical spring return	**566451**	**VUVG-B10A-P53E-ZT-F-1P3**
		Mid-position pressurised, mechanical spring return	**566452**	**VUVG-B10A-P53U-ZT-F-1P3**

Manifold assembly

Sub-base valve for
Manifold assembly
Connection M5

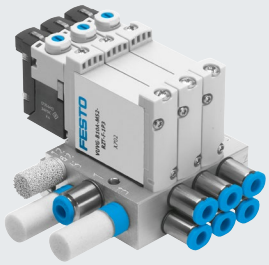

Dimensions Download CAD data ➔ www.festo.com

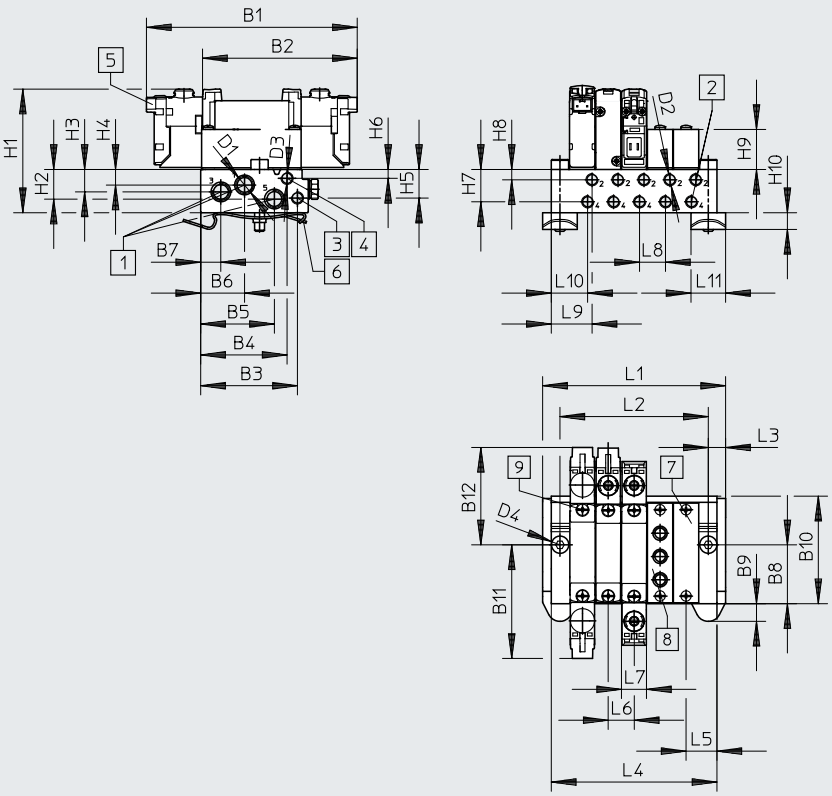

Note

More dimensions for E-boxes
a page 115

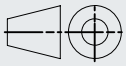

[1] Ports 1, 3 and 5: M7 (at both ends)
[2] Ports 2, 4: M5
[3] Ports 12, 14: M5
[4] Ports 82, 84: M5
[5] Electrical connection for E-boxes and accessories
[6] DIN rail mounting (two M4x25 screws are required for mounting)
[7] Cover plate
[8] Supply plate, ports 1, 3 and 5: M5
[9] Valves/cover plate mounting on manifold rail: thread M2

Type	B1	B2	B3	B4	B5	B6	B7	B8	B9	B10	B11	B12
VABM-L1-10AW-M7	84.9	62.4	39.1	35	29.8	17.8	8.2	24	7.2	43.5	45.8	39.2

Type	D1	D2	D3	D4	D5	H1	H2	H3	H4	H5	H6
VABM-L1-10AW-M7	M7	M5	M5	Ø 4.5	Ø4	53.1	12	9.1	6.3	11.6	3.6

Type	H7	H8	H9	H10	H15	L3	L5	L6	L7	L8	L9	L10	L11
VABM-L1-10AW-M7	13.1	4.2	16.2	6.8	1.9	7.5	12.5	10.5	10.2	10.5	17	15.2	14

Valve positions	2	3	4	5	6	7	8	9	10	12	14	16
L1	43.5	54	64.5	75	85.5	97	107.5	117	127.5	148.5	169.5	190.5
L2	28.5	39	49.5	60	70.5	81	91.5	102	112.5	133.5	154.5	175.5
L4	36.5	47	57.5	68	78.5	89	99.5	110	120.5	141.5	162.5	183.5
VABM weight [g]	60	78	96	114	132	150	168	186	204	240	276	312

Ordering data

Technical data – Manifold rails1)

	Connection			CRC	Materials3)	Operating pressure		Max. tightening torque for mounting [Nm]		
	2, 4	1, 3, 5	12/14, 82/84			[MPa]	[bar]	Valve	DIN rail	Wall
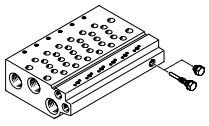	M5	M7	M5	2[2)]	Wrought aluminium alloy	–0.09 ... 1	–0.9 ... 10	0.45	1.5	1.5

1) Blanking plugs are included with the manifold rail.
2) More information www.festo.com/x/topic/crc
3) Information on materials: RoHS-compliant.

Ordering data – Manifold rails

	Description		Part no.	Type
Manifold rail for sub-base valve M3				
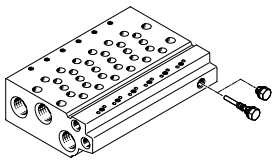	For size B10A (M3)	2 valve positions	**566546**	**VABM-L1-10AW-M7-2**
		3 valve positions	**566547**	**VABM-L1-10AW-M7-3**
		4 valve positions	**566548**	**VABM-L1-10AW-M7-4**
		5 valve positions	**566549**	**VABM-L1-10AW-M7-5**
		6 valve positions	**566550**	**VABM-L1-10AW-M7-6**
		7 valve positions	**566551**	**VABM-L1-10AW-M7-7**
		8 valve positions	**566552**	**VABM-L1-10AW-M7-8**
		9 valve positions	**566553**	**VABM-L1-10AW-M7-9**
		10 valve positions	**566554**	**VABM-L1-10AW-M7-10**
		12 valve positions	**566555**	**VABM-L1-10AW-M7-12**
		14 valve positions	**566556**	**VABM-L1-10AW-M7-14**
		16 valve positions	**566557**	**VABM-L1-10AW-M7-16**

Ordering data – Accessories

	Description		Part no.	Type
Cover plate				Datasheets a Internet: vabb
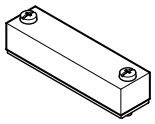	For valve position on manifold rail, including screws and seal		**569986**	**VABB-L1-10A**
Separator				Datasheets a Internet: vabd
	For creating pressure zones		**570872**	**VABD-4.2-B**
Supply plate				Datasheets a Internet: vabf
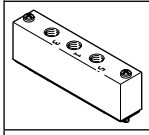	For valve position on manifold rail, including screws and seal		**569990**	**VABF-L1-10A-P3A4-M5**
Seals				Datasheets a Internet: vabd
	For sub-base valve M3	Delivery quantity: 10 sets (each with 2 screws and 1 seal)	**566671**	**VABD-L1-10AB-S-M3**

Datasheet

Function
2x 3/2C
5/2-way, single solenoid
5/2-way, double solenoid valve

Circuit diagrams a Page 14

- Size 10 mm
- Flow rate 160 l/min
- Voltage 24 V DC

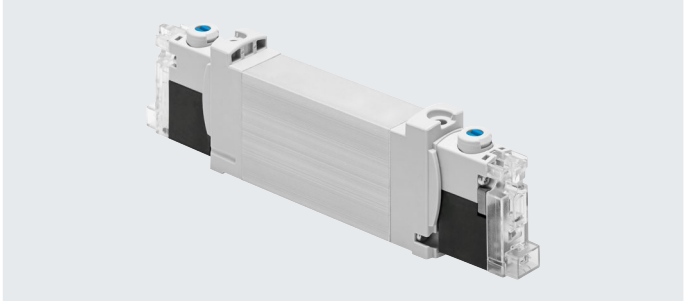

General technical data VUVG-BK				
Valve function		T32-A	M52-A	B52
Normal position		C1)	–	–
Stable position		Monostable		Bistable
Pneumatic spring return		Yes	Yes	–
Design		Piston spool		
Sealing principle		Soft		
Actuation type		Electrical		
Type of control		Piloted		
Pilot air supply		Internal		
Exhaust air function		Can be throttled		
Manual override		Non-detenting, detenting		
Type of mounting		On manifold rail		
Mounting position		Any		
Standard nominal flow rate	[l/min]	160	160	160
Switching time on/off	[ms]	12/14	14/17	–
Switching time changeover	[ms]	–		8
Size	[mm]	10		
Connection 2, 4		M5/M7 in manifold rail		
Product weight	[g]	55	45	57
Corrosion resistance class CRC2)		0		
Certificate-issuing authority		UL MH19482		
Certification		c UL us – Recognized (OL)		

1) C = Normally closed
2) More information www.festo.com/x/topic/crc

Safety characteristics		
Max. positive test pulse with logic 0	[µs]	1600
Max. negative test pulse with logic 1	[µs]	3000
Shock resistance		Shock test with severity level 1 to FN 942017-5 and EN 60068-2-27
Vibration resistant		Transport application test with severity level 1 to FN 942017-4 and EN 60068-2-6

Datasheet

Operating and environmental conditions				
Valve function		T32-A1)	M52-A1)	B52
Operating medium		Compressed air to ISO 8573-2010 [7:4:4]		
Note on the operating/pilot medium		Lubricated operation possible (in which case lubricated operation will always be required)		
Operating pressure	[MPa]	0.15 ... 0.7	0.25 ... 0.7	0.15 ... 0.7
	[bar]	1.5 ... 7	2.5 ... 7	1.5 ... 7
Ambient temperature	[°C]	–5 ... +50		
Temperature of medium	[°C]	–5 ... +50		

1) Pneumatic spring

Electrical data		
Electrical connection		Via E-box a page 113
Operating voltage	[V DC]	24 ±10%
Nominal operating voltage	[V DC]	22
Power	[W]	0.7
Duty cycle	[%]	100
Degree of protection to EN 60529		IP40 (with plug socket), IP65 (with M8)
Signal status indication		LED
Maximum switching frequency	[Hz]	2

Information on materials	
Housing	Wrought aluminium alloy
Seals	HNBR, NBR
Note on materials	RoHs-compliant
LABS (PWIS) conformity	VDMA24364-Zone III

Pin assignment for E-box

	Pin		Description
Rectangular plug, connection pattern H			
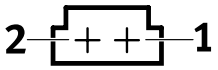	1	+ or –	Protective circuit without holding current reduction
	2	+ or –	
Round plug, M8, 3-pin			
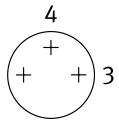	1	Not used	Protective circuit without holding current reduction
	3	+ or –	
	4	+ or –	

Protective circuit without holding current reduction

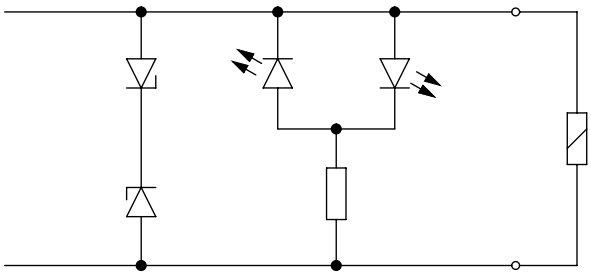

The solenoid coils have a protective circuit to arrest sparks and protect against polarity reversal.

Datasheet

Dimensions Download CAD data ➔ www.festo.com

2x 3/2-way, 5/2-way valve, double solenoid

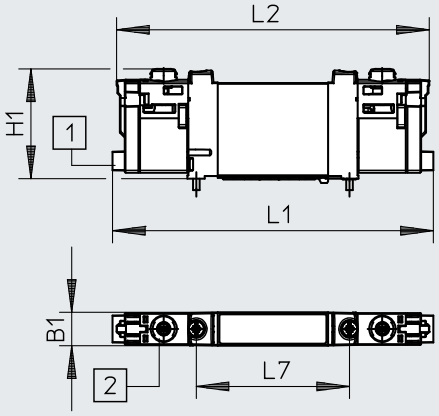

5/2-way valve, single solenoid

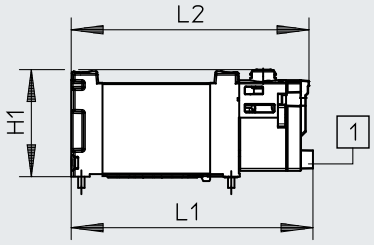

Note

More dimensions for E-boxes
a page 115

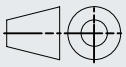

[1] Horizontal electrical connection [2] Manual override

Type	B1	H1	L1	L2	L7
VUVG-BK10-T32C-...	10.2	33.6	98.3	95.8	47
VUVG-BK10-B52-...					
VUVG-BK10-M52-...			75.9	74.6	

Ordering data

★ Core Range

Ordering data	Description		Part no.	Type
Sub-base valve M5/M7, with E-box R8				
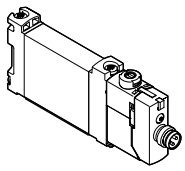	**2x 3/2-way valve**			
	Internal pilot air supply	Normally closed, pneumatic spring return	**8042558**	**VUVG-BK10-T32C-AT-F-1R8L-S**
	5/2-way valve, single solenoid			
	Internal pilot air supply	Pneumatic spring return	**8042559**	**VUVG-BK10-M52-AT-F-1R8L-S**
	5/2-way valve, double solenoid			
	Internal pilot air supply		**8042560**	**VUVG-BK10-B52-T-F-1R8L-S**
Sub-base valve M5/M7, with E-box H2				
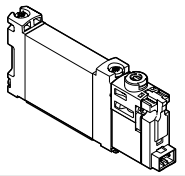	**2x 3/2-way valve**			
	Internal pilot air supply	Normally closed, pneumatic spring return	**8042554**	**VUVG-BK10-T32C-AT-F-1H2L-S**
	5/2-way valve, single solenoid			
	Internal pilot air supply	Pneumatic spring return	**8042555**	**VUVG-BK10-M52-AT-F-1H2L-S**
	5/2-way valve, double solenoid			
	Internal pilot air supply		**8042556**	**VUVG-BK10-B52-T-F-1H2L-S**

Datasheet

Function
2x 3/2C, 2x 3/2U, 2x 3/2H
5/2-way, single solenoid
5/2-way, double solenoid valve
5/3C, 5/3U, 5/3E

Circuit diagrams a Page 14

- Size 10 mm
- Flow rate
  120 ... 330 l/min
- Voltage
  5, 12 and 24 V DC

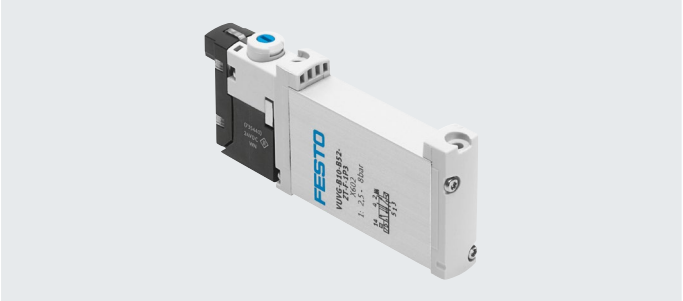

General technical data VUVG-B

Valve function			T32-A			T32-M			M52-R	B52	M52-M	P53		
Normal position			C1)	U2)	H4)	C1)	U2)	H4)	–	–	–	C1)	U2)	E3)
Stable position			Monostable							Bistable	Monostable	Monostable		
Pneumatic spring return			Yes			No			Yes5)	–	No	–		
Mechanical spring return			No			Yes			Yes5)	–	Yes	Yes		
Vacuum operation at port 1			No			Only with external pilot air supply								
Design			Piston spool											
Sealing principle			Soft											
Actuation type			Electrical											
Type of control			Piloted											
Pilot air supply			External, internal; can be selected via sub-base											
Exhaust air function			Can be throttled											
Manual override			Choice of non-detenting, covered, non-detenting/detenting or detenting											
Type of mounting			On manifold rail											
Mounting position			Any											
Nominal width		[mm]	2.7			1.8	1.7		4		2.3	3.5		
Standard nominal flow rate		[l/min]	170			150	140	140	330		285	300		
Flow rate on manifold rail M5		[l/min]	150			130	120	120	210		180	200		
Flow rate on manifold rail M7		[l/min]	160			140	130	130	270		230	250		
Switching time on/off		[ms]	6/15			8/11			7/17	–	8/24	11/30		
Switching time changeover		[ms]	–							8		14		
Size		[mm]	10											
Connection	1, 3, 5		G1/8 in manifold rail											
	2, 4		M5 or M7 in manifold rail											
	12/14, 82/84		M5 in manifold rail											
Product weight		[g]	55			54			45	55	44	55		
Certification			c UL us – Recognized (OL)											
			RCM											
CE marking (see declaration of conformity)[6]			To EU EMC Directive											
Corrosion resistance class CRC7)			2											

1) C=Normally closed/mid-position closed
2) U=Normally open/mid-position pressurised
3) E=Mid-position exhausted
4) H=2x 3/2-way valve in one housing with 1x normally closed and 1x normally open
5) Combined reset method
6) For information about the area of use, see the EC declaration of conformity at: www.festo.com/catalogue/... d Support/Downloads.
   If the devices are subject to usage restrictions in residential, commercial or light-industrial environments, further measures for the reduction of the emitted interference may be necessary.
7) More information www.festo.com/x/topic/crc

Datasheet

Operating and environmental conditions								
Valve function			T32-A1)	T32-M3)	M52-R2)	B52	M52-M3)	P53
Operating medium			Compressed air to ISO 8573-2010 [7:4:4]					
Operating pressure	Internal	[MPa]	0.15 ... 0.8	0.25 ... 0.8	0.25 ... 0.8	0.15 ... 0.8	0.3 ... 0.8	
		[bar]	1.5 ... 8	2.5 ... 8	2.5 ... 8	1.5 ... 8	3 ... 8	
	External	[MPa]	0.15 ... 1	–0.09 ... 1			–0.09 ... 0.8	–0.09 ... 1
		[bar]	1.5 ... 10	–0.9 ... 10			–0.9 ... 8	–0.9 ... 10
Pilot pressure		[MPa]	0.15 ... 0.8	0.2 ... 0.8	0.25 ... 0.8	0.15 ... 0.8	0.3 ... 0.8	
		[bar]	1.5 ... 8	2 ... 8	2.5 ... 8	1.5 ... 8	3 ... 8	
Ambient temperature		[°C]	–5 ... +50, with holding current reduction –5 ... +60					
Temperature of medium		[°C]	–5 ... +50, with holding current reduction –5 ... +60					
Cleanroom class			ISO class 5					

1) Pneumatic spring
2) Mixed, pneumatic/mechanical spring
3) Mechanical spring

Electrical data		
Electrical connection		Plug M8x1, A-coded to EN 61076-2-104, 3-pin
Operating voltage	[V DC]	5, 12 and 24 ±10%
Power	[W]	1, reduced to 0.35 with holding current reduction
Duty cycle	[%]	100
Degree of protection to EN 60529		IP40 (with plug socket), IP65 (with M8)

Information on materials	
Housing	Wrought aluminium alloy
Seals	HNBR, NBR
Note on materials	RoHs-compliant
LABS (PWIS) conformity	VDMA24364-B1/B2-L

Dimensions Download CAD data ➔ www.festo.com

2x 3/2-way, 5/2-way and 5/3-way valve

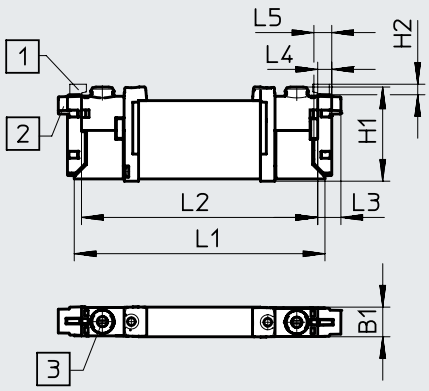

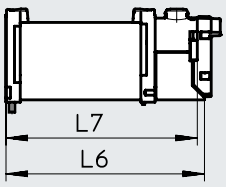

Note
More dimensions for E-boxes
a page 115

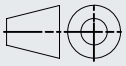

[1] Vertical electrical connection [2] Horizontal electrical connection [3] Manual override

Type	B1	H1	H2	L1	L2	L3	L4	L5	L6	L7
VUVG-B10 -...-F...	10.2	32.5	3.6	86.5	81.5	8	4.85	6.15	69.2	66.7

Ordering data

Ordering data

	Description		Part no.	Type
Sub-base valve M5/M7, without E-box				
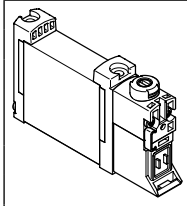	**2x 3/2-way valve**			
	External pilot air supply	Normally closed, pneumatic spring return	**566487**	**VUVG-B10-T32C-AZT-F-1P3**
		Normally open, pneumatic spring return	**566488**	**VUVG-B10-T32U-AZT-F-1P3**
		1x normally open, 1x normally closed, pneumatic spring return	**566489**	**VUVG-B10-T32H-AZT-F-1P3**
		Normally closed, mechanical spring return	**574364**	**VUVG-B10-T32C-MZT-F-1P3**
		Normally open, mechanical spring return	**574365**	**VUVG-B10-T32U-MZT-F-1P3**
		1x normally open, 1x normally closed, mechanical spring return	**574366**	**VUVG-B10-T32H-MZT-F-1P3**
	5/2-way valve, single solenoid			
	External pilot air supply	Pneumatic/mechanical spring return	**566490**	**VUVG-B10-M52-RZT-F-1P3**
		Mechanical spring return	**574367**	**VUVG-B10-M52-MZT-F-1P3**
	5/2-way valve, double solenoid			
	External pilot air supply		**566491**	**VUVG-B10-B52-ZT-F-1P3**
	5/3-way valve			
	External pilot air supply	Mid-position closed, mechanical spring return	**566492**	**VUVG-B10-P53C-ZT-F-1P3**
		Mid-position exhausted, mechanical spring return	**566493**	**VUVG-B10-P53E-ZT-F-1P3**
		Mid-position pressurised, mechanical spring return	**566494**	**VUVG-B10-P53U-ZT-F-1P3**
Sub-base valve M5/M7, with E-box R8				
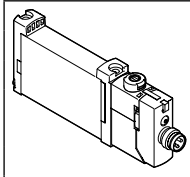	**2x 3/2-way valve**			
	External pilot air supply	Normally closed, pneumatic spring return	**574234**	**VUVG-B10-T32C-AZT-F-1R8L**
		Normally open, pneumatic spring return	**574235**	**VUVG-B10-T32U-AZT-F-1R8L**
		1x normally open, 1x normally closed, pneumatic spring return	**574236**	**VUVG-B10-T32H-AZT-F-1R8L**
		Normally closed, mechanical spring return	**8031492**	**VUVG-B10-T32C-MZT-F-1R8L**
		Normally open, mechanical spring return	**8031493**	**VUVG-B10-T32U-MZT-F-1R8L**
		1x normally open, 1x normally closed, mechanical spring return	**8031494**	**VUVG-B10-T32H-MZT-F-1R8L**
	5/2-way valve, single solenoid			
	External pilot air supply	Pneumatic/mechanical spring return	**574237**	**VUVG-B10-M52-RZT-F-1R8L**
		Mechanical spring return	**578157**	**VUVG-B10-M52-MZT-F-1R8L**
	5/2-way valve, double solenoid			
	External pilot air supply		**574238**	**VUVG-B10-B52-ZT-F-1R8L**
	5/3-way valve			
	External pilot air supply	Mid-position closed, mechanical spring return	**574239**	**VUVG-B10-P53C-ZT-F-1R8L**
		Mid-position exhausted, mechanical spring return	**574241**	**VUVG-B10-P53E-ZT-F-1R8L**
		Mid-position pressurised, mechanical spring return	**574240**	**VUVG-B10-P53U-ZT-F-1R8L**

Manifold assembly

Sub-base valve for
Manifold assembly
M5 or M7 connection

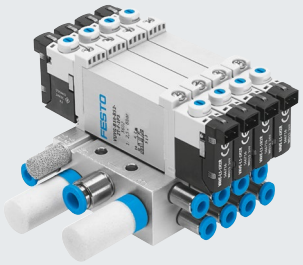

Dimensions Download CAD data ➔ www.festo.com

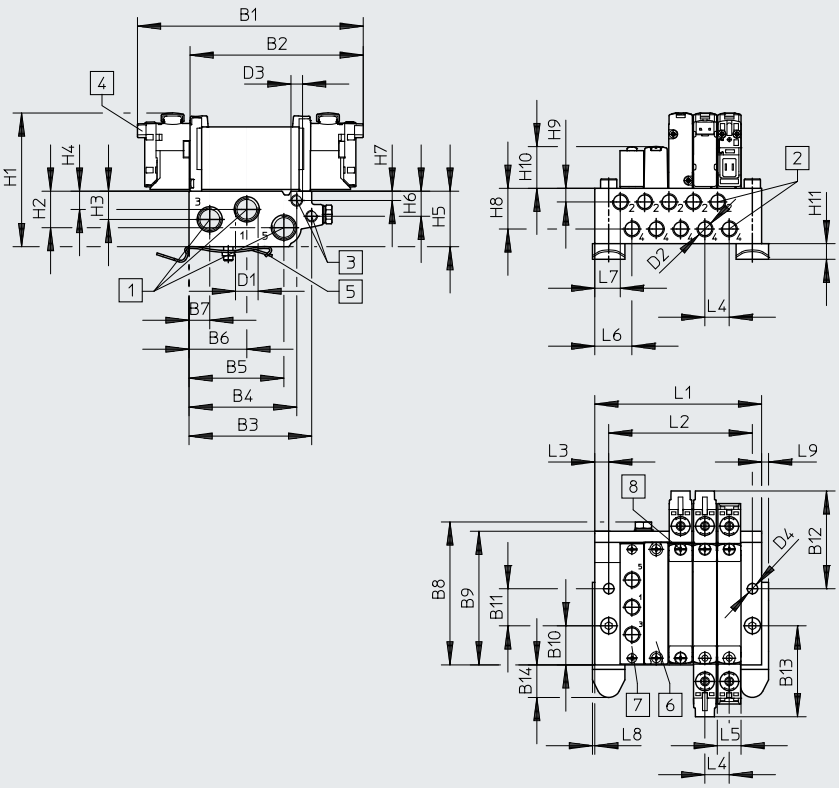

Note
More dimensions for E-boxes
a page 115

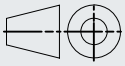

[1] Ports 1, 3 and 5: G1/8 (at both ends)
[2] Ports 2, 4: M7 or M5
[3] Ports 12, 14: M5
[4] Electrical connection for E-boxes and accessories
[5] DIN rail mounting (two M4x30 screws are required for mounting)
[6] Cover plate
[7] Supply plate, ports 1, 3 and 5: either M5 or M7
[8] Valves/cover plate mounting on manifold rail: thread M2

Type	B1	B2	B3	B4	B5	B6	B7	B8	B9	B10	B11	B12
VABM-L1 10-...-G18	97.5	74.8	52.9	46.5	40.9	24.9	8.9	61.7	57.7	16.9	16	42.2

Type	B13	B14	D1	D2	D3	D4	D5	H1	H2	H3	H4
VABM-L1 10-...-G18	39.3	14.1	G1/8	M5/M7	M5	4.5	Ø6	56.4	15.7	12.2	7.9

Type	H5	H6	H7	H8	H9	H10	H11	L3	L4	L5	L6	L7	L8	L9
VABM-L1 10-...-G18	23.9	10.8	4	17.6	5.9	18	6.8	6	10.5	10.3	16	11.9	1	3

Valve positions	2	3	4	5	6	7	8	9	10	12	14	16	22
L1	40.5	51	61.5	72	82.5	93	103.5	114	124.5	145.5	166.5	187.5	250.5
L2	30.5	41	51.5	62	72.5	83	93.5	104	114.5	135.5	156.5	177.5	240.5
VABM weight [g]	107	135	163	191	219	247	275	303	331	387	415	471	499

Manifold assembly

Technical data – Manifold rails1)

	Connection			CRC	Materials3)	Operating pressure		Max. tightening torque for mounting [Nm]		
	2, 4	1, 3, 5	12/14, 82/84			[MPa]	[bar]	Valve	DIN rail	Wall
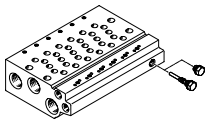	M5 or M7	G1/8	M5	2[2)]	Wrought aluminium alloy	–0.09 ... 1	–0.9 ... 10	0.45	1.5	3

1) Blanking plugs are included with the manifold rail.
2) More information www.festo.com/x/topic/crc
3) Information on materials: RoHS-compliant.

Ordering data – Manifold rails

	Description		Part no.	Type
Manifold rail for sub-base valve M5/M7				
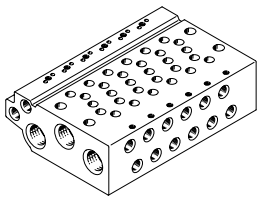	For size B10 (M5)	2 valve positions	**566582**	**VABM-L1-10W-G18-2**
		3 valve positions	**566583**	**VABM-L1-10W-G18-3**
		4 valve positions	**566584**	**VABM-L1-10W-G18-4**
		5 valve positions	**566585**	**VABM-L1-10W-G18-5**
		6 valve positions	**566586**	**VABM-L1-10W-G18-6**
		7 valve positions	**566587**	**VABM-L1-10W-G18-7**
		8 valve positions	**566588**	**VABM-L1-10W-G18-8**
		9 valve positions	**566589**	**VABM-L1-10W-G18-9**
		10 valve positions	**566590**	**VABM-L1-10W-G18-10**
		12 valve positions	**566591**	**VABM-L1-10W-G18-12**
		14 valve positions	**566592**	**VABM-L1-10W-G18-14**
		16 valve positions	**566593**	**VABM-L1-10W-G18-16**

Manifold assembly

Ordering data – Accessories

	Description			Part no.	Type
Manifold rail for sub-base valve M5/M7					
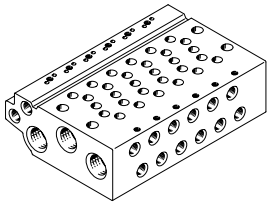	For size B10 (M7)		2 valve positions	**566606**	**VABM-L1-10HW-G18-2**
			3 valve positions	**566607**	**VABM-L1-10HW-G18-3**
			4 valve positions	**566608**	**VABM-L1-10HW-G18-4**
			5 valve positions	**566609**	**VABM-L1-10HW-G18-5**
			6 valve positions	**566610**	**VABM-L1-10HW-G18-6**
			7 valve positions	**566611**	**VABM-L1-10HW-G18-7**
			8 valve positions	**566612**	**VABM-L1-10HW-G18-8**
			9 valve positions	**566613**	**VABM-L1-10HW-G18-9**
			10 valve positions	**566614**	**VABM-L1-10HW-G18-10**
			12 valve positions	**566615**	**VABM-L1-10HW-G18-12**
			14 valve positions	**566616**	**VABM-L1-10HW-G18-14**
			16 valve positions	**566617**	**VABM-L1-10HW-G18-16**
Cover plate					Datasheets a Internet: vabb
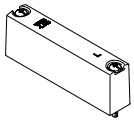	For valve position on manifold rail, including screws and seal			**566495**	**VABB-L1-10-W**
Separator					Datasheets a Internet: vabd
	For creating pressure zones			**569994**	**VABD-6-B**
Supply plate					Datasheets a Internet: vabf
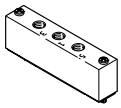	For valve position (sub-base valves M5) on manifold rail, including screws and seal			**569991**	**VABF-L1-10-P3A4-M5**
	For valve position (sub-base valves M7) on manifold rail, including screws and seal			**569992**	**VABF-L1-10-P3A4-M7**
Seals					Datasheets a Internet: vabd
	Only suitable for VUVG-B10	For sub-base valves M5/M7	Delivery quantity: 10 sets (each with 2 screws and 1 seal)	**566674**	**VABD-L1-10B-S-M7**

Datasheet

Function
2x 3/2C
5/2-way, single solenoid
5/2-way, double solenoid valve

Circuit diagrams a Page 14

- Size 14 mm
- Flow rate
  350 ... 380 l/min
- Voltage
  24 V DC

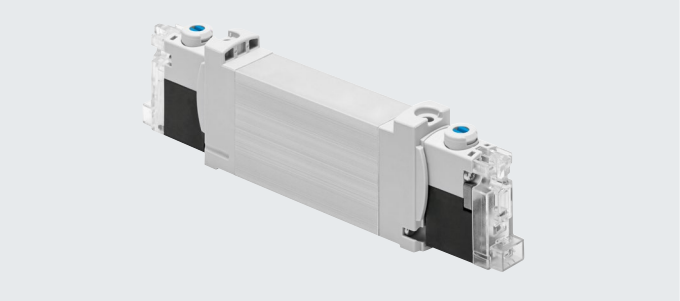

General technical data VUVG-BK					
Valve function			T32-A	M52-A	B52
Normal position			C1)	–	–
Stable position			Monostable		Bistable
Pneumatic spring return			Yes	Yes	–
Design			Piston spool		
Sealing principle			Soft		
Actuation type			Electrical		
Type of control			Piloted		
Pilot air supply			Internal		
Exhaust air function			Can be throttled		
Manual override			Non-detenting, detenting		
Type of mounting			On manifold rail		
Mounting position			Any		
Standard nominal flow rate		[l/min]	350	380	380
Switching time on/off		[ms]	13/20	14/24	–
Switching time changeover		[ms]	–		8
Size		[mm]	14		
Connection	2, 4		G1/8 in manifold rail		
Product weight		[g]	75	65	85
Corrosion resistance class CRC2)			0		
Certificate-issuing authority			UL MH19482		
Certification			c UL us – Recognized (OL)		

1) C = Normally closed
2) More information www.festo.com/x/topic/crc

Safety characteristics		
Max. positive test pulse with logic 0	[µs]	1600
Max. negative test pulse with logic 1	[µs]	3000
Shock resistance		Shock test with severity level 1 to FN 942017-5 and EN 60068-2-27
Vibration resistant		Transport application test with severity level 1 to FN 942017-4 and EN 60068-2-6

Datasheet

Operating and environmental conditions				
Valve function		T32-A1)	M52-A1)	B52
Operating medium		Compressed air to ISO 8573-2010 [7:4:4]		
Note on the operating/pilot medium		Lubricated operation possible (in which case lubricated operation will always be required)		
Operating pressure	[MPa]	0.15 ... 0.7	0.25 ... 0.7	0.15 ... 0.7
	[bar]	1.5 ... 7	2.5 ... 7	1.5 ... 7
Ambient temperature	[°C]	–5 ... +50		
Temperature of medium	[°C]	–5 ... +50		

1) Pneumatic spring

Electrical data		
Electrical connection		Via E-box a page 113
Operating voltage	[V DC]	24 ±10%
Nominal operating voltage	[V DC]	22
Power	[W]	0.7
Duty cycle	[%]	100
Degree of protection to EN 60529		IP40 (with plug socket), IP65 (with M8)
Signal status indication		LED
Maximum switching frequency	[Hz]	2

Information on materials	
Housing	Wrought aluminium alloy
Seals	HNBR, NBR
Note on materials	RoHs-compliant
LABS (PWIS) conformity	VDMA24364-Zone III

Pin assignment for E-box			
	Pin		Description
Rectangular plug, connection pattern H			
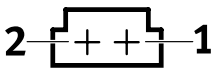	1	+ or –	Protective circuit without holding current reduction
	2	+ or –	
Round plug, M8, 3-pin			
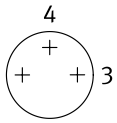	1	Not used	Protective circuit without holding current reduction
	3	+ or –	
	4	+ or –	

Protective circuit without holding current reduction

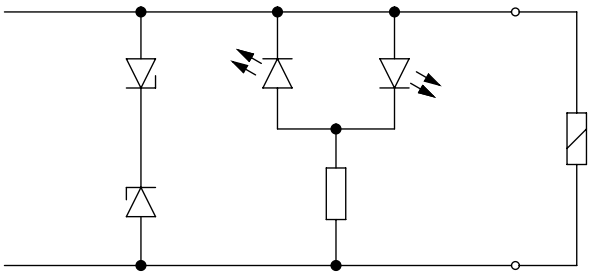

The solenoid coils have a protective circuit to arrest sparks and protect against polarity reversal.

Datasheet

Dimensions Download CAD data ➔ www.festo.com

2x 3/2-way, 5/2-way valve, single solenoid

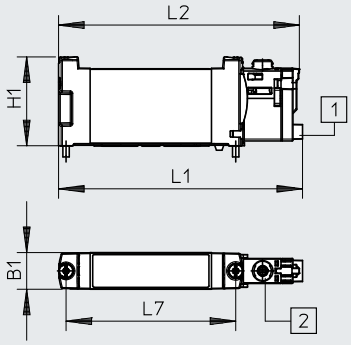

5/2-way valve, double solenoid

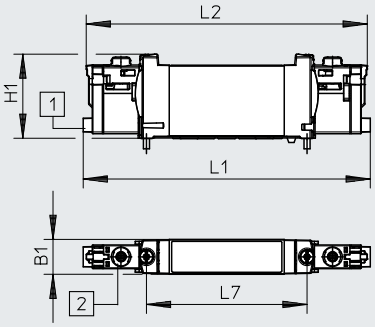

Note

More dimensions for E-boxes
a page 115

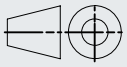

[1] Horizontal electrical connection

[2] Manual override

Type	B1	H1	L1	L2	L7
VUVG-BK14-T32C-...	14.4	34.8	118.9	116.4	66.5
VUVG-BK14-B52-...					
VUVG-BK14-M52-...			95.6	94.4	

Ordering data

★ Core Range

Ordering data

	Description		Part no.	Type
Sub-base valve G1/8, with E-box R8				
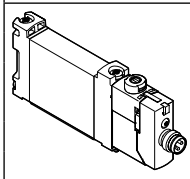	**2x 3/2-way valve**			
	Internal pilot air supply	Normally closed, pneumatic spring return	**8042574**	**VUVG-BK14-T32C-AT-F-1R8L-S**
	5/2-way valve, single solenoid			
	Internal pilot air supply	Pneumatic spring return	**8042575**	**VUVG-BK14-M52-AT-F-1R8L-S**
	5/2-way valve, double solenoid			
	Internal pilot air supply		**8042576**	**VUVG-BK14-B52-T-F-1R8L-S**
Sub-base valve G1/8, with E-box H2				
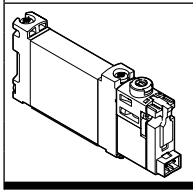	**2x 3/2-way valve**			
	Internal pilot air supply	Normally closed, pneumatic spring return	**8042570**	**VUVG-BK14-T32C-AT-F-1H2L-S**
	5/2-way valve, single solenoid			
	Internal pilot air supply	Pneumatic spring return	**8042571**	**VUVG-BK14-M52-AT-F-1H2L-S**
	5/2-way valve, double solenoid			
	Internal pilot air supply		**8042572**	**VUVG-BK14-B52-T-F-1H2L-S**

Datasheet

Function
2x 3/2C, 2x 3/2U, 2x 3/2H
5/2-way, single solenoid
5/2-way, double solenoid valve
5/3C, 5/3U, 5/3E

Circuit diagrams a Page 14

- Size 14 mm
- Flow rate
  410 ... 680 l/min
- Voltage
  5, 12 and 24 V DC
  24, 110 and 230 V AC
- Voltage VUVG-...-P1
  12 and 24 V DC
  24, 110 and 230 V AC

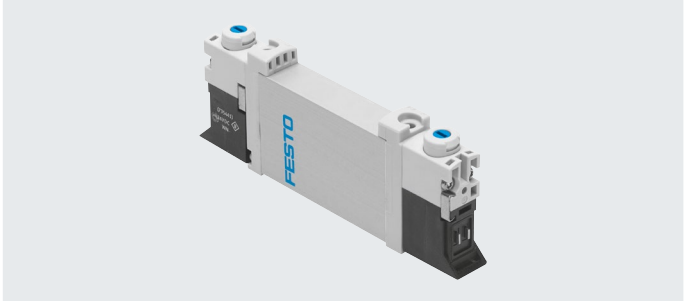

General technical data VUVG-B

Valve function			T32-A			T32-M			M52-A	B52	M52-M	P53		
Normal position			C1)	U2)	H4)	C1)	U2)	H4)	–	–	–	C1)	U2)	E3)
Stable position			Monostable							Bistable	Monostable	Monostable		
Pneumatic spring return			Yes			No			Yes	–	No	–		
Mechanical spring return			No			Yes			No	–	Yes	Yes		
Vacuum operation at port 1			No			Only with external pilot air supply								
Size		[mm]	14											
Design			Piston spool											
Sealing principle			Soft											
Actuation type			Electrical											
Type of control			Piloted											
Pilot air supply			External, internal; can be selected via sub-base											
Exhaust air function			Can be throttled											
Manual override	VUVG-...		Choice of non-detenting, covered, non-detenting/detenting or detenting											
	VUVG-...-P1		Non-detenting, non-detenting/detenting											
Type of mounting			On manifold rail											
Mounting position			Any											
Nominal width		[mm]	4.6			4.3			5.6					
Standard nominal flow rate		[l/min]	600	580		470	450		630	680	630	600	580	580
Flow rate on manifold rail G1/8		[l/min]	510			430	410		520	570		520	500	460
Switching time														
VUVG-...	On/off	[ms]	9/25			12/18			14/22	–	13/40	12/40		
	Changeover	[ms]	–							8		20		
VUVG-...-P1	On/off	[ms]	11/18			14/13			16/16	–	12/26	14/24		
	Changeover	[ms]	–			–			–	12	–	19		
Pneumatic connection	1, 3, 5		G1/4 in manifold rail											
	2, 4		G1/8 in manifold rail											
	12/14, 82/84		M5 in manifold rail											
Product weight	VUVG-...	[g]	89			80			78	89	70	89		
	VUVG-...-P1	[g]	65			56			66	65	58	65		
Certificate-issuing authority	VUVG-...-P1		UL MH19482											
Certification	VUVG-...		RCM											
	VUVG-...		c UL us – Recognized (OL)											
	VUVG-...-P1													
CE marking (see declaration of conformity)5)			To EU EMC Directive											
			To EU Low Voltage Directive											
Corrosion resistance class CRC6)			2											

1) C=Normally closed/mid-position closed
2) U=Normally open/mid-position pressurised
3) E=Mid-position exhausted
4) H=2x 3/2-way valve in one housing with 1x normally closed and 1x normally open
5) For information about the area of use, see the EC declaration of conformity at: www.festo.com/catalogue/... d Support/Downloads.
If the devices are subject to usage restrictions in residential, commercial or light-industrial environments, further measures for the reduction of the emitted interference may be necessary.
6) More information www.festo.com/x/topic/crc

Datasheet

Operating and environmental conditions								
Valve function			T32-A1)	T32-M2)	M52-A1)	B52	M52-M2)	P53
Operating medium			Compressed air to ISO 8573-2010 [7:4:4]					
Note on the operating/pilot medium			Lubricated operation possible (in which case lubricated operation will always be required)					
Operating pressure	Internal VUVG-...	[MPa]	0.15 ... 0.8	0.35 ... 0.8	0.25 ... 0.8	0.15 ... 0.8	0.3 ... 0.8	
		[bar]	1.5 ... 8	3.5 ... 8	2.5 ... 8	1.5 ... 8	3 ... 8	
	External	[MPa]	0.15 ... 1	–0.09 ... 1			–0.09 ... 0.8	–0.09 ... 1
		[bar]	1.5 ... 10	–0.9 ... 10			–0.9 ... 8	–0.9 ... 10
Pilot pressure3)		[MPa]	0.15 ... 0.8	0.3 ... 0.8	0.25 ... 0.8	0.15 ... 0.8	0.3 ... 0.8	
		[bar]	1.5 ... 8	3 ... 8	2.5 ... 8	1.5 ... 8	3 ... 8	
Ambient temperature	VUVG-...	[°C]	–5 ... +50, with holding current reduction –5 ... +60					
	VUVG-...-P1	[°C]	–5 ... +50 for mounting on manifold rail –5 ... +60					
Temperature of medium	VUVG-...	[°C]	–5 ... +50, with holding current reduction –5 ... +60					
	VUVG-...-P1	[°C]	–5 ... +50 for mounting on manifold rail –5 ... +60					
Cleanroom class			ISO class 5					

1) Pneumatic spring
2) Mechanical spring
3) Minimum pilot pressure 50% of operating pressure

Electrical data			
Electrical connection	VUVG-...		Plug M8x1, A-coded to EN 61076-2-104, 3-pin
	VUVG-...-P1		Via electric pilot valve
Pilot interface	VUVG-...-P1		To ISO 15218
Operating voltage	VUVG-...	[V DC]	5, 12 and 24 ±10%
	VUVG-...-P1	[V DC]	12 and 24 ±10%
		[V AC]	24, 110 and 230 ±10%
Power	VUVG-...	[W]	1, reduced to 0.35 with holding current reduction
	VUVG-...-P1	[W]	1.3
Duty cycle		[%]	100
Degree of protection to EN 60529			
	VUVG-...		IP40 (with plug socket), IP65 (with M8)
	VUVG-...-P1		IP65, with electric pilot valve and plug socket

Information on materials	
Housing	Wrought aluminium alloy
Seals	HNBR, NBR
Note on materials	RoHs-compliant
LABS (PWIS) conformity	VDMA24364-B1/B2-L

Datasheet

Dimensions VUVG

Download CAD data ➔ www.festo.com

2x 3/2-way, 5/2-way and 5/3-way valve

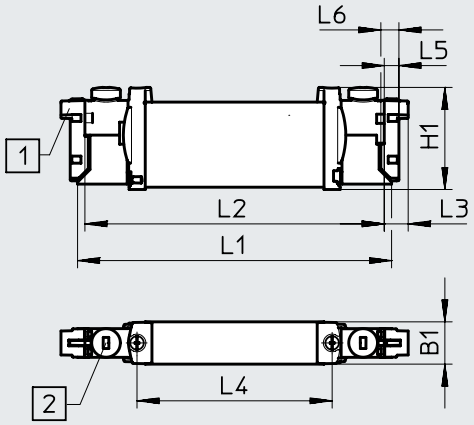

5/2-way valve, single solenoid

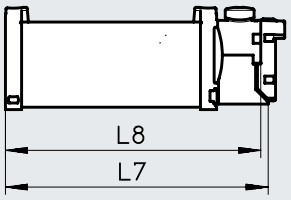

Note

More dimensions for E-boxes
a page 115

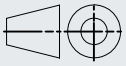

[1] Horizontal electrical connection [2] Manual override

Type	B1	H1	L1	L2	L3	L4	L5	L6	L7	L8
VUVG-B14 -...-F ...	14	34.8	107	102	8	66.5	4.9	6.2	89.5	87

Dimensions VUVG-...-P1

2x 3/2-way, 5/2-way and 5/3-way valve

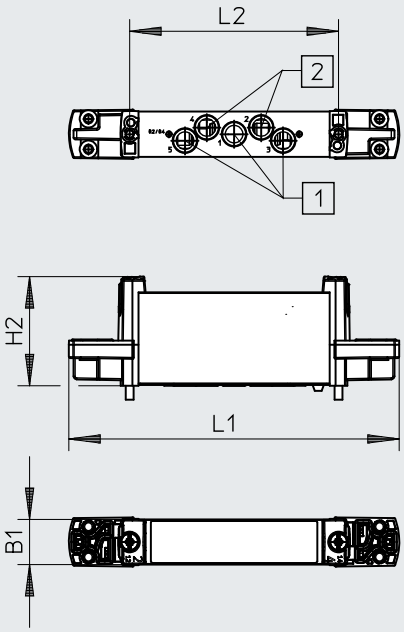

5/2-way valve, single solenoid

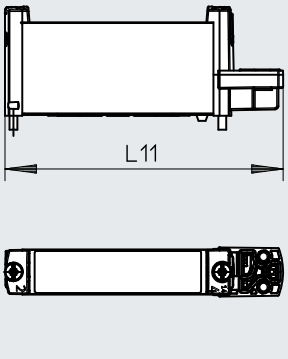

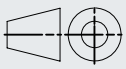

[1] Ports 1, 3 and 5 [2] Ports 2 and 4

Type	B1	H2	L1	L2	L11
VUVG-B14-...-P1	14.4	34.8	105.2	66.5	88.6

Ordering data

Ordering data

	Description		Part no.	Type
Sub-base valve G1/8, without E-box				
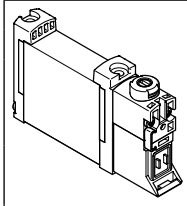	**2x 3/2-way valve**			
	External pilot air supply	Normally closed, pneumatic spring return	**566513**	**VUVG-B14-T32C-AZT-F-1P3**
		Normally open, pneumatic spring return	**566514**	**VUVG-B14-T32U-AZT-F-1P3**
		1x normally open, 1x normally closed, pneumatic spring return	**566515**	**VUVG-B14-T32H-AZT-F-1P3**
		Normally closed, mechanical spring return	**574376**	**VUVG-B14-T32C-MZT-F-1P3**
		Normally open, mechanical spring return	**574377**	**VUVG-B14-T32U-MZT-F-1P3**
		1x normally open, 1x normally closed, mechanical spring return	**574378**	**VUVG-B14-T32H-MZT-F-1P3**
	5/2-way valve, single solenoid			
	External pilot air supply	Pneumatic spring return	**566516**	**VUVG-B14-M52-AZT-F-1P3**
		Mechanical spring return	**574379**	**VUVG-B14-M52-MZT-F-1P3**
	5/2-way valve, double solenoid			
	External pilot air supply		**566517**	**VUVG-B14-B52-ZT-F-1P3**
	5/3-way valve			
	External pilot air supply	Mid-position closed, mechanical spring return	**566518**	**VUVG-B14-P53C-ZT-F-1P3**
		Mid-position exhausted, mechanical spring return	**566519**	**VUVG-B14-P53E-ZT-F-1P3**
		Mid-position pressurised, mechanical spring return	**566520**	**VUVG-B14-P53U-ZT-F-1P3**
Sub-base valve G1/8, with E-box R8				
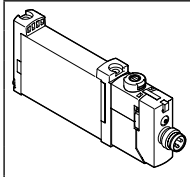	**2x 3/2-way valve**			
	External pilot air supply	Normally closed, pneumatic spring return	**574242**	**VUVG-B14-T32C-AZT-F-1R8L**
		Normally open, pneumatic spring return	**574243**	**VUVG-B14-T32U-AZT-F-1R8L**
		1x normally open, 1x normally closed, pneumatic spring return	**574244**	**VUVG-B14-T32H-AZT-F-1R8L**
		Normally closed, mechanical spring return	**578248**	**VUVG-B14-T32C-MZT-F-1R8L**
		Normally open, mechanical spring return	**8031517**	**VUVG-B14-T32U-MZT-F-1R8L**
		1x normally open, 1x normally closed, mechanical spring return	**8031518**	**VUVG-B14-T32H-MZT-F-1R8L**
	5/2-way valve, single solenoid			
	External pilot air supply	Pneumatic spring return	**574245**	**VUVG-B14-M52-AZT-F-1R8L**
		Mechanical spring return	**578158**	**VUVG-B14-M52-MZT-F-1R8L**
	5/2-way valve, double solenoid			
	External pilot air supply		**574246**	**VUVG-B14-B52-ZT-F-1R8L**
	5/3-way valve			
	External pilot air supply	Mid-position closed, mechanical spring return	**574247**	**VUVG-B14-P53C-ZT-F-1R8L**
		Mid-position exhausted, mechanical spring return	**574249**	**VUVG-B14-P53E-ZT-F-1R8L**
		Mid-position pressurised, mechanical spring return	**574248**	**VUVG-B14-P53U-ZT-F-1R8L**

Ordering data

Ordering data				
	Description		Part no.	Type
Sub-base valve G1/8, to ISO 15218				
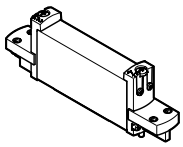	**2x 3/2-way valve**			
	External pilot air supply	Normally closed, pneumatic spring return	**8033535**	**VUVG-B14-T32C-AZ-F-P1**
		Normally open, pneumatic spring return	**8033536**	**VUVG-B14-T32U-AZ-F-P1**
		1x normally open, 1x normally closed, pneumatic spring return	**8033537**	**VUVG-B14-T32H-AZ-F-P1**
		Normally closed, mechanical spring return	**8033538**	**VUVG-B14-T32C-MZ-F-P1**
		Normally open, mechanical spring return	**8033539**	**VUVG-B14-T32U-MZ-F-P1**
		1x normally open, 1x normally closed, mechanical spring return	**8033540**	**VUVG-B14-T32H-MZ-F-P1**
	5/2-way valve, single solenoid			
	External pilot air supply	Pneumatic spring return	**8033541**	**VUVG-B14-M52-AZ-F-P1**
		Mechanical spring return	**8033542**	**VUVG-B14-M52-MZ-F-P1**
	5/2-way valve, double solenoid			
	External pilot air supply		**8033543**	**VUVG-B14-B52-Z-F-P1**
	5/3-way valve			
	External pilot air supply	Mid-position closed, mechanical spring return	**8033544**	**VUVG-B14-P53C-Z-F-P1**
		Mid-position exhausted, mechanical spring return	**8033545**	**VUVG-B14-P53E-Z-F-P1**
		Mid-position pressurised, mechanical spring return	**8033546**	**VUVG-B14-P53U-Z-F-P1**

Manifold assembly

Sub-base valve for
Manifold assembly
Connection G1/8

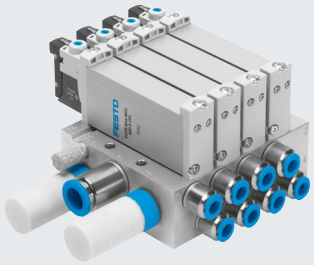

Dimensions

Download CAD data ➔ www.festo.com

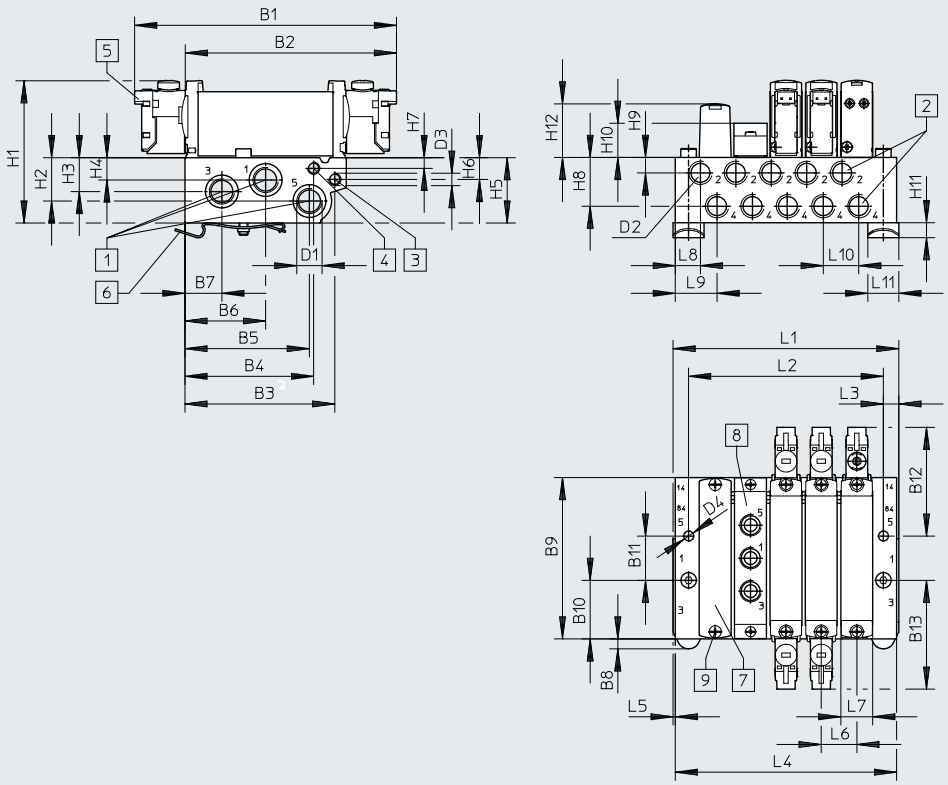

Note

More dimensions for
E-boxes
a page 115

[1] Ports 1, 3 and 5: G1/4 (at both ends)
[2] Ports 2, 4: G1/8
[3] Ports 12, 14: M5
[4] Ports 82, 84: M5
[5] Electrical connection for E-boxes and accessories
[6] DIN rail mounting (two M4x35 screws are required for mounting)
[7] Cover plate
[8] Supply plate: ports 1, 3 and 5: G1/8
[9] Valves/cover plate mounting on manifold rail: thread M2.5

Type	B1	B2	B3	B4	B5	B6	B7	B8	B9	B10	B11	B12
VABM-L1-14W-G14	118.3	95.1	67.7	58.2	56.3	36.6	16.7	4.5	72.9	26.5	20	49.1

Type	B13	D1	D2	D3	D4	H1	H2	H3	H4	H5
VABM-L1-14W-G14	49.1	G1/4	G1/8	M5	Ø 4.5	64.3	19.6	15.3	10.1	29.5

Type	H6	H7	H8	H9	H10	H11	H12	L3	L5	L6	L7	L8	L9	L10	L11
VABM-L1-14W-G14	9.8	4.8	22.1	7	15.4	6.8	23.9	6	1	16	14.4	11.3	18.5	16	14

Valve positions	2	3	4	5	6	7	8	9	10	12	14	16
L1	56.3	72.3	88.3	104.3	120.3	136.3	152.3	168.3	184.3	216.3	248.3	280.3
L2	40	56	72	88	104	120	136	152	168	200	232	264
L4	54.3	70.3	86.3	102.3	118.3	134.3	150.3	166.3	182.3	214.3	246.6	278.3
VABM weight [g]	232	306	380	454	528	602	676	750	824	972	1120	1268

Ordering data

Technical data – Manifold rails1)

	Connection			CRC	Materials3)	Operating pressure		Max. tightening torque for mounting [Nm]		
	2, 4	1, 3, 5	12/14, 82/84			[MPa]	[bar]	Valve	DIN rail	Wall
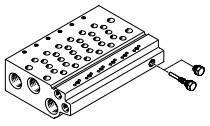	G1/8	G1/4	M5	2[2)]	Wrought aluminium alloy	–0.09 ... 1	–0.9 ... 10	0.65	1.5	3

1) Blanking plugs are included with the manifold rail.
2) More information www.festo.com/x/topic/crc
3) Information on materials: RoHS-compliant.

Ordering data – Manifold rail

	Description		Part no.	Type
Manifold rail for sub-base valve G1/8				
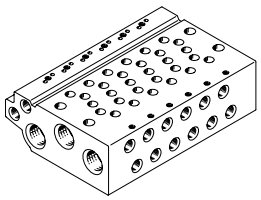	For size B14 (G1/8)	2 valve positions	**566642**	**VABM-L1-14W-G14-2**
		3 valve positions	**566643**	**VABM-L1-14W-G14-3**
		4 valve positions	**566644**	**VABM-L1-14W-G14-4**
		5 valve positions	**566645**	**VABM-L1-14W-G14-5**
		6 valve positions	**566646**	**VABM-L1-14W-G14-6**
		7 valve positions	**566647**	**VABM-L1-14W-G14-7**
		8 valve positions	**566648**	**VABM-L1-14W-G14-8**
		9 valve positions	**566649**	**VABM-L1-14W-G14-9**
		10 valve positions	**566650**	**VABM-L1-14W-G14-10**
		12 valve positions	**566651**	**VABM-L1-14W-G14-12**
		14 valve positions	**566652**	**VABM-L1-14W-G14-14**
		16 valve positions	**566653**	**VABM-L1-14W-G14-16**

Ordering data – Accessories

	Description		Part no.	Type
Cover plate				Datasheets a Internet: vabb
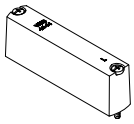	For valve position on manifold rail, including screws and seal	–	**569989**	**VABB-L1-14**
		Suitable for battery manufacturing	**8168539**	**VABB-L1-14-F1A**
Separator				Datasheets a Internet: vabd
	For creating pressure zones		**569996**	**VABD-10-B**
Supply plate				Datasheets a Internet: vabf
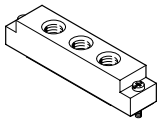	For valve position on manifold rail, including screws and seal	–	**569993**	**VABF-L1-14-P3A4-G18**
		Suitable for battery manufacturing	**8163544**	**VABF-L1-14-P3A4-G18-F1A**
Seals				Datasheets a Internet: vabd
	For sub-base valves G1/8	Delivery quantity: 10 sets (each with 2 screws and 1 seal)	**566676**	**VABD-L1-14B-S-G18**

Datasheet

Function
2x 3/2C, 2x 3/2U, 2x 3/2H
5/2-way, single solenoid
5/2-way, double solenoid valve
5/3C, 5/3U, 5/3E

Circuit diagrams a Page 14

- Size 18 mm
- Flow rate
  800 ... 1150 l/min
- Voltage
  5, 12 and 24 V DC
- Voltage VUVG-...-P1
  12 and 24 V DC
  24, 110 and 230 V AC

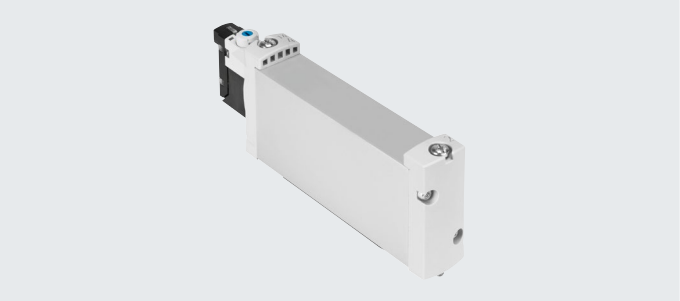

General technical data VUVG-B														
Valve function			T32-A			T32-M			M52-R	B52	M52-M	P53		
Normal position			C1)	U2)	H4)	C1)	U2)	H4)	–	–	–	C1)	U2)	E3)
Stable position			Monostable							Bistable	Monostable	Monostable		
Pneumatic spring return			Yes			No			Yes5)	–	No	–		
Mechanical spring return			No			Yes			Yes5)	–	Yes	Yes		
Vacuum operation at port 1			No			Only with external pilot air supply								
Design			Piston spool											
Sealing principle			Soft											
Actuation type			Electrical											
Type of control			Piloted											
Pilot air supply			External, internal; can be selected via sub-base											
Exhaust air function			Can be throttled											
Manual override	VUVG-...		Choice of non-detenting, covered, non-detenting/detenting or detenting											
	VUVG-...-P1		–											
Type of mounting			On manifold rail											
Mounting position			Any											
Nominal width		[mm]	5.7						6.9	7.3	6.9	6.5		
Standard nominal flow rate		[l/min]	900						1150			1080		
Flow rate on manifold rail			800						1000			950		
Switching time														
VUVG-...	On/off	[ms]	13/27			15/22			15/31	–	10/45	15/48		
	Changeover	[ms]	–							11		29		
VUVG-...-P1	On/off	[ms]	13/18			13/27			16/22	–	14/26	15/32		
	Changeover	[ms]	–							12	–	21		
Size		[mm]	18											
Connection	1, 3, 5		G3/8 in manifold rail											
	2, 4		G1/4 in manifold rail											
	12/14, 82/84		M5 in manifold rail											
Product weight	VUVG-...	[g]	164						154	160	154	160		
	VUVG-...-P1	[g]	140						142	140	142	136		
Certificate-issuing authority	VUVG-...-P1		UL MH19482											
Certification	VUVG-...		RCM											
	VUVG-...		c UL us – Recognized (OL)											
	VUVG-...-P1													
CE marking (see declaration of conformity)6)														
	VUVG-...		To EU EMC Directive											
	VUVG-...-P1		To EU Low Voltage Directive											
Corrosion resistance class CRC7)			2											

1) C=Normally closed/mid-position closed
2) U=Normally open/mid-position pressurised
3) E=Mid-position exhausted
4) H=2x 3/2-way valve in one housing with 1x normally closed and 1x normally open
5) Combined reset method
6) For information about the area of use, see the EC declaration of conformity at: www.festo.com/catalogue/... d Support/Downloads.
   If the devices are subject to usage restrictions in residential, commercial or light-industrial environments, further measures for the reduction of the emitted interference may be necessary.
7) More information www.festo.com/x/topic/crc

Datasheet

Operating and environmental conditions								
Valve function			T32-A1)	T32-M3)	M52-R2)	B52	M52-M3)	P53
Operating medium			Compressed air to ISO 8573-2010 [7:4:4]					
Operating pressure	Internal	[MPa]	0.15 ... 0.8	0.3 ... 0.8	0.25 ... 0.8	0.15 ... 0.8	0.3 ... 0.8	
		[bar]	1.5 ... 8	3 ... 8	2.5 ... 8	1.5 ... 8	3 ... 8	
	External	[MPa]	0.15 ... 1	–0.09 ... 1			–0.09 ... 1	–0.09 ... 1
		[bar]	1.5 ... 10	–0.9 ... 10			–0.9 ... 10	–0.9 ... 10
Pilot pressure		[MPa]	0.15 ... 0.8	0.2 ... 0.8	0.25 ... 0.8	0.15 ... 0.8	0.3 ... 0.8	
		[bar]	1.5 ... 8	2 ... 8	2.5 ... 8	1.5 ... 8	3 ... 8	
Ambient temperature	VUVG-...	[°C]	–5 ... +50, with holding current reduction –5 ... +60					
	VUVG-...-P1	[°C]	–5 ... +60					
Temperature of medium	VUVG-...	[°C]	–5 ... +50, with holding current reduction –5 ... +60					
	VUVG-...-P1	[°C]	–5 ... +60					
Cleanroom class			ISO class 5					

1) Pneumatic spring
2) Mixed, pneumatic/mechanical spring
3) Mechanical spring

Electrical data			
Electrical connection	VUVG-...		Plug M8x1, A-coded to EN 61076-2-104, 3-pin
	VUVG-...-P1		Via electric pilot valve
Pilot interface	VUVG-...-P1		To ISO 15218
Operating voltage	VUVG-...	[V DC]	5, 12 and 24 ±10%
	VUVG-...-P1	[V DC]	12 and 24 ±10%
		[V AC]	24, 110 and 230 ±10%
Power	VUVG-...	[W]	1, reduced to 0.35 with holding current reduction
	VUVG-...-P1	[W]	1.3
Duty cycle		[%]	100
Degree of protection to EN 60529			
	VUVG-...		IP40 (with plug socket), IP65 (with M8)
	VUVG-...-P1		IP65, with electric pilot valve and plug socket

Information on materials	
Housing	Wrought aluminium alloy
Seals	HNBR, NBR
Note on materials	RoHs-compliant
LABS (PWIS) conformity	VDMA24364-B1/B2-L

Dimensions VUVG-B18-...F-... Download CAD data ➔ www.festo.com

2x 3/2-way, 5/2-way and 5/3-way valve

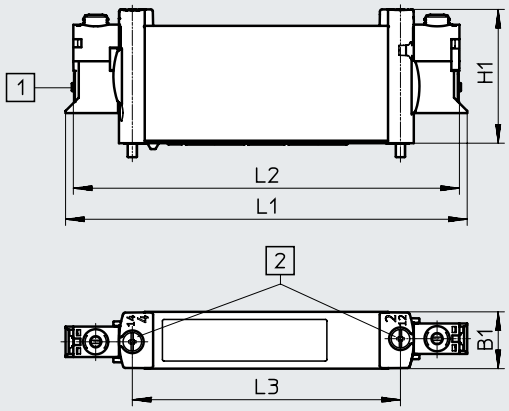

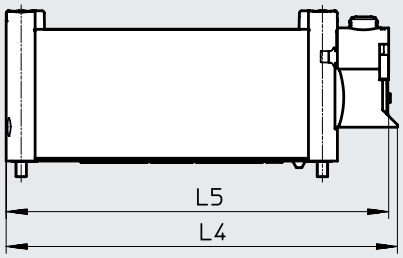

Note
More dimensions for E-boxes
a page 115

[1] Horizontal electrical connection [2] Manual override

Type	B1	H1	L1	L2	L3	L4	L5
VUVG-B18 -...-F...	18.3	43.1	129.4	124.4	86.4	112.2	109.7

Datasheet

Dimensions VUVG-B18-...-F-P1 Download CAD data ➔ www.festo.com

2x 3/2-way, 5/2-way and 5/3-way valve

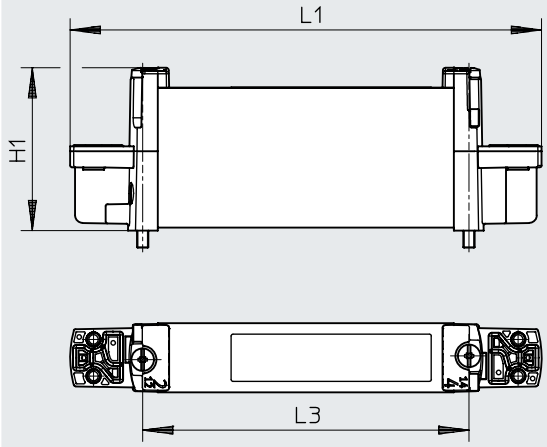

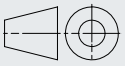

Type	H1	L1	L3
VUVG-B18-...-F-P1	43.1	124.8	86.4

Ordering data

Ordering data

	Description		Part no.	Type
Sub-base valve G1/4, without E-box				
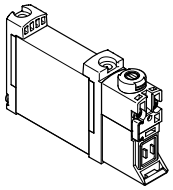	**2x 3/2-way valve**			
	External pilot air supply	Normally closed, pneumatic spring return	**574443**	**VUVG-B18-T32C-AZT-F-1P3**
		Normally open, pneumatic spring return	**574444**	**VUVG-B18-T32U-AZT-F-1P3**
		1x normally open, 1x normally closed, pneumatic spring return	**574445**	**VUVG-B18-T32H-AZT-F-1P3**
		Normally closed, mechanical spring return	**574446**	**VUVG-B18-T32C-MZT-F-1P3**
		Normally open, mechanical spring return	**574447**	**VUVG-B18-T32U-MZT-F-1P3**
		1x normally open, 1x normally closed, mechanical spring return	**574448**	**VUVG-B18-T32H-MZT-F-1P3**
	5/2-way valve, single solenoid			
	External pilot air supply	Pneumatic/mechanical spring return	**574449**	**VUVG-B18-M52-RZT-F-1P3**
		Mechanical spring return	**574450**	**VUVG-B18-M52-MZT-F-1P3**
	5/2-way valve, double solenoid			
	External pilot air supply		**574451**	**VUVG-B18-B52-ZT-F-1P3**
	5/3-way valve			
	External pilot air supply	Mid-position closed, mechanical spring return	**574452**	**VUVG-B18-P53C-ZT-F-1P3**
		Mid-position exhausted, mechanical spring return	**574453**	**VUVG-B18-P53E-ZT-F-1P3**
		Mid-position pressurised, mechanical spring return	**574454**	**VUVG-B18-P53U-ZT-F-1P3**
Sub-base valve G1/4, with E-box R8				
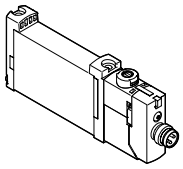	**2x 3/2-way valve**			
	External pilot air supply	Normally closed, pneumatic spring return	**8031537**	**VUVG-B18-T32C-AZT-F-1R8L**
		Normally open, pneumatic spring return	**8031538**	**VUVG-B18-T32U-AZT-F-1R8L**
		1x normally open, 1x normally closed, pneumatic spring return	**8031539**	**VUVG-B18-T32H-AZT-F-1R8L**
		Normally closed, mechanical spring return	**8031540**	**VUVG-B18-T32C-MZT-F-1R8L**
		Normally open, mechanical spring return	**8031541**	**VUVG-B18-T32U-MZT-F-1R8L**
		1x normally open, 1x normally closed, mechanical spring return	**8031542**	**VUVG-B18-T32H-MZT-F-1R8L**
	5/2-way valve, single solenoid			
	External pilot air supply	Pneumatic/mechanical spring return	**8031543**	**VUVG-B18-M52-RZT-F-1R8L**
		Mechanical spring return	**8031544**	**VUVG-B18-M52-MZT-F-1R8L**
	5/2-way valve, double solenoid			
	External pilot air supply		**8031545**	**VUVG-B18-B52-ZT-F-1R8L**
	5/3-way valve			
	External pilot air supply	Mid-position closed, mechanical spring return	**8031546**	**VUVG-B18-P53C-ZT-F-1R8L**
		Mid-position exhausted, mechanical spring return	**8031547**	**VUVG-B18-P53E-ZT-F-1R8L**
		Mid-position pressurised, mechanical spring return	**8031548**	**VUVG-B18-P53U-ZT-F-1R8L**

Ordering data

Ordering data

	Description		Part no.	Type
Sub-base valve G1/4, to ISO 15218				
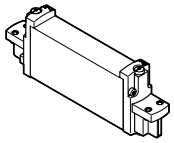	**2x 3/2-way valve**			
	External pilot air supply	Normally closed, mechanical spring return	**8033559**	**VUVG-B18-T32C-AZ-F-P1**
		Normally open, mechanical spring return	**8033560**	**VUVG-B18-T32U-AZ-F-P1**
		Normally open/closed, mechanical spring return	**8033561**	**VUVG-B18-T32H-AZ-F-P1**
		Normally closed, single solenoid, mechanical spring return	**8033562**	**VUVG-B18-T32C-MZ-F-P1**
		Normally open, single solenoid, mechanical spring return	**8033563**	**VUVG-B18-T32U-MZ-F-P1**
		Normally open/closed, single solenoid, mechanical spring return	**8033564**	**VUVG-B18-T32H-MZ-F-P1**
	5/2-way valve, single solenoid			
	External pilot air supply	Mechanical spring return	**8033565**	**VUVG-B18-M52-RZ-F-P1**
			8033566	**VUVG-B18-M52-MZ-F-P1**
	5/2-way valve, double solenoid			
	External pilot air supply		**8033567**	**VUVG-B18-B52-Z-F-P1**
	5/3-way valve			
	External pilot air supply	Normally closed, mechanical spring return	**8033568**	**VUVG-B18-P53C-Z-F-P1**
		Mid-position exhausted, mechanical spring return	**8033569**	**VUVG-B18-P53E-Z-F-P1**
		Mid-position pressurised, mechanical spring return	**8033570**	**VUVG-B18-P53U-Z-F-P1**

Manifold assembly

Sub-base valve for
Manifold assembly
Connection G1/4

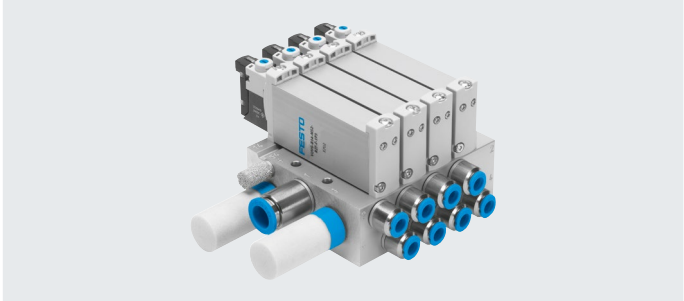

Dimensions Download CAD data ➔ www.festo.com

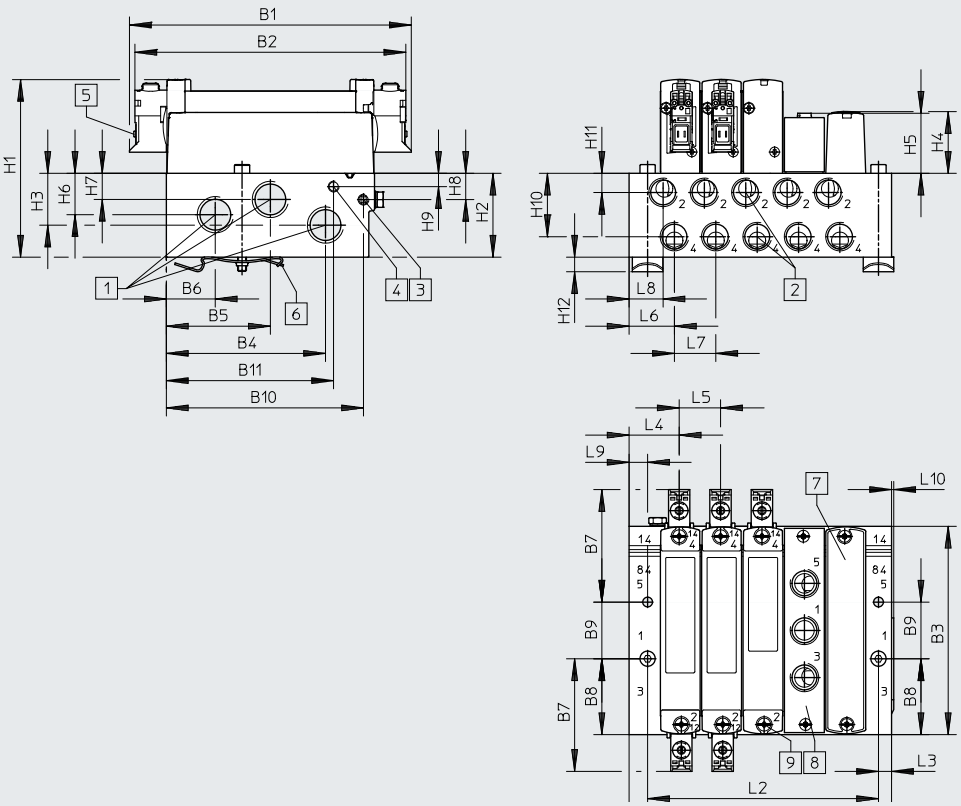

Note

More dimensions for E-boxes
a page 115

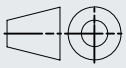

[1] Ports 1, 3 and 5: G3/8 (at both ends)
[2] Ports 2, 4: G1/4
[3] Ports 12, 14: M5
[4] Ports 82, 84: M5
[5] Electrical connection for E-boxes and accessories
[6] DIN rail mounting (two M4x40 screws are required for mounting)
[7] Cover plate
[8] Supply plate, ports 1, 3 and 5: G1/4
[9] Valve/cover plate/supply plate mounting on manifold rail: M3 thread

Type	B1	B2	B3	B4	B5	B6	B7	B8	B9	B10	B11	D1
VABM-L1-18W-G38	129.4	124.4	95.6	73.1	47.8	22.5	51.7	34.8	26	90.6	76.8	4.5

Type	H1	H2	H3	H4	H5	H6	H7	H8	H9	H10	H11	H12
VABM-L1-18W-G38	81.6	38.5	11.5	28.4	27.6	19	12	12.1	6.1	29.1	8.8	6.5

Type	L3	L4	L5	L6	L7	L8	L9	L10
VABM-L1-18W-G38	6	23	19	20.8	19	15.6	8.5	1

Valve positions	2	3	4	5	6	7	8	9	10	12	14	16
L1	63.5	82.5	101.5	120.5	139.5	158.5	177.5	196.5	215.5	253.5	291.5	329.5
L2	49	68	87	106	125	144	163	182	201	239	277	315
VABM weight [g]	232	306	380	454	528	602	676	750	824	972	1120	1268

Ordering data

Technical data – Manifold rails1)

	Connection			CRC	Materials3)	Operating pressure		Max. tightening torque for mounting [Nm]		
	2, 4	1, 3, 5	12/14, 82/84			[MPa]	[bar]	Valve	DIN rail	Wall
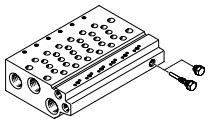	G1/4	G3/8	M5	2[2)]	Wrought aluminium alloy	–0.09 ... 1	–0.9 ... 10	1.18	1.5	3

1) Blanking plugs are included with the manifold rail.
2) More information www.festo.com/x/topic/crc
3) Information on materials: RoHS-compliant.

Ordering data – Manifold rails

	Description		Part no.	Type
Manifold rail for sub-base valve G1/4				
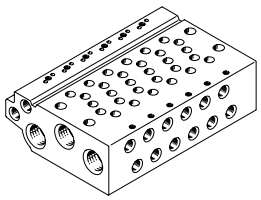	For size B18 (G1/4)	2 valve positions	**574467**	**VABM-L1-18W-G38-2**
		3 valve positions	**574468**	**VABM-L1-18W-G38-3**
		4 valve positions	**574469**	**VABM-L1-18W-G38-4**
		5 valve positions	**574470**	**VABM-L1-18W-G38-5**
		6 valve positions	**574471**	**VABM-L1-18W-G38-6**
		7 valve positions	**574472**	**VABM-L1-18W-G38-7**
		8 valve positions	**574473**	**VABM-L1-18W-G38-8**
		9 valve positions	**574474**	**VABM-L1-18W-G38-9**
		10 valve positions	**574475**	**VABM-L1-18W-G38-10**
		12 valve positions	**574476**	**VABM-L1-18W-G38-12**
		14 valve positions	**574477**	**VABM-L1-18W-G38-14**
		16 valve positions	**574478**	**VABM-L1-18W-G38-16**

Ordering data

Ordering data – Accessories

	Description		Part no.	Type
Cover plate				Datasheets a Internet: vabb
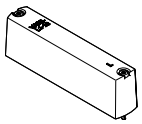	For valve position on manifold rail, including screws and seal		**574482**	**VABB-L1-18**
Separator				Datasheets a Internet: vabd
	For creating pressure zones		**574483**	**VABD-14-B**
Supply plate				Datasheets a Internet: vabf
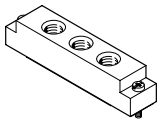	For valve position on manifold rail, including screws and seal		**574481**	**VABF-L1-18-P3A4-G14**
Seals				Datasheets a Internet: vabd
	For sub-base valves G1/4	Delivery quantity: 10 sets (each with 2 screws and 1 seal)	**574480**	**VABD-L1-18B-S-G14**

Note

Connect supply plate at port 1 with compressed air. Reverse operation (pressure at port 3, 5) is not permissible.

E-boxes

General technical data Variants	H2	H3	S2	S3	L-	R1	R8	R3
Mounting position	Any							
Electrical connection	2-pin, socket				Flying leads	M8 individual plug, 4-pin	M8 individual plug, 3-pin	M12, single plug, 4-pin
Degree of protection	IP40					IP65		IP65
Signal status indication	LED							
Type of mounting	Clip					Self-tapping screw		On solenoid valve via self-tapping screw
Note on materials	RoHs-compliant							
Housing colour	Black							
Information on materials: Housing	PA							
Certification	RCM							

Protective circuit without holding current reduction

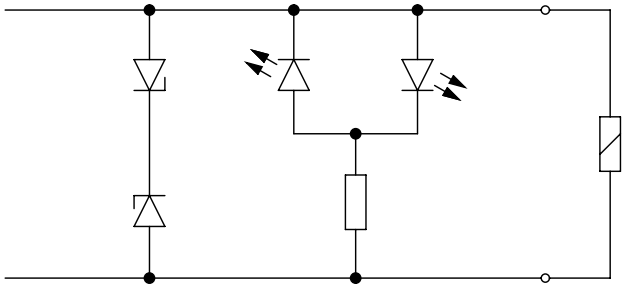

The solenoid coils (P-type) of the 5, 12 and 24 V designs have a protective circuit to arrest sparks and protect against polarity reversal.

Protective circuit with holding current reduction

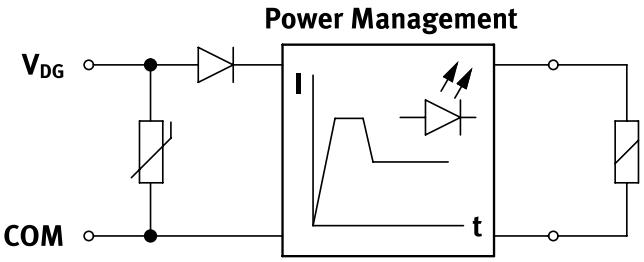

The 24 V DC design (R type) additionally features holding current reduction. This reduces the power from 1 W to 0.35 W.

Pin assignment for E-box

	Pin		Description
Rectangular plug, connection pattern H			
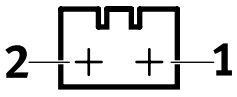	**VAVE-L1-1VH2-LP, VAVE-L1-1VH3-LP**		
	1	+ or –	Without holding current reduction
	2	+ or –	
	VAVE-L1-1H2-LR, VAVE-L1-1H3-LR		
	1	+	With holding current reduction
	2	–	
Rectangular plug, connection pattern S			
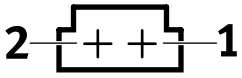	**VAVE-L1-1VS2-LP, VAVE-L1-1VS3-LP**		
	1	+ or –	Without holding current reduction
	2	+ or –	
	VAVE-L1-1S2-LR, VAVE-L1-1S3-LR		
	1	–	With holding current reduction
	2	+	
Stranded conductor, 2-pin			
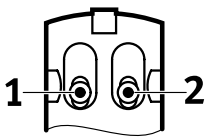	**VAVE-L1-1VL1...4- LP**		
	1	+ or –	Without holding current reduction
	2	+ or –	
	VAVE-L1-1L1...4-LR		
	1	–	With holding current reduction
	2	+	

E-boxes

Pin assignment for E-box

	Pin		Description
Round plug, M8, 3-pin			
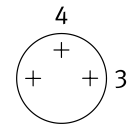	**VAVE-L1-1VR8-LP**		
	1	Not used	Without holding current reduction
	3	+ or –	
	4	+ or –	
	VAVE-L1-1R8-LR		
	1	Not used	With holding current reduction
	3	+ or –	
	4	+ or –	
Round plug, M8, 4-pin			
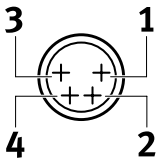	**VAVE-L1-1VR1-LP**		
	1	Not used	Without holding current reduction
	2	Not used	
	3	+ or –	
	4	+ or –	
	VAVE-L1-1R1-LR		
	1	Not used	With holding current reduction
	2	Not used	
	3	+ or –	
	4	+ or –	
Round plug, M12, 4-pin			
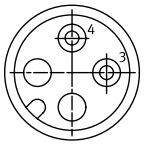	**VAVE-L1-1VR3-LR**		
	1	Not used	With holding current reduction
	2	Not used	
	3	+ or –	
	4	+ or –	
Open cable end			
	**VAVE-L1-1VK...**		
	BK	+ or –	Without holding current reduction
	BK	+ or –	
	VAVE-L1-1K...		
	BK	+ or –	With holding current reduction
	BK	+ or –	
Push-in spring-loaded terminal			
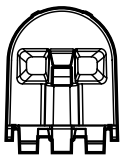	–	+ or –	Without holding current reduction

E-boxes

Dimensions Download CAD data ➔ www.festo.com

E-boxes, S2/H2

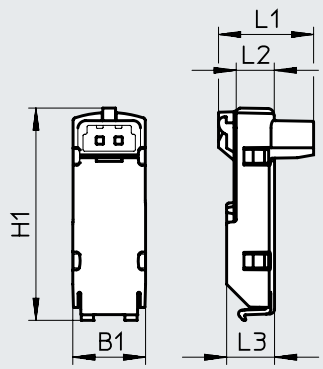

E-boxes, S3/H3

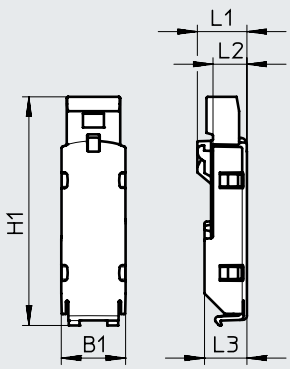

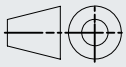

Type	B1	H1 ±0.5	L1	L2	L3
VAVE-L1-1VS2-LP	9.8	28.8	12.9	5.2	6.5
VAVE-L1-1S2-LR					
VAVE-L1-1VH2-LP			10.8		
VAVE-L1-H2-LR					

Type	B1	H1 ±0.5	L1	L2	L3
VAVE-L1-1VS3-LP	9.8	35	7.6	5.2	6.5
VAVE-L1-1S3-LR					
VAVE-L1-1VH3-LP		33.6	7.5		
VAVE-L1-1H3-LR					

Dimensions Download CAD data ➔ www.festo.com

E-boxes, VL11 ...1 4

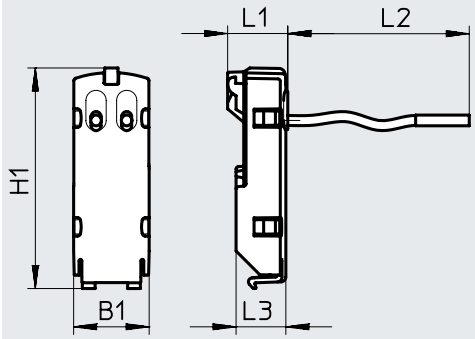

E-boxes, VK6 ... 9

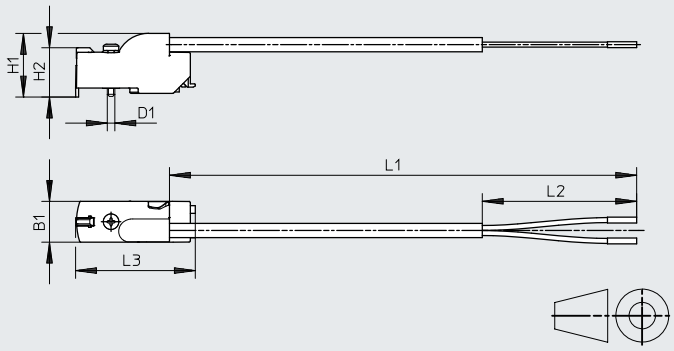

Type	B1	H1 ±0.5	L1	L2	L3
VAVE-L1-1VL1-LP	9.8	28.8	7.9	0.5	6.5
VAVE-L1-1L1-LR					
VAVE-L1-1VL2-LP				1	
VAVE-L1-1L2-LR					
VAVE-L1-1VL3-LP				2.5	
VAVE-L1-1L3-LR					
VAVE-L1-1VL4-LP				5	
VAVE-L1-1L4-LR					

Type	B1	H1	H2 ±0.3	L1	L2 ±5	L3 ±0.5	D1 Ø
VAVE-L1-1VK6-LP	9.8	15.3	11.8	0.5	50	28.7	1.8
VAVE-L1-1VK7-LP				1.0			
VAVE-L1-1VK8-LP				2.5			
VAVE-L1-1VK9-LP				5.0			
VAVE-L1-1K6-LR				0.5			
VAVE-L1-1K7-LR				1.0			
VAVE-L1-1K8-LR				2.5			
VAVE-L1-1K9-LR				5.0			

E-boxes

Dimensions Download CAD data ➔ www.festo.com

E-boxes, R8

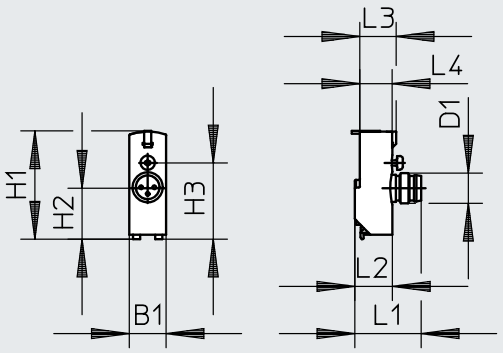

E-boxes, R1

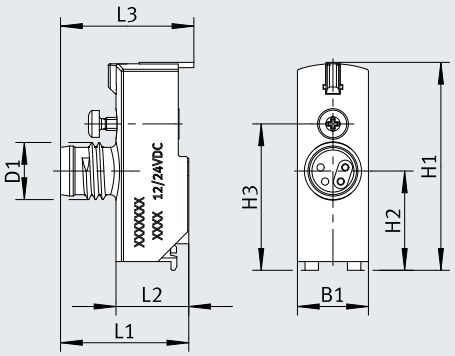

Type	B1	H1	H2	H3	L1	L2	L3	L4	D1 ø
VAVE-L1-1VR8-LP	9.8	28.7	13.7	20.2	18.4	9.9	9.7	8.6	M8

Type	B1	H1	H2	H3	L1	L2	L3	D1 ø
VAVE-L1-1R1-LP	9.8	28.7	13.7	20.2	17.7	10.1	18.4	M8
VAVE-L1-1VR1-LP								

Dimensions Download CAD data ➔ www.festo.com

E-boxes, R3

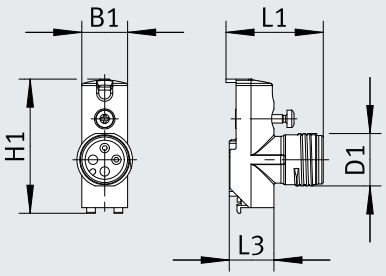

E-boxes, C8

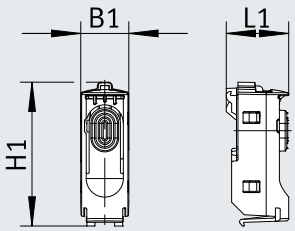

Type	B1	H1	L1	L3	D1
VAVE-L1-1R3-LR	9.8	28.7	20.8	~9.6	M12x1
VAVE-L1-1VR3-LP					

Type	B1	H1	L1
VAVE-L1-1VC8-LP	9.9	12.9	29.5

E-boxes

Ordering data – E-boxes

Design	Plug	Contacts	Additional functions	Ambient temperature [°C]	Code	Power [W]	Voltage [V DC]	Part no.	Type
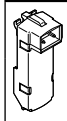	NEBV-H1 ...	2-pin	Spark arresting, bipolar, IP40	–5 ... +50	H2	1	12/24	**566714**	**VAVE-L1-1VH2-LP**
			Spark arresting, holding current reduction, IP40	–5 ... +60	H2R	0.35	24	**566716**	**VAVE-L1-1H2-LR**
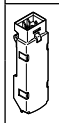	NEBV-H1 ...	2-pin	Spark arresting, bipolar, IP40	–5 ... +50	H3	1	12/24	**566715**	**VAVE-L1-1VH3-LP**
			Spark arresting, holding current reduction, IP40	–5 ... +60	H3R	0.35	24	**566717**	**VAVE-L1-1H3-LR**
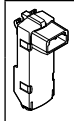	NEBV-HS ...	2-pin	Spark arresting, bipolar, IP40	–5 ... +50	S2	1	12/24	**566718**	**VAVE-L1-1VS2-LP**
			Spark arresting, holding current reduction, IP40	–5 ... +60	S2R	0.35	24	**566720**	**VAVE-L1-1S2-LR**
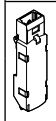	NEBV-HS ...	2-pin	Spark arresting, bipolar, IP40	–5 ... +50	S3	1	12/24	**566719**	**VAVE-L1-1VS3-LP**
			Spark arresting, holding current reduction, IP40	–5 ... +60	S3R	0.35	24	**566721**	**VAVE-L1-1S3-LR**
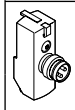	NEBA-M8 ...	3-pin	Spark arresting, bipolar, IP65	–5 ... +60	R8	1	12/24	**573919**	**VAVE-L1-1VR8-LP**
			Spark arresting, bipolar, holding current reduction, IP65		R8R	0.35	24	**573920**	**VAVE-L1-1R8-LR**
		4-pin	Spark arresting, bipolar, IP65		R1	1	12/24	**573921**	**VAVE-L1-1VR1-LP**
			Spark arresting, bipolar, holding current reduction, IP65		R1R	0.35	24	**573922**	**VAVE-L1-1R1-LR**

Ordering data – E-boxes

Design	Plug	Contacts	Additional functions	Ambient temperature [°C]	Code	Power [W]	Voltage [V DC]	Part no.	Type
	Open cable end	1-core	Spark arresting, bipolar, IP40	–5 ... +50	L1	1	12/24	**566722**	**VAVE-L1-1VL1-LP**
					L2			**566723**	**VAVE-L1-1VL2-LP**
					L3			**566724**	**VAVE-L1-1VL3-LP**
					L4			**566725**	**VAVE-L1-1VL4-LP**
			Spark arresting, holding current reduction, IP40	–5 ... +60	L1R	0.35	24	**566726**	**VAVE-L1-1L1-LR**
					L2R			**566727**	**VAVE-L1-1L2-LR**
					L3R			**566728**	**VAVE-L1-1L3-LR**
					L4R			**566729**	**VAVE-L1-1L4-LR**
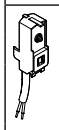	Open cable end	2-core	Spark arresting, bipolar, IP65	–5 ... +60	K6	1	12/24	**573941**	**VAVE-L1-1VK6-LP**
					K7			**573942**	**VAVE-L1-1VK7-LP**
					K8			**573943**	**VAVE-L1-1VK8-LP**
					K9			**573944**	**VAVE-L1-1VK9-LP**
			Spark arresting, bipolar, holding current reduction, IP65	–5 ... +60	K6R	0.35	24	**573945**	**VAVE-L1-1K6-LR**
					K7R			**573946**	**VAVE-L1-1K7-LR**
					K8R			**573947**	**VAVE-L1-1K8-LR**
					K9R			**573948**	**VAVE-L1-1K9-LR**
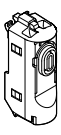	Push-in spring-loaded terminal	–	Spark arresting, bipolar, IP20	–5 ... +50	C8)	–	12/24	**8238550**	**VAVE-L1-1VC8-LP**

E-boxes

Ordering data – Pilot controls

Design	Electrical connection	Manual override	Ambient temperature [°C]	Voltage [V DC]	Voltage [V AC]	Part no.	Type
	Type C to DIN EN 175301-803	Non-detenting	–5 ... +50	24	–	**8040564**	**VSCS-B-M32-MH-WA-1C1-8**
				12	–	**8040565**	**VSCS-B-M32-MH-WA-5C1-8**
				–	24	**8040566**	**VSCS-B-M32-MH-WA-1AC1-8**
				–	110	**8040567**	**VSCS-B-M32-MH-WA-2AC1-8**
				–	230	**8040568**	**VSCS-B-M32-MH-WA-3AC1-8**
	Type C to industry standard			24	–	**8137327**	**VSCS-B-M32-MH-WA-1E1-8**
	M12 to IEC 61076-2-101			24	–	**8040569**	**VSCS-B-M32-MH-WA-1R3-8**
	Type C to DIN EN 175301-803	Non-detenting/detenting		24	–	**8040570**	**VSCS-B-M32-MD-WA-1C1-8**
				12	–	**8040571**	**VSCS-B-M32-MD-WA-5C1-8**
				–	24	**8040572**	**VSCS-B-M32-MD-WA-1AC1-8**
				–	110	**8040573**	**VSCS-B-M32-MD-WA-2AC1-8**
				–	230	**8040574**	**VSCS-B-M32-MD-WA-3AC1-8**
	Type C to industry standard			24	–	**8137328**	**VSCS-B-M32-MD-WA-1E1-8**
	M12 to IEC 61076-2-101			24	–	**8040575**	**VSCS-B-M32-MD-WA-1R3-8**

Accessories

Ordering data

	Description	Cable length [m]	Part no.	Type
Plug socket with cable, not sheathed, open end				Datasheets a Internet: nebv
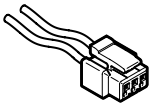	For E-box code H2, H2R or H3, H3R, 2-pin socket	0.5	**566654**	**NEBV-H1G2-KN-0.5-N-LE2**
		1	**566655**	**NEBV-H1G2-KN-1-N-LE2**
		2.5	**566656**	**NEBV-H1G2-KN-2.5-N-LE2**
		5	**566657**	**NEBV-H1G2-KN-5-N-LE2**
Plug socket with cable, sheathed, open end				Datasheets a Internet: nebv
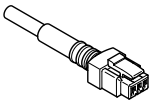	For E-box code H2, H2R or H3, H3R, 2-pin socket	0.5	**566658**	**NEBV-H1G2-P-0.5-N-LE2**
		1	**566659**	**NEBV-H1G2-P-1-N-LE2**
		2.5	**566660**	**NEBV-H1G2-P-2.5-N-LE2**
		5	**566661**	**NEBV-H1G2-P-5-N-LE2**
Plug socket with cable, not sheathed, open end				Datasheets a Internet: nebv
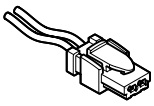	For E-box code S2, S2R or S3, S3R, 2-pin socket,	0.5	**566662**	**NEBV-HSG2-KN-0.5-N-LE2**
		1	**566663**	**NEBV-HSG2-KN-1-N-LE2**
		2.5	**566664**	**NEBV-HSG2-KN-2.5-N-LE2**
		5	**566665**	**NEBV-HSG2-KN-5-N-LE2**
Plug socket with cable, sheathed, open end				Datasheets a Internet: nebv
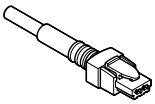	For E-box code S2, S2R or S3, S3R, 2-pin socket	0.5	**566666**	**NEBV-HSG2-P-0.5-N-LE2**
		1	**566667**	**NEBV-HSG2-P-1-N-LE2**
		2.5	**566668**	**NEBV-HSG2-P-2.5-N-LE2**
		5	**566669**	**NEBV-HSG2-P-5-N-LE2**
Connecting cable, open end				
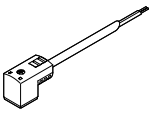	For pilot valve VSCS to ISO 15218, narrow socket, type C to EN 175301-803	2.5	**8032623**	**NEBV-C1SW2L-P-K-2.5-N-LE2-S9**
		5	**8032626**	**NEBV-C1SW2L-P-K-5-N-LE2-S9**
		10	**8032627**	**NEBV-C1SW2L-P-K-10-N-LE2-S9**
		2.5	**8032628**	**NEBV-C1SW3-K-2.5-N-LE3-S9**
		5	**8032629**	**NEBV-C1SW3-K-5-N-LE3-S9**
Connecting cable, open end				Datasheets a Internet: neba
	For E-box code R8 3-pin, straight socket, M8x1	2.5	**8078223**	**NEBA-M8G3-U-2.5-N-LE3**
		5	**8078224**	**NEBA-M8G3-U-5-N-LE3**
	For E-box code R1 4-pin, straight socket, M8x1	2.5	**8078227**	**NEBA-M8G4-U-2.5-N-LE4**
		5	**8078228**	**NEBA-M8G4-U-5-N-LE4**
Connecting cable, open end				Datasheets a Internet: neba
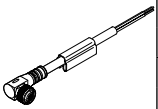	For E-box code R8 3-pin, angled socket, M8x1	2.5	**8078230**	**NEBA-M8W3-U-2.5-N-LE3**
		5	**8078231**	**NEBA-M8W3-U-5-N-LE3**
	For E-box code R1 4-pin, angled socket, M8x1	2.5	**8078233**	**NEBA-M8W4-U-2.5-N-LE4**
		5	**8078234**	**NEBA-M8W4-U-5-N-LE4**
Connecting cable				Datasheets a Internet: neba
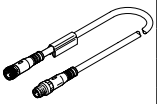	For E-box code R8, 3-pin, straight socket, M8x1	0.5	**8078282**	**NEBA-M8G3-U-0.5-N-M8G3**
		1	**8078283**	**NEBA-M8G3-U-1-N-M8G3**
		2.5	**8078286**	**NEBA-M8G3-U-2.5-N-M8G3**
		5	**8078287**	**NEBA-M8G3-U-5-N-M8G3**
		10	**8078288**	**NEBA-M8G3-U-10-N-M8G3**
	For E-box code R1, 4-pin, straight socket, M8x1	2.5	**8078295**	**NEBA-M8G4-U-2.5-N-M8G4**
Connecting cable, open end				Datasheets a Internet: neba
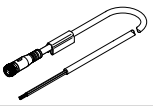	For pilot valve VSCS to ISO 15218, straight socket, M12x1, A-coded to EN 61076-2-101	2.5	**8078236**	**NEBA-M12G5-U-2.5-N-LE3**
		5	**8078237**	**NEBA-M12G5-U-5-N-LE3**
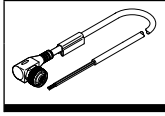	For pilot valve VSCS to ISO 15218, angled socket, M12x1, A-coded to EN 61076-2-101	2.5	**8078245**	**NEBA-M12W5-U-2.5-N-LE3**
		5	**8078246**	**NEBA-M12W5-U-5-N-LE3**

Accessories

Ordering data

	Description			Part no.	Type	PU[1]
Blanking plug						Datasheets a Internet: b
	For manifold rail and valve	Thread M5		**3843**	**B-M5**	**10**
		Thread M7		**174309**	**B-M7**	**10**
	For manifold rail	Thread G1/8		**3568**	**B-1/8**	**10**
		Thread G1/4		**3569**	**B-1/4**	**10**
		Thread G3/8		**3570**	**B-3/8**	**10**
	For valve	Thread G1/8		**578406**	**NPQH-BK-G18-P10**	**10**
		Thread G1/4		**578407**	**NPQH-BK-G14-P10**	**10**
Reducing nipple						
	Male thread M7	Female thread M5		**161359**	**D-M5I-M7A-ISK**	**10**
Fittings						Datasheets a Internet: qsm
	Thread M3	For tubing Ø 3 mm	Round releasing ring	**133001**	**QSM-M3-3-I-R**	**10**
		For tubing @ 4 mm	Round releasing ring	**133002**	**QSM-M3-4-I-R**	**10**
	Thread M5	For tubing Ø 3 mm	Round releasing ring	**133003**	**QSM-M5-3-I-R**	**10**
			Oval releasing ring	**153313**	**QSM-M5-3-I**	**10**
		For tubing @ 4 mm	Round releasing ring	**133004**	**QSM-M5-4-I-R**	**10**
			Oval releasing ring	**153315**	**QSM-M5-4-I**	**10**
		For tubing Ø 6 mm	Round releasing ring	**133005**	**QSM-M5-6-I-R**	**10**
			Oval releasing ring	**153317**	**QSM-M5-6-I**	**10**
	Thread M7	For tubing @ 4 mm	Oval releasing ring	**153319**	**QSM-M7-4-I**	**10**
		For tubing Ø 6 mm	Round releasing ring	**133007**	**QSM-M7-6-I-R**	**10**
			Oval releasing ring	**153321**	**QSM-M7-6-I**	**10**
	Thread G1/8	For tubing @ 4 mm	Oval releasing ring	**186106**	**QS-G1/8-4-I**	**10**
		For tubing Ø 6 mm	Oval releasing ring	**186107**	**QS-G1/8-6-I**	**10**
		For tubing Ø 8 mm	Oval releasing ring	**186109**	**QS-G1/8-8-I**	**10**
		For tubing Ø 10 mm	Oval releasing ring	**132999**	**QS-G1/8-10-I**	**10**
	Thread G1/4	For tubing Ø 6 mm	Oval releasing ring	**186108**	**QS-G1/4-6-I**	**10**
				130677	**QS-1/4-6-100**	**100**
		For tubing Ø 8 mm	Oval releasing ring	**186110**	**QS-G1/4-8-I**	**10**
				153016	**QS-1/4-8-I**	**10**
		For tubing Ø 10 mm	Oval releasing ring	**186112**	**QS-G1/4-10-I**	**10**
				153018	**QS-1/4-10-I**	**10**
	Thread 3/8	For tubing Ø 8 mm	Oval releasing ring	**130681**	**QS-3/8-8-50**	**50**
		For tubing Ø 10 mm	Oval releasing ring	**130682**	**QS-3/8-10-50**	**50**
		For tubing Ø 12 mm	Oval releasing ring	**130683**	**QS-3/8-12-20**	**20**
		For tubing Ø 16 mm	Oval releasing ring	**164957**	**QS-3/8-16**	**1**

1) Packaging unit.

Accessories

Ordering data	Description			Part no.	Type	PU[1]
Silencer						Datasheets a Internet: amte
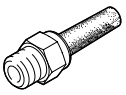	For thread M3			**1231120**	**AMTE-M-LH-M3**	**20**
	For thread M5			**1205858**	**AMTE-M-LH-M5**	**20**
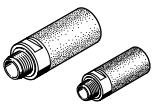	For thread M7			**161418**	**UC-M7**	**1**
	For thread G1/8	High flow rate		**2307**	**U-1/8**	**1**
		Lower flow rate		**161419**	**UC-1/8**	**1**
	For G1/4 thread	High flow rate		**2316**	**U-1/4**	**1**
		Lower flow rate		**165004**	**UC-1/4**	**1**
	For thread G3/8	High flow rate		**2309**	**U-3/8**	**1**
		Lower flow rate		**1707427**	**UC-3/8**	**1**
		Metal housing		**6843**	**U-3/8-B**	**1**
DIN rail						Datasheets a Internet: nrh
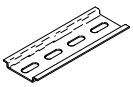	To EN 60715, 35 x 7.5 (WxH)	Length: 2 m		**35430**	**NRH-35-2000**	**1**
DIN rail mounting						Datasheets a Internet: vame
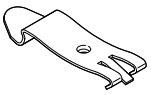	–			**569998**	**VAME-T-M4**	**2**
Cover cap for manual override						
	Concealed			**540898**	**VMPA-HBV-B**	**10**
	Non-detenting			**540897**	**VMPA-HBT-B**	**10**
	Detenting (without accessories)			**8002234**	**VAMC-L1-CD**	**10**
Identification holder						Datasheets nblätter a Internet: aslr
	Holder for an inscription label and covering for the retaining screw and manual override			**570818**	**ASLR-D-L1**	**10**
Mounting kit						Datasheets a Internet: davm
	With mounting bracket for lateral valve mounting	For standards-based cylinder DSBC-32...40	For VUVG-L14	**2568514**	**DAVM-MW-V1-32-V**	**1**
		For standards-based cylinder DSBC-50...125	For VUVG-L18	**2612128**	**DAVM-MW-V1-50-V**	**1**

1) Packaging unit.

Accessories

Ordering data						
	Description			Part no.	Type	PU[1]
Check valve						
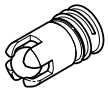	For manifold rails VABM-L1-10...	For blocking the flow in the event of back pressure in duct 3 and 5		**8047364**	**VABF-L1-10H-H2**	**10**
	For manifold rails VABM-L1-14...			**8047365**	**VABF-L1-14-H2**	**10**
Flow restrictor						
	For manifold rails VABM-L1-10...	For setting the flow rate during pressurisation and exhausting (for M5 threaded connection)	Nominal width: 0.5 mm	**8025709**	**VFFG-T-M5-5**	**10**
			Nominal width: 0.6 mm	**8025710**	**VFFG-T-M5-6**	**10**
			Nominal width: 0.7 mm	**8025711**	**VFFG-T-M5-7**	**10**
			Nominal width: 0.85 mm	**8025712**	**VFFG-T-M5-8**	**10**
			Nominal width: 1.05 mm	**8025713**	**VFFG-T-M5-10**	**10**
			Nominal width: 1.2 mm	**8025714**	**VFFG-T-M5-12**	**10**
			Nominal width: 1.55 mm	**8025715**	**VFFG-T-M5-15**	**10**
		For setting the flow rate for pressurisation and exhausting (for Ø 4 mm)	Nominal width: 0.5 mm	**8047346**	**VFFG-T-F4-5**	**10**
			Nominal width: 0.6 mm	**8047347**	**VFFG-T-F4-6**	**10**
			Nominal width: 0.7 mm	**8047348**	**VFFG-T-F4-7**	**10**
			Nominal width: 0.85 mm	**8047349**	**VFFG-T-F4-8**	**10**
			Nominal width: 1.05 mm	**8047350**	**VFFG-T-F4-10**	**10**
			Nominal width: 1.2 mm	**8047351**	**VFFG-T-F4-12**	**10**
			Nominal width: 1.55 mm	**8047352**	**VFFG-T-F4-15**	**10**
	For manifold rails VABM-L1-14...	For setting the flow rate for pressurisation and exhausting (for Ø 5.8 mm)	Nominal width: 0.7 mm	**8047353**	**VFFG-T-F6-7**	**10**
			Nominal width: 0.85 mm	**8047354**	**VFFG-T-F6-8**	**10**
			Nominal width: 1.05 mm	**8047355**	**VFFG-T-F6-10**	**10**
			Nominal width: 1.15 mm	**8047356**	**VFFG-T-F6-11**	**10**
			Nominal width: 1.4 mm	**8047357**	**VFFG-T-F6-14**	**10**
			Nominal width: 1.6 mm	**8047358**	**VFFG-T-F6-16**	**10**
			Nominal width: 1.8 mm	**8047359**	**VFFG-T-F6-18**	**10**
Flow restrictor set						
	For manifold rails VABM-L1-10...	Two of each size, for M5 threaded connection		**8025716**	**VFFG-T-M5-A-V1**	**14**
		Two of each size, for Ø 4 mm		**8062200**	**VFFG-T-F4-A-V1**	**14**
	For manifold rails VABM-L1-14...	Two of each size, for Ø 5.8 mm		**8062201**	**VFFG-T-F6-A-V1**	**14**

1) Packaging unit.