Push-in fitting, metal, standard NPQM

Characteristics

At a glance

- Solid-metal brass, chemically nickel-plated
- Cost-effective metal version for a wide range of applications
- Sturdy construction
- Operating medium: compressed air, vacuum

Additional documents

Link npqm

The additional document PUSH-IN-FITTINGS-ADD contains further information on tubing/fitting combinations and thread types, as well as installation instructions.

Design

[D]	Straight

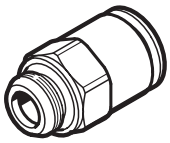

[H]	Bulkhead

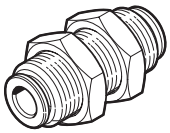

[L]	L-shape

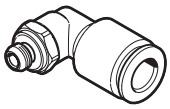

[T]	T-shape

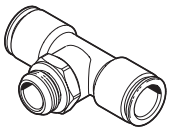

[Y]	Y-shape

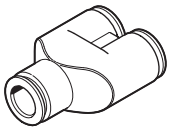

Generation

[G2]	2nd generation

RoHS conformity without the use of time-limited authorised exceptions.

Type code

001	Series	
NPQM	Push-in fitting	

002	Design	
D	Straight	
H	Bulkhead	
L	L-shape	
T	T-shape	
Y	Y-shape	

003	Additional characteristics	
	None	
F	2-way, F-outlet	

004	Mounting method	
	Standard	
H	Hollow bolt with external hex	
K	Internal hex	

005	Pneumatic connection 1	
G12	G1/2	
G14	G1/4	
G18	G1/8	
G38	G3/8	
M5	M5	
M7	M7	
Q4	Push-in connector 4 mm	
Q6	Push-in connector 6 mm	
Q8	Push-in connector 8 mm	
Q10	Push-in connector 10 mm	
Q12	Push-in connector 12 mm	
Q14	Push-in connector 14 mm	
S4	Push-in sleeve 4 mm	
S6	Push-in sleeve 6 mm	
S8	Push-in sleeve 8 mm	
S10	Push-in sleeve 10 mm	
S12	Push-in sleeve 12 mm	
S14	Push-in sleeve 14 mm	

006	Pneumatic connection 2	
E	Same size as connection 1	
Q3	Push-in connector 3 mm	
Q4	Push-in connector 4 mm	
Q6	Push-in connector 6 mm	
Q8	Push-in connector 8 mm	
Q10	Push-in connector 10 mm	
Q12	Push-in connector 12 mm	
Q14	Push-in connector 14 mm	
S4	Push-in sleeve 4 mm	
S6	Push-in sleeve 6 mm	
S8	Push-in sleeve 8 mm	
S10	Push-in sleeve 10 mm	
S12	Push-in sleeve 12 mm	
S14	Push-in sleeve 14 mm	

007	Packaging quantity [pieces]	
P10	10	

008	Generation	
	1st generation	

Datasheet

General technical data						
Design	L-shape	L-shape, 2-way, F outlet	Bulkhead	T-shape	Y-shape	Straight design
Size	Standard					
Design	Push-pull principle					
Type of seal on screwed plug	Sealing ring		–	Sealing ring	–	Sealing ring
Size of pack	10					

Operating and environmental conditions	
Operating pressure complete temperature range	-0.095 ... 1.6 MPa
Operating pressure complete temperature range	-0.95 ... 16 bar
Operating pressure complete temperature range	-13.775 ... 232 psi
Operating medium	Compressed air to ISO 8573-1:2010 [7:-:-]
Note on operating and pilot medium	Lubricated operation possible
Ambient temperature [1]	-20 ... 70°C
Corrosion resistance class CRC [2]	1 - Low corrosion stress

1) Note the range of application of the plastic tubing.
2) More information: www.festo.com/x/topic/crc

Materials	
Material housing	Brass, nickel-plated
Colour of release ring	Silver
Material nut [1]	Nickel-plated brass
Material hollow bolt [2]	Brass, nickel-plated
Material tubing seal	NBR
Note on materials	RoHS compliant
LABS (PWIS) conformity	VDMA24364-B1/B2-L

1) applies to NPQM-H
2) applies to NPQM-LK/LH/LFK

Dimensions

Dimensions – Push-in fitting NPQM-D, male thread with internal/external hex

Download CAD data www.festo.com

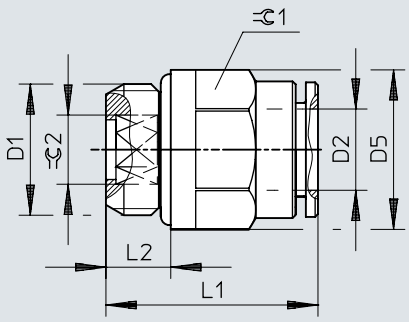

	D1	D2 ø	D5 ø	L1	L2	⬡ 1	⬡ 2
NPQM-D-G18-Q4-P10	G1/8	4	13,0	16,5	5,0	9	3
NPQM-D-G18-Q6-P10		6	13,5	19,5	5,0	12	4
NPQM-D-G18-Q8-P10		8	13,0	23,5	5,0	13	6
NPQM-D-G14-Q6-P10	G1/4	6	16,0	19,5	6,5	12	4
NPQM-D-G14-Q8-P10		8	16,0	21,5	6,5	14	6
NPQM-D-G14-Q10-P10		10	16,0	27,5	6,5	15	8
NPQM-D-G14-Q12-P10		12	16,0	28,5	6,5	19	8
NPQM-D-G38-Q8-P10	G3/8	8	20,0	21,0	7,0	14	6
NPQM-D-G38-Q10-P10		10	20,0	25,0	7,0	16	8
NPQM-D-G38-Q12-P10		12	20,0	28,5	7,0	19	10
NPQM-D-G38-Q14-P10		14	20,0	32,0	7,0	22	10
NPQM-D-G12-Q10-P10	G1/2	10	25,0	25,5	8,5	16	8
NPQM-D-G12-Q12-P10		12	25,0	26,5	8,5	19	10
NPQM-D-G12-Q14-P10		14	25,0	32,0	8,5	22	12

Dimensions

Dimensions – Push-in fitting NPQM-D, female thread with external hex

Download CAD data www.festo.com

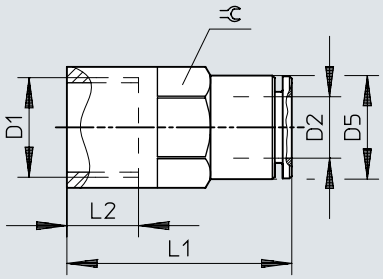

	D1	D2 ø	D5 ø	L1	L2	
NPQM-D-G18F-Q4-P10	G1/8	4	9,0	23,5	7,5	9
NPQM-D-G18F-Q6-P10		6	12,0	26,0	7,5	12
NPQM-D-G18F-Q8-P10		8	14,0	26,0	7,5	14
NPQM-D-G14F-Q6-P10	G1/4	6	12,0	30,0	11,0	12
NPQM-D-G14F-Q8-P10		8	14,0	30,0	11,0	14
NPQM-D-G14F-Q10-P10		10	16,0	32,0	11,0	16

Dimensions

Dimensions – Push-in fitting NPQM-DK, male thread with internal hex

Download CAD data www.festo.com

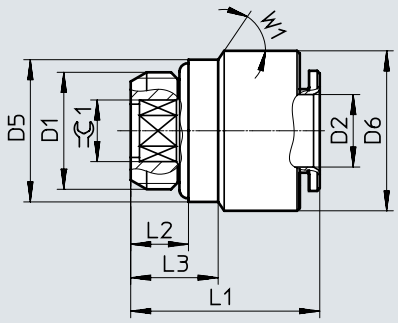

	D1	D2 ø	D5 ø	D6 ø	L1	L2	⬡
NPQM-DK-M5-Q4-P10	M5	4	8,0	9,0	19,0	4,0	2,5
NPQM-DK-M5-Q6-P10		6	8,0	12,0	22,0	4,0	2,5
NPQM-DK-M7-Q4-P10	M7	4	9,0	9,0	20,0	5,0	3,0
NPQM-DK-M7-Q6-P10		6	9,0	12,0	23,0	5,0	3,0

Dimensions

Dimensions – Push-in connector NPQM-D

Download CAD data www.festo.com

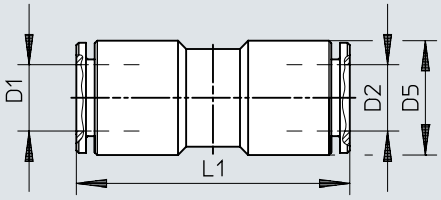

	D1 ø	D2 ø	D5 ø	L1
NPQM-D-Q4-E-P10	4	4	9,0	28,0
NPQM-D-Q6-E-P10	6	6	12,0	33,5
NPQM-D-Q8-E-P10	8	8	14,0	34,0
NPQM-D-Q10-E-P10	10	10	16,0	38,5
NPQM-D-Q12-E-P10	12	12	19,0	41,0
NPQM-D-Q14-E-P10	14	14	22,0	47,0

Dimensions

Dimensions – Push-in connector NPQM-D with push-in sleeve

Download CAD data www.festo.com

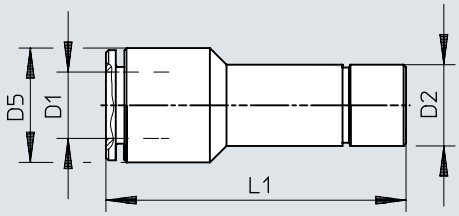

	D1 ø	D2 ø	D5 ø	L1
NPQM-D-Q4-S6-P10	4	6	9,0	33,5
NPQM-D-Q4-S8-P10		8	9,0	33,5
NPQM-D-Q6-S4-P10	6	4	12,0	35,5
NPQM-D-Q6-S8-P10		8	12,0	35,0
NPQM-D-Q6-S10-P10		10	12,0	36,5
NPQM-D-Q6-S12-P10		12	12,0	35,5
NPQM-D-Q6-S14-P10		14	14,0	37,5
NPQM-D-Q8-S6-P10	8	6	14,0	39,5
NPQM-D-Q8-S10-P10		10	14,0	37,0
NPQM-D-Q8-S12-P10		12	14,0	39,0
NPQM-D-Q8-S14-P10		14	14,0	38,5
NPQM-D-Q10-S12-P10	10	12	16,0	42,0
NPQM-D-Q10-S14-P10		14	16,0	42,0
NPQM-D-Q12-S14-P10	12	14	19	43,0

Dimensions

Dimensions – Push-in sleeve NPQM-D Download CAD data www.festo.com

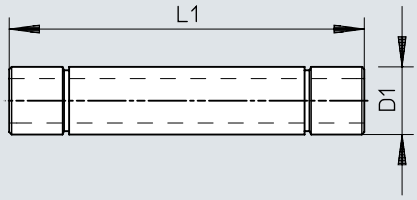

	D1 ø	L1
NPQM-D-S4-E-P10	4	35,0
NPQM-D-S6-E-P10	6	40,0
NPQM-D-S8-E-P10	8	42,0
NPQM-D-S10-E-P10	10	50,0
NPQM-D-S12-E-P10	12	53,0
NPQM-D-S14-E-P10	14	54,0

Dimensions

Dimensions – Push-in bulkhead connector NPQM-H

Download CAD data www.festo.com

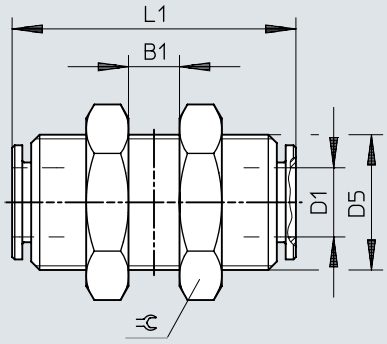

	D1 ø	D5	B1	L1	⬡
NPQM-H-Q4-E-P10	4	M12x1	11,0	28,0	16
NPQM-H-Q6-E-P10	6	M14x1	16,0	34,0	18
NPQM-H-Q8-E-P10	8	M16x1	17,0	34,0	20
NPQM-H-Q10-E-P10	10	M18x1	19,0	39,0	22
NPQM-H-Q12-E-P10	12	M20x1	20,0	41,0	24

Dimensions

Dimensions – Push-in L-fitting NPQM-L, male thread with external hex

Download CAD data www.festo.com

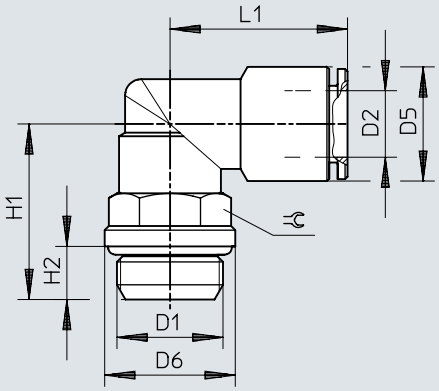

	D1	D2 ø	D5 ø	D6 ø	H1	H2	L1	⇌
NPQM-L-M5-Q4-P10	M5	4	9,0	8,0	14,0	4,0	17,5	9
NPQM-L-M5-Q6-P10		6	12,0	8,0	14,0	4,0	20,5	9
NPQM-L-G18-Q4-P10	G1/8	4	9,0	13,0	18,0	5,0	19,5	13
NPQM-L-G18-Q6-P10		6	12,0	13,0	18,0	5,0	22,0	13
NPQM-L-G18-Q8-P10		8	14,0	13,0	18,0	5,0	22,5	13
NPQM-L-G14-Q6-P10	G1/4	6	12,0	16,0	21,5	6,5	22,0	13
NPQM-L-G14-Q8-P10		8	14,0	16,0	21,5	6,5	22,5	13
NPQM-L-G14-Q10-P10		10	16,0	16,0	22,0	6,5	26,0	16
NPQM-L-G14-Q12-P10		12	19,0	16,0	25,5	6,5	28,5	20
NPQM-L-G38-Q8-P10	G3/8	8	14,0	20,0	25,5	7,0	23,0	16
NPQM-L-G38-Q10-P10		10	16,0	20,0	25,5	7,0	26,0	16
NPQM-L-G38-Q12-P10		12	19,0	20,0	26,0	7,0	28,5	20
NPQM-L-G38-Q14-P10		14	22,0	20,0	26,0	7,0	31,0	20
NPQM-L-G12-Q10-P10	G1/2	10	16,0	25,0	27,5	8,5	26,0	16
NPQM-L-G12-Q12-P10		12	19,0	25,0	30,5	8,5	28,5	20
NPQM-L-G12-Q14-P10		14	22,0	25,0	30,5	8,5	31,0	20

Dimensions

Dimensions – Push-in L-fitting NPQM-LK, male thread with internal hex

Download CAD data www.festo.com

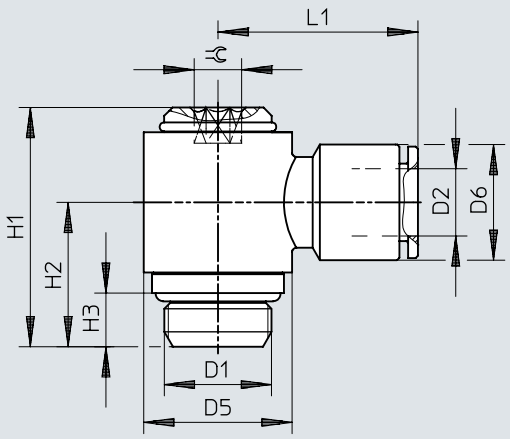

	D1	D2 ø	D5 ø	D6 ø	H1	H2	H3	L1	⬡
NPQM-LK-M5-Q3-P10	M5	3	7,0	6.8	15,0	9,5	4,0	14,1	2
NPQM-LK-M5-Q4-P10		4	10,0	9,0	19,0	11,0	4,0	18,5	3
NPQM-LK-G18-Q4-P10	G1/8	4	14,0	9,0	25,5	15,0	5,0	20,5	4
NPQM-LK-G18-Q6-P10		6	14,0	12,0	25,5	15,0	5,0	22,5	4
NPQM-LK-G18-Q8-P10		8	14,0	14,0	25,5	15,0	5,0	23,5	4
NPQM-LK-G14-Q6-P10	G1/4	6	18,0	12,0	29,0	17,5	6,5	24,0	5
NPQM-LK-G14-Q8-P10		8	18,0	14,0	29,0	17,5	6,5	24,5	5
NPQM-LK-G14-Q10-P10		10	18,0	16,0	29,0	17,5	6,5	27,0	5
NPQM-LK-G38-Q10-P10	G3/8	10	22,0	16,0	32,5	19,5	7,0	29,0	6

Dimensions

Dimensions – Push-in L-fitting NPQM-LK, connection M5

Download CAD data www.festo.com

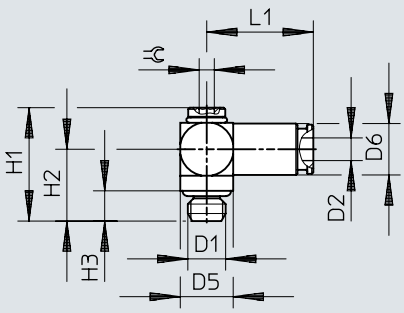

	D1	D2 ø	D5 ø	D6 ø	H1	H2	H3	L1	
NPQM-LK-M5-Q3-P10	M5x0,8	3	7	6,8	15	9,5	4	14,1	2

Dimensions

Dimensions – Push-in L-fitting NPQM-LH, male thread with external hex

Download CAD data www.festo.com

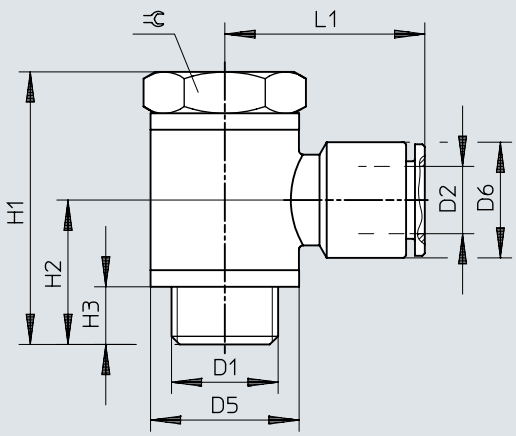

	D1	D2 ø	D5 ø	D6 ø	H1	H2	H3	L1	
NPQM-LH-M5-Q4-P10	M5	4	10,0	9,0	18,5	10,0	4,0	18,5	8
NPQM-LH-M5-Q6-P10		6	10,0	12,0	18,5	10,0	4,0	21,5	8
NPQM-LH-G18-Q4-P10	G1/8	4	14,0	9,0	27,0	14,0	5,0	20,5	14
NPQM-LH-G18-Q6-P10		6	14,0	12,0	27,0	14,0	5,0	22,5	14
NPQM-LH-G18-Q8-P10		8	14,0	14,0	27,0	14,0	5,0	23,5	14
NPQM-LH-G14-Q6-P10	G1/4	6	18,0	12,0	31,5	16,5	6,5	24,0	17
NPQM-LH-G14-Q8-P10		8	18,0	14,0	31,5	16,5	6,5	24,5	17
NPQM-LH-G38-Q8-P10	G3/8	8	22,0	14,0	36,0	18,5	7,0	26,5	20
NPQM-LH-G38-Q10-P10		10	22,0	16,0	36,0	18,5	7,0	29,0	20
NPQM-LH-G38-Q12-P10		12	22,0	19,0	36,0	18,5	7,0	29,5	20

Dimensions

Dimensions – Multiple distributor NPQM-LFK, male thread with internal hex

Download CAD data www.festo.com

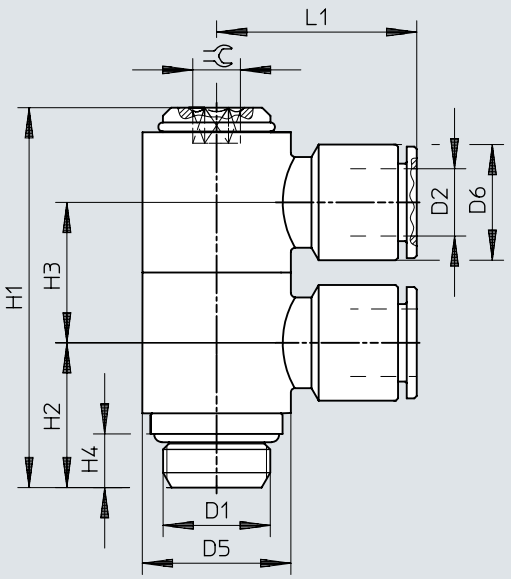

	D1	D2 ø	D5 ø	D6 ø	H1	H2	H3	H4	L1	⬡
NPQM-LFK-G18-Q4-P10	G1/8	4	14,0	9,0	40,5	15,0	15,0	5,0	20,5	4
NPQM-LFK-G18-Q6-P10		6	14,0	12,0	40,5	15,0	15,0	5,0	22,5	4
NPQM-LFK-G18-Q8-P10		8	14,0	14,0	40,5	15,0	15,0	5,0	23,5	4
NPQM-LFK-G14-Q6-P10	G1/4	6	18,0	12,0	46,0	17,5	17,0	6,5	24,0	5
NPQM-LFK-G14-Q8-P10		8	18,0	14,0	46,0	17,5	17,0	6,5	24,5	5

Dimensions

Dimensions – Push-in L-connector NPQM-L

Download CAD data www.festo.com

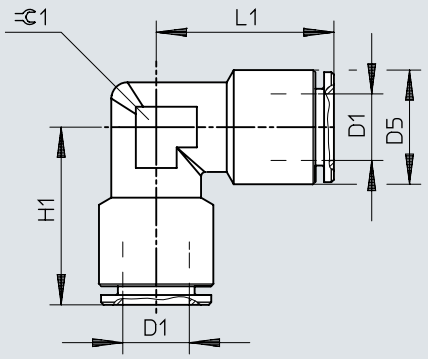

	D1 ø	D5 ø	H1	L1	⌲ 1
NPQM-L-Q4-E-P10	4	9,0	17,5	17,5	8
NPQM-L-Q6-E-P10	6	12,0	20,5	20,5	10
NPQM-L-Q8-E-P10	8	14,0	22,5	22,5	12
NPQM-L-Q10-E-P10	10	16,0	25,0	25,0	14
NPQM-L-Q12-E-P10	12	19,0	26,5	26,5	18
NPQM-L-Q14-E-P10	14	22,0	31,5	31,5	18

Dimensions

Dimensions – Push-in L-connector NPQM-L with push-in sleeve

Download CAD data www.festo.com

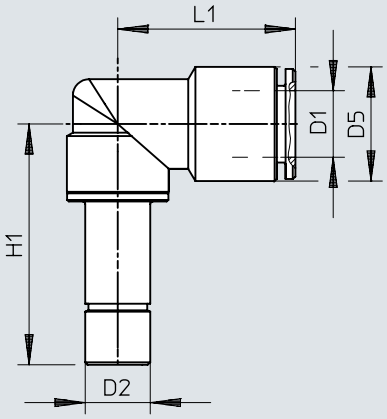

	D1 ø	D2 ø	D5 ø	H1	L1
NPQM-L-Q4-S4-P10	4	4	9,0	25,5	19,5
NPQM-L-Q6-S6-P10	6	6	12,0	29,5	22,0
NPQM-L-Q8-S8-P10	8	8	14,0	29,5	22,5
NPQM-L-Q10-S10-P10	10	10	16,0	33,5	26,0

Dimensions

Dimensions – Push-in T-fitting NPQM-T, male thread with external hex

Download CAD data www.festo.com

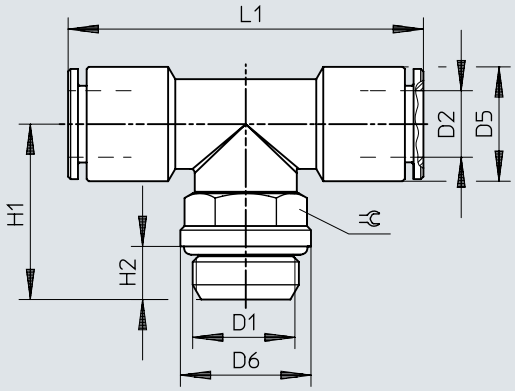

	D1	D2 Ø	D5 Ø	D6 Ø	H1	H2	L1	⬡
NPQM-T-G18-Q4-P10	G1/8	4	9,0	13,0	18,0	5,0	39,0	13,0
NPQM-T-G18-Q6-P10		6	12,0	13,0	18,0	5,0	44,0	13,0
NPQM-T-G18-Q8-P10		8	14,0	13,0	18,0	5,0	45,0	13,0
NPQM-T-G14-Q6-P10	G1/4	6	12,0	16,0	21,5	6,5	44,0	13,0
NPQM-T-G14-Q8-P10		8	14,0	16,0	21,5	6,5	45,0	13,0
NPQM-T-G14-Q10-P10		10	16,0	16,0	22,0	6,5	52,0	16,0
NPQM-T-G38-Q8-P10	G3/8	8	14,0	20,0	25,5	7,0	46,0	16,0
NPQM-T-G38-Q10-P10		10	16,0	20,0	25,5	7,0	52,0	16,0
NPQM-T-G38-Q12-P10		12	19,0	20,0	26,0	7,0	57,0	20,0
NPQM-T-G12-Q12-P10	G1/2	12	19,0	25,0	30,5	8,5	57,0	20,0

Dimensions

Dimensions – Push-in T-connector NPQM-T

Download CAD data www.festo.com

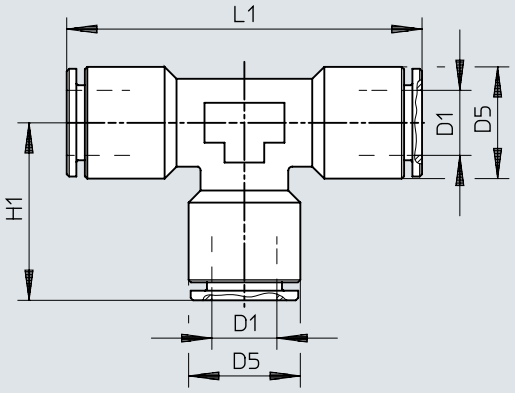

	D1 Ø	D5 Ø	H1	L1
NPQM-T-Q4-E-P10	4	9,0	17,5	35,0
NPQM-T-Q6-E-P10	6	12,0	20,0	40,0
NPQM-T-Q8-E-P10	8	14,0	21,0	42,0
NPQM-T-Q10-E-P10	10	16,0	24,5	49,0
NPQM-T-Q12-E-P10	12	19,0	26,0	52,0
NPQM-T-Q14-E-P10	14	22,0	30,5	61,0

Dimensions

Dimensions – Push in T-connector NPQM-T with push-in sleeve

Download CAD data www.festo.com

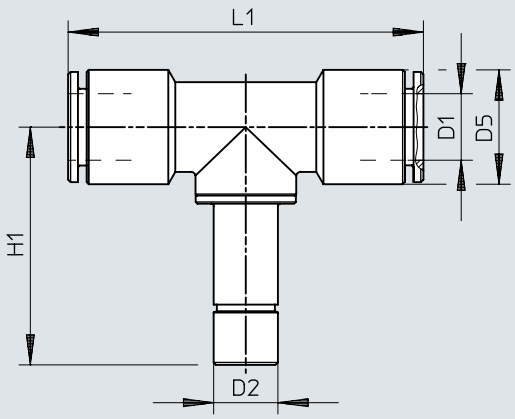

	D1 ø	D2 ø	D5 ø	H1	L1
NPQM-T-Q4-S4-P10	4	4	9,0	25,5	39,0
NPQM-T-Q6-S6-P10	6	6	12,0	29,5	44,0
NPQM-T-Q8-S8-P10	8	8	14,0	29,5	45,0
NPQM-T-Q10-S10-P10	10	10	16,0	33,5	52,0

Dimensions

Dimensions – Push-in Y-connector NPQM-Y

Download CAD data www.festo.com

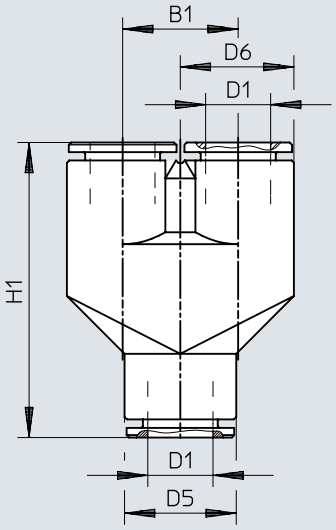

	D1	D5 Ø	D6 Ø	B1	H1
NPQM-Y-Q4-E-P10	4	9,0	9,25	9,5	29,5
NPQM-Y-Q6-E-P10	6	12,0	12,25	12,5	36,0
NPQM-Y-Q8-E-P10	8	14,0	14,25	14,5	37,5
NPQM-Y-Q10-E-P10	10	16,0	16,25	16,5	44,5
NPQM-Y-Q12-E-P10	12	19,0	19,25	19,5	49,0

Dimensions

Dimensions – Push-in Y-connector NPQM-Y, reducing

Download CAD data www.festo.com

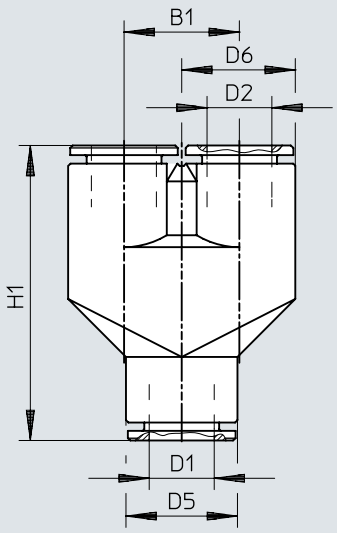

	D1 ø	D2‘ ø	D5 ø	D6 ø	B1	H1
NPQM-Y-Q6-Q4-P10	6	4	12,0	12,25	12,5	36,0
NPQM-Y-Q8-Q6-P10	8	6	14,0	14,25	14,5	38,5
NPQM-Y-Q10-Q8-P10	10	8	16,0	16,25	16,5	44,0

Ordering data

Push-in fitting NPQM-D, male thread with internal/external hex

	Pneumatic connection, port 1	Pneumatic connection, port 2	Nominal torque [1]	Product weight	Part no.	Type
	Male thread G1/8	For tubing outside diameter of 4 mm	6 Nm	6.1 g	**558661**	**NPQM-D-G18-Q4-P10**
		For tubing outside diameter of 6 mm		9 g	**558662**	**NPQM-D-G18-Q6-P10**
		For tubing outside diameter of 8 mm		11.4 g	**558663**	**NPQM-D-G18-Q8-P10**
	Male thread G1/4	For tubing outside diameter of 6 mm	7.5 Nm	12.7 g	**558664**	**NPQM-D-G14-Q6-P10**
		For tubing outside diameter of 8 mm		13.6 g	**558665**	**NPQM-D-G14-Q8-P10**
		For tubing outside diameter of 10 mm		17.4 g	**558666**	**NPQM-D-G14-Q10-P10**
		For tubing outer diameter of 12 mm		26.2 g	**558667**	**NPQM-D-G14-Q12-P10**
	Male thread G3/8	For tubing outside diameter of 8 mm	9 Nm	20.1 g	**558668**	**NPQM-D-G38-Q8-P10**
		For tubing outside diameter of 10 mm		22.6 g	**558669**	**NPQM-D-G38-Q10-P10**
		For tubing outer diameter of 12 mm		28.9 g	**558670**	**NPQM-D-G38-Q12-P10**
	Male thread G1/2	For tubing outside diameter of 10 mm		34.5 g	**558671**	**NPQM-D-G12-Q10-P10**
		For tubing outer diameter of 12 mm		36.1 g	**558672**	**NPQM-D-G12-Q12-P10**
		For tubing outside diameter of 14 mm		42.4 g	**570451**	**NPQM-D-G12-Q14-P10**

1) Tolerance for nominal tightening torque: ±20%

Push-in fitting NPQM-D, female thread with external hex

	Pneumatic connection, port 1	Pneumatic connection, port 2	Product weight	Part no.	Type
	Female thread G1/8	For tubing outside diameter of 4 mm	10 g	**558674**	**NPQM-D-G18F-Q4-P10**
		For tubing outside diameter of 6 mm	15.1 g	**558675**	**NPQM-D-G18F-Q6-P10**
		For tubing outside diameter of 8 mm	17.5 g	**558676**	**NPQM-D-G18F-Q8-P10**
	Female thread G1/4	For tubing outside diameter of 6 mm	18.5 g	**558678**	**NPQM-D-G14F-Q6-P10**
		For tubing outside diameter of 8 mm	20.2 g	**558679**	**NPQM-D-G14F-Q8-P10**
		For tubing outside diameter of 10 mm	24.4 g	**558680**	**NPQM-D-G14F-Q10-P10**

Ordering data

Push-in fitting NPQM-DK, male thread with internal hex

	Pneumatic connection, port 1	Pneumatic connection, port 2	Nominal torque [1]	Product weight	Part no.	Type
	Male thread M5	For tubing outside diameter of 4 mm	1 Nm	4.6 g	**558657**	**NPQM-DK-M5-Q4-P10**
		For tubing outside diameter of 6 mm		8.6 g	**558658**	**NPQM-DK-M5-Q6-P10**
	Male thread M7	For tubing outside diameter of 4 mm	3 Nm	5 g	**558659**	**NPQM-DK-M7-Q4-P10**
		For tubing outside diameter of 6 mm		9.5 g	**558660**	**NPQM-DK-M7-Q6-P10**

1) Tolerance for nominal tightening torque: ±20%

Push-in fitting NPQM-D

	Pneumatic connection, port 1	Pneumatic connection, port 2	Product weight	Part no.	Type
	For tubing outer diameter of 4 mm	For tubing outside diameter of 4 mm	6.8 g	**558760**	**NPQM-D-Q4-E-P10**
	For tubing outside diameter of 6 mm	For tubing outside diameter of 6 mm	15 g	**558761**	**NPQM-D-Q6-E-P10**
	For tubing outer diameter of 8 mm	For tubing outside diameter of 8 mm	18 g	**558762**	**NPQM-D-Q8-E-P10**
	For tubing outer diameter of 10 mm	For tubing outside diameter of 10 mm	22.5 g	**558763**	**NPQM-D-Q10-E-P10**
	For tubing outer diameter of 12 mm	For tubing outer diameter of 12 mm	36.6 g	**558764**	**NPQM-D-Q12-E-P10**
	For tubing outer diameter of 14 mm	For tubing outside diameter of 14 mm	47.4 g	**570452**	**NPQM-D-Q14-E-P10**

Push-in connector NPQM-D with push-in sleeve

	Pneumatic connection, port 1 [1]	Pneumatic connection, port 2	Product weight	Part no.	Type
	Push-in sleeve Ø 4 mm	For tubing outside diameter of 6 mm	10 g	**558767**	**NPQM-D-Q6-S4-P10**
	Push-in sleeve Ø 6 mm	For tubing outside diameter of 4 mm	7 g	**558765**	**NPQM-D-Q4-S6-P10**
		For tubing outside diameter of 8 mm	13.5 g	**558771**	**NPQM-D-Q8-S6-P10**
	Push-in sleeve Ø 8 mm	For tubing outside diameter of 4 mm	10 g	**558766**	**NPQM-D-Q4-S8-P10**
		For tubing outside diameter of 6 mm	11.5 g	**558768**	**NPQM-D-Q6-S8-P10**
	Push-in sleeve Ø 10 mm		15.5 g	**558769**	**NPQM-D-Q6-S10-P10**
		For tubing outside diameter of 8 mm	15 g	**558772**	**NPQM-D-Q8-S10-P10**
	Push-in sleeve Ø 12 mm	For tubing outside diameter of 6 mm	22.2 g	**558770**	**NPQM-D-Q6-S12-P10**
		For tubing outside diameter of 8 mm	23 g	**558773**	**NPQM-D-Q8-S12-P10**
		For tubing outside diameter of 10 mm	20 g	**558774**	**NPQM-D-Q10-S12-P10**
	Push-in sleeve Ø 14 mm	For tubing outside diameter of 6 mm	25 g	**570457**	**NPQM-D-Q6-S14-P10**

Ordering data

Push-in connector NPQM-D with push-in sleeve

	Pneumatic connection, port 1 [1]	Pneumatic connection, port 2	Product weight	Part no.	Type
	Push-in sleeve Ø 14 mm	For tubing outside diameter of 8 mm	31.5 g	**570458**	**NPQM-D-Q8-S14-P10**
		For tubing outside diameter of 10 mm	29.5 g	**570456**	**NPQM-D-Q10-S14-P10**
		For tubing outer diameter of 12 mm	24 g	**570459**	**NPQM-D-Q12-S14-P10**

1) When using NPQM push-in sleeves, products from the same family must be used to guarantee an optimum and secure connection. For example, this means that an NPQM push-in sleeve should only be used with an NPQM plug connector or an NPQM push-in fitting. Compatibility with the RoHS II-compliant series NPQM-...-G2 does not apply either.

Push-in sleeve NPQM-D

	Pneumatic connection, port 1 [1]	Pneumatic connection, port 2	Product weight	Part no.	Type
	Push-in sleeve QS-8	Push-in sleeve QS-8	7.5 g	**558813**	**NPQM-D-S8-E-P10**
	Push-in sleeve QS-10	Push-in sleeve QS-10	11 g	**558814**	**NPQM-D-S10-E-P10**
	Push-in sleeve QS-12	Push-in sleeve QS-12	14 g	**558815**	**NPQM-D-S12-E-P10**
	Push-in sleeve Ø 4 mm	Push-in sleeve QS-4	2.8 g	**558811**	**NPQM-D-S4-E-P10**
	Push-in sleeve Ø 6 mm	Push-in sleeve QS-6	5.5 g	**558812**	**NPQM-D-S6-E-P10**
	Push-in sleeve Ø 14 mm	Push-in sleeve QS-14	18.5 g	**570455**	**NPQM-D-S14-E-P10**

1) When using NPQM push-in sleeves, products from the same family must be used to guarantee an optimum and secure connection. For example, this means that an NPQM push-in sleeve should only be used with an NPQM plug connector or an NPQM push-in fitting. Compatibility with the RoHS II-compliant series NPQM-...-G2 does not apply either.

Push-in bulkhead connector NPQM-H

	Pneumatic connection, port 1	Pneumatic connection, port 2	Product weight	Part no.	Type
	For tubing outer diameter of 4 mm	For tubing outside diameter of 4 mm	23.5 g	**558806**	**NPQM-H-Q4-E-P10**
	For tubing outside diameter of 6 mm	For tubing outside diameter of 6 mm	33 g	**558807**	**NPQM-H-Q6-E-P10**
	For tubing outer diameter of 8 mm	For tubing outside diameter of 8 mm	39.5 g	**558808**	**NPQM-H-Q8-E-P10**
	For tubing outer diameter of 10 mm	For tubing outside diameter of 10 mm	51.5 g	**558809**	**NPQM-H-Q10-E-P10**
	For tubing outer diameter of 12 mm	For tubing outer diameter of 12 mm	60 g	**558810**	**NPQM-H-Q12-E-P10**

Push-in L-fitting NPQM-L, male thread with external hex

	Pneumatic connection, port 1 [1]	Pneumatic connection, port 2	Nominal torque [2]	Product weight	Part no.	Type
	Male thread M5	For tubing outside diameter of 4 mm	1 Nm	8.8 g	**558704**	**NPQM-L-M5-Q4-P10**
		For tubing outside diameter of 6 mm		11.9 g	**558705**	**NPQM-L-M5-Q6-P10**
	Male thread G1/8	For tubing outside diameter of 4 mm	6 Nm	15.7 g	**558708**	**NPQM-L-G18-Q4-P10**
		For tubing outside diameter of 6 mm		18.5 g	**558709**	**NPQM-L-G18-Q6-P10**
		For tubing outside diameter of 8 mm		22 g	**558710**	**NPQM-L-G18-Q8-P10**
	Male thread G1/4	For tubing outside diameter of 6 mm	7.5 Nm	21.8 g	**558711**	**NPQM-L-G14-Q6-P10**

Ordering data

Push-in L-fitting NPQM-L, male thread with external hex

	Pneumatic connection, port 1	Pneumatic connection, port 2	Nominal torque [1]	Product weight	Part no.	Type
	Male thread G1/4	For tubing outside diameter of 8 mm	7.5 Nm	25.3 g	**558712**	**NPQM-L-G14-Q8-P10**
		For tubing outside diameter of 10 mm		34 g	**558713**	**NPQM-L-G14-Q10-P10**
		For tubing outer diameter of 12 mm		58.5 g	**558714**	**NPQM-L-G14-Q12-P10**
	Male thread G3/8	For tubing outside diameter of 8 mm	9 Nm	37.7 g	**558715**	**NPQM-L-G38-Q8-P10**
		For tubing outside diameter of 10 mm		39.2 g	**558716**	**NPQM-L-G38-Q10-P10**
		For tubing outer diameter of 12 mm		56.1 g	**558717**	**NPQM-L-G38-Q12-P10**
		For tubing outside diameter of 14 mm		61.6 g	**570460**	**NPQM-L-G38-Q14-P10**
	Male thread G1/2	For tubing outside diameter of 10 mm		43.2 g	**558718**	**NPQM-L-G12-Q10-P10**
		For tubing outer diameter of 12 mm		65.1 g	**558719**	**NPQM-L-G12-Q12-P10**
		For tubing outside diameter of 14 mm		69.9 g	**570461**	**NPQM-L-G12-Q14-P10**

1) Tolerance for nominal tightening torque: ±20%

Push-in L-fitting NPQM-LK, male thread with internal hex

	Pneumatic connection, port 1	Pneumatic connection, port 2	Nominal torque [1]	Product weight	Part no.	Type
	Male thread M5	For tubing outer diameter of 3 mm	1 Nm	8.1 g	**558816**	**NPQM-LK-M5-Q3-P10**
		For tubing outside diameter of 4 mm		10.1 g	**558817**	**NPQM-LK-M5-Q4-P10**
	Male thread G1/8		6 Nm	22.2 g	**558818**	**NPQM-LK-G18-Q4-P10**
		For tubing outside diameter of 6 mm		24.4 g	**558819**	**NPQM-LK-G18-Q6-P10**
		For tubing outside diameter of 8 mm		25.7 g	**558820**	**NPQM-LK-G18-Q8-P10**
	Male thread G1/4	For tubing outside diameter of 6 mm	7.5 Nm	39.3 g	**558821**	**NPQM-LK-G14-Q6-P10**
		For tubing outside diameter of 8 mm		39.1 g	**558822**	**NPQM-LK-G14-Q8-P10**

Ordering data

Push-in L-fitting NPQM-LK, male thread with internal hex

	Pneumatic connection, port 1	Pneumatic connection, port 2	Nominal torque [1]	Product weight	Part no.	Type
	Male thread G1/4	For tubing outside diameter of 10 mm	7.5 Nm	43.6 g	**558823**	**NPQM-LK-G14-Q10-P10**
	Male thread G3/8		9 Nm	62.2 g	**558825**	**NPQM-LK-G38-Q10-P10**

1) Tolerance for nominal tightening torque: ±20%

Push-in L-fitting NPQM-LH, male thread with external hex

	Pneumatic connection, port 1	Pneumatic connection, port 2	Nominal torque [1]	Product weight	Part no.	Type
	Male thread M5	For tubing outside diameter of 4 mm	1 Nm	10.3 g	**558827**	**NPQM-LH-M5-Q4-P10**
		For tubing outside diameter of 6 mm		13.6 g	**558828**	**NPQM-LH-M5-Q6-P10**
	Male thread G1/8	For tubing outside diameter of 4 mm	6 Nm	27.1 g	**558829**	**NPQM-LH-G18-Q4-P10**
		For tubing outside diameter of 6 mm		29.5 g	**558830**	**NPQM-LH-G18-Q6-P10**
		For tubing outside diameter of 8 mm		30.5 g	**558831**	**NPQM-LH-G18-Q8-P10**
	Male thread G1/4	For tubing outside diameter of 6 mm	7.5 Nm	49.1 g	**558832**	**NPQM-LH-G14-Q6-P10**
		For tubing outside diameter of 8 mm		49.3 g	**558833**	**NPQM-LH-G14-Q8-P10**
	Male thread G3/8		9 Nm	76.7 g	**558834**	**NPQM-LH-G38-Q8-P10**
		For tubing outside diameter of 10 mm		77.9 g	**558835**	**NPQM-LH-G38-Q10-P10**
		For tubing outer diameter of 12 mm		82.7 g	**558836**	**NPQM-LH-G38-Q12-P10**

1) Tolerance for nominal tightening torque: ±20%

Multiple distributor NPQM-LFK, male thread with internal hex (L-shape, dual, F-outlet)

	Pneumatic connection, port 1	Pneumatic connection, port 2	Nominal torque [1]	Product weight	Part no.	Type
	Male thread G1/8	For tubing outside diameter of 4 mm	6 Nm	40 g	**558837**	**NPQM-LFK-G18-Q4-P10**

Ordering data

Multiple distributor NPQM-LFK, male thread with internal hex (L-shape, dual, F-outlet)

	Pneumatic connection, port 1	Pneumatic connection, port 2	Nominal torque [1]	Product weight	Part no.	Type
	Male thread G1/8	For tubing outside diameter of 6 mm	6 Nm	46 g	**558838**	**NPQM-LFK-G18-Q6-P10**
		For tubing outside diameter of 8 mm		50 g	**558839**	**NPQM-LFK-G18-Q8-P10**
	Male thread G1/4	For tubing outside diameter of 6 mm	7.5 Nm	69.5 g	**558840**	**NPQM-LFK-G14-Q6-P10**
		For tubing outside diameter of 8 mm			**558841**	**NPQM-LFK-G14-Q8-P10**

1) Tolerance for nominal tightening torque: ±20%

Push-in L-connector NPQM-L

	Pneumatic connection, port 1	Pneumatic connection, port 2	Product weight	Part no.	Type
	For tubing outer diameter of 4 mm	For tubing outside diameter of 4 mm	9 g	**558776**	**NPQM-L-Q4-E-P10**
	For tubing outside diameter of 6 mm	For tubing outside diameter of 6 mm	16.5 g	**558777**	**NPQM-L-Q6-E-P10**
	For tubing outer diameter of 8 mm	For tubing outside diameter of 8 mm	22 g	**558778**	**NPQM-L-Q8-E-P10**
	For tubing outer diameter of 10 mm	For tubing outside diameter of 10 mm	29.5 g	**558779**	**NPQM-L-Q10-E-P10**
	For tubing outer diameter of 12 mm	For tubing outer diameter of 12 mm	48.5 g	**558780**	**NPQM-L-Q12-E-P10**
	For tubing outer diameter of 14 mm	For tubing outside diameter of 14 mm	58 g	**570453**	**NPQM-L-Q14-E-P10**

Push-in L-connector NPQM-L with push-in sleeve

	Pneumatic connection, port 1 [1]	Pneumatic connection, port 2	Product weight	Part no.	Type
	Push-in sleeve Ø 4 mm	For tubing outside diameter of 4 mm	14 g	**558781**	**NPQM-L-Q4-S4-P10**
	Push-in sleeve Ø 6 mm	For tubing outside diameter of 6 mm	17 g	**558782**	**NPQM-L-Q6-S6-P10**
	Push-in sleeve Ø 8 mm	For tubing outside diameter of 8 mm	20.5 g	**558783**	**NPQM-L-Q8-S8-P10**
	Push-in sleeve Ø 10 mm	For tubing outside diameter of 10 mm	30 g	**558784**	**NPQM-L-Q10-S10-P10**

1) When using NPQM push-in sleeves, products from the same family must be used to guarantee an optimum and secure connection. For example, this means that an NPQM push-in sleeve should only be used with an NPQM plug connector or an NPQM push-in fitting. Compatibility with the RoHS II-compliant series NPQM-...-G2 does not apply either.

Push-in T-fitting NPQM-T, male thread with external hex

	Pneumatic connection, port 1	Pneumatic connection, port 2	Nominal torque [1]	Product weight	Part no.	Type
	Male thread G1/8	For tubing outside diameter of 4 mm	6 Nm	20.2 g	**558736**	**NPQM-T-G18-Q4-P10**

Ordering data

Push-in T-fitting NPQM-T, male thread with external hex

	Pneumatic connection, port 1	Pneumatic connection, port 2	Nominal torque [1]	Product weight	Part no.	Type
	Male thread G1/8	For tubing outside diameter of 6 mm	6 Nm	25.2 g	**558737**	**NPQM-T-G18-Q6-P10**
		For tubing outside diameter of 8 mm		30.7 g	**558738**	**NPQM-T-G18-Q8-P10**
	Male thread G1/4	For tubing outside diameter of 6 mm	7.5 Nm	29.1 g	**558739**	**NPQM-T-G14-Q6-P10**
		For tubing outside diameter of 8 mm		33.6 g	**558740**	**NPQM-T-G14-Q8-P10**
		For tubing outside diameter of 10 mm		44.4 g	**558741**	**NPQM-T-G14-Q10-P10**
	Male thread G3/8	For tubing outside diameter of 8 mm	9 Nm	46.4 g	**558743**	**NPQM-T-G38-Q8-P10**
		For tubing outside diameter of 10 mm		49.7 g	**558744**	**NPQM-T-G38-Q10-P10**
		For tubing outer diameter of 12 mm		75.3 g	**558745**	**NPQM-T-G38-Q12-P10**
	Male thread G1/2			82 g	**558747**	**NPQM-T-G12-Q12-P10**

1) Tolerance for nominal tightening torque: ±20%

Push-in T-connector NPQM-T

	Pneumatic connection, port 1	Pneumatic connection, port 2	Product weight	Part no.	Type
	For tubing outer diameter of 4 mm	For tubing outside diameter of 4 mm	12.5 g	**558786**	**NPQM-T-Q4-E-P10**
	For tubing outside diameter of 6 mm	For tubing outside diameter of 6 mm	22.5 g	**558787**	**NPQM-T-Q6-E-P10**
	For tubing outer diameter of 8 mm	For tubing outside diameter of 8 mm	28.4 g	**558788**	**NPQM-T-Q8-E-P10**
	For tubing outer diameter of 10 mm	For tubing outside diameter of 10 mm	39.2 g	**558789**	**NPQM-T-Q10-E-P10**
	For tubing outer diameter of 12 mm	For tubing outer diameter of 12 mm	61.3 g	**558790**	**NPQM-T-Q12-E-P10**
	For tubing outer diameter of 14 mm	For tubing outside diameter of 14 mm	77.1 g	**570454**	**NPQM-T-Q14-E-P10**

Push-in T-connector NPQM-T with push-in sleeve

	Pneumatic connection, port 1 [1]	Pneumatic connection, port 2	Product weight	Part no.	Type
	Push-in sleeve Ø 4 mm	For tubing outside diameter of 4 mm	18.5 g	**558791**	**NPQM-T-Q4-S4-P10**

Ordering data

Push-in T-connector NPQM-T with push-in sleeve

	Pneumatic connection, port 1 [1]	Pneumatic connection, port 2	Product weight	Part no.	Type
	Push-in sleeve Ø 6 mm	For tubing outside diameter of 6 mm	24.5 g	**558792**	**NPQM-T-Q6-S6-P10**
	Push-in sleeve Ø 8 mm	For tubing outside diameter of 8 mm	29 g	**558793**	**NPQM-T-Q8-S8-P10**
	Push-in sleeve Ø 10 mm	For tubing outside diameter of 10 mm	41 g	**558794**	**NPQM-T-Q10-S10-P10**

1) When using NPQM push-in sleeves, products from the same family must be used to guarantee an optimum and secure connection. For example, this means that an NPQM push-in sleeve should only be used with an NPQM plug connector or an NPQM push-in fitting. Compatibility with the RoHS II-compliant series NPQM-...-G2 does not apply either.

Push-in Y-connector NPQM-Y

	Pneumatic connection, port 1	Pneumatic connection, port 2	Product weight	Part no.	Type
	For tubing outer diameter of 4 mm	For tubing outside diameter of 4 mm	13.5 g	**558798**	**NPQM-Y-Q4-E-P10**
	For tubing outside diameter of 6 mm	For tubing outside diameter of 6 mm	32 g	**558799**	**NPQM-Y-Q6-E-P10**
	For tubing outer diameter of 8 mm	For tubing outside diameter of 8 mm	42.5 g	**558800**	**NPQM-Y-Q8-E-P10**
	For tubing outer diameter of 10 mm	For tubing outside diameter of 10 mm	62.7 g	**558801**	**NPQM-Y-Q10-E-P10**
	For tubing outer diameter of 12 mm	For tubing outer diameter of 12 mm	95.8 g	**558802**	**NPQM-Y-Q12-E-P10**

Push-in Y-connector NPQM-Y, reducing

	Pneumatic connection, port 1	Pneumatic connection, port 2	Product weight	Part no.	Type
	For tubing outside diameter of 6 mm	For tubing outside diameter of 4 mm	35.9 g	**558803**	**NPQM-Y-Q6-Q4-P10**
	For tubing outer diameter of 8 mm	For tubing outside diameter of 6 mm	52.6 g	**558804**	**NPQM-Y-Q8-Q6-P10**
	For tubing outer diameter of 10 mm	For tubing outside diameter of 8 mm	78.1 g	**558805**	**NPQM-Y-Q10-Q8-P10**