Rotary indexing tables DHTG

FESTO



New

Rotary indexing tables DHTG

Key features

At a glance

- Robust mechanics
- Simple planning and commissioning
- Number of stations: 2, 3, 4, 6, 8, 12, 24
- Smooth motion sequence, almost sinusoidal acceleration behaviour
- Control options:
  - Anti-clockwise
  - Clockwise
  - Reciprocating motion
- Integrated functions:
  - Overload protection
  - Sensor function
  - Cushioning adjustment
  - Speed setting
  - Changing the direction of rotation

The technology in detail

1 Through-hole for energy throughfeed
2 Thread for position sensing
3 One-way flow control valve for regulating speed
4 Supply port for reciprocating operation
5 Supply port for clockwise or anti-clockwise rotation
6 Adjusting screw for cushioning adjustment

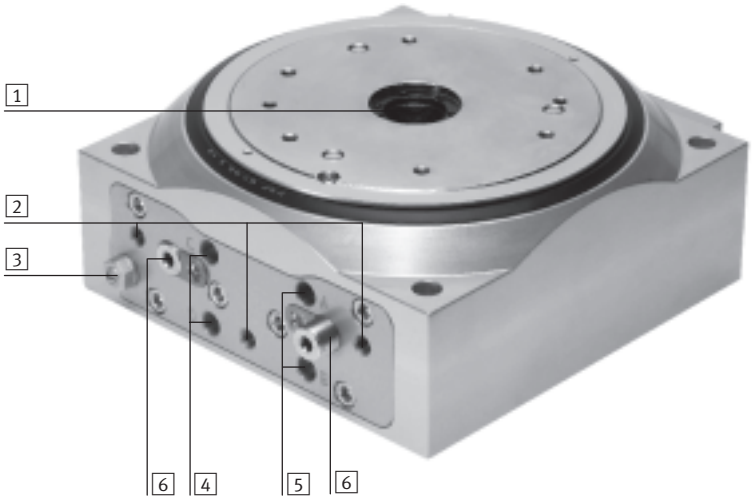

Overload protection

To prevent the rotary indexing table from being damaged by an excessive mass moment of inertia, e.g. during setting operation or in the event of shock absorber failure, sizes 140 and 220 feature overload protection.
If the mass moment of inertia is too large, the securing pin is pressed against the spring force by the resulting radial force. It then slides forward on the toothed segment. This shift in position between the index plate and toothed segment means that the securing pin can no longer engage and the rotary indexing table does not move. The table can be made ready for use again by turning it back.

1 Securing pin
2 Spring
3 Toothed segment

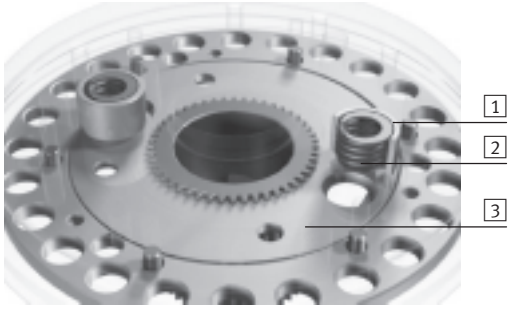

Cushioning adjustment

The rotary indexing tables are equipped with a hydraulic shock absorber. The cushioning characteristics can be adjusted using the stop. This is carried out on the front side.

1 Stop screw
2 Shock absorber

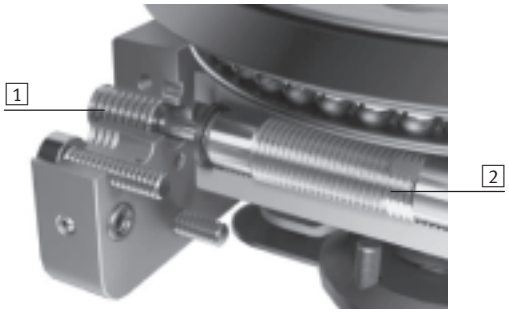

Rotary indexing tables DHTG

Key features

FESTO

Mounting options

Direct mounting from above

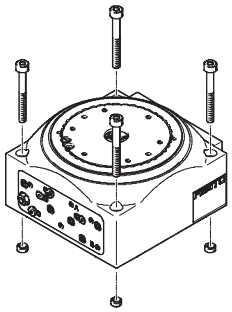

Direct mounting from below

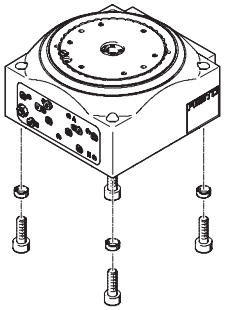

Typical applications

Basic rotary table

- Handling with minimum space requirement

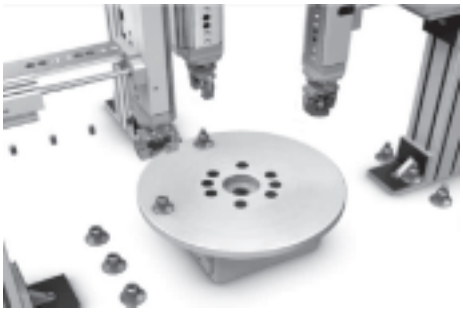

Rotary table with rotary distributor

- For the transfer of compressed air and vacuum to the rotary table
- With 1 or 2 separate ducts



Rotary table with stationary centre section

- For the mounting of handling units or other devices in the centre of the rotary indexing table



Note

The rotary indexing tables are not designed for the following or similar sample applications:

- Machining
- Aggressive media

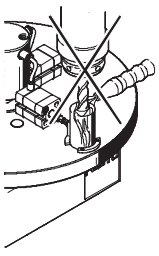

- Grinding dust

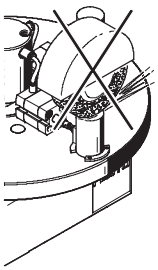

- Welding spatter

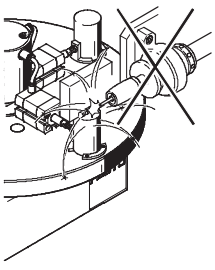

Rotary indexing tables DHTG

Type codes

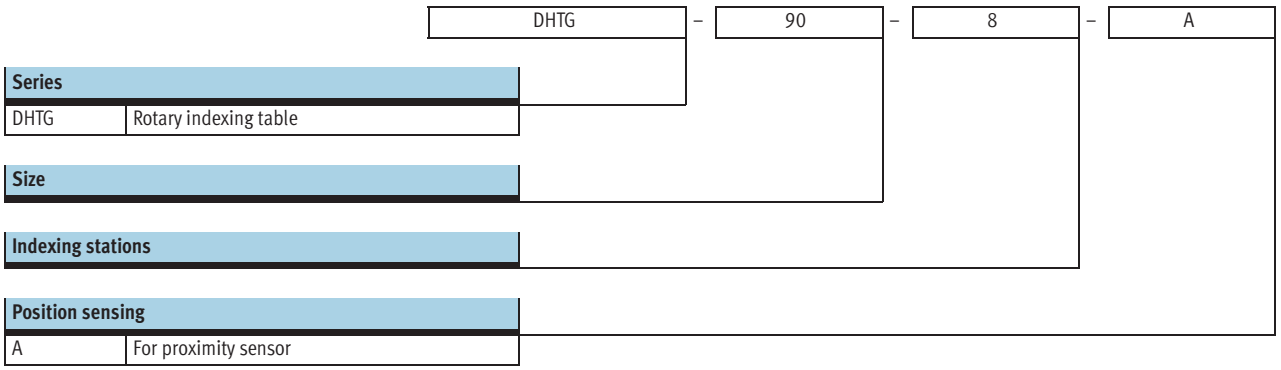

4.Rotary indexing tables DHTG

Peripherals overview

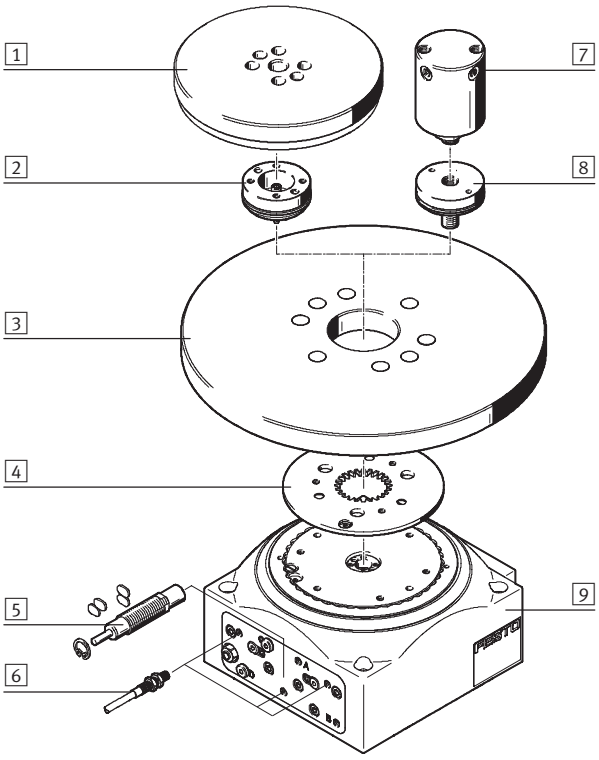

Variants and accessories

	Type	Brief description	➔ Page/Internet
1	Unmachined plate, fixed DADG-UPF	For the mounting of handling units or other devices in the centre of the rotary indexing table	14
2	Adapter kit DADG-AK	For mounting the unmachined plate DADG-UPF on the rotary table	15
3	Unmachined plate, rotating DADG-UPT	Actuators can, depending on the application, be mounted on the unmachined rotating plate	14
4	Indexing conversion kit DADM-CK	The indexing steps can be adjusted at any time using the kit	18
5	Reciprocating motion kit DADM-TK	Allows conversion from movement in one direction to reciprocating movement	18
6	Proximity sensors SIEN	For sensing the switching position of the rotary indexing table	18
7	Rotary distributor GF	Distributes the compressed air conducted through the centre of the rotary indexing table to the actuators on the unmachined rotating plate. Cannot be used in combination with the fixed unmachined plate DADG-UPF	16
8	Adapter kit DADG-AK-...-...G...	For mounting the rotary distributor on the rotary indexing table	17
9	Rotary indexing table DHTG	Flexible range of applications: Anti-clockwise and clockwise rotation or reciprocating motion	6

New

Rotary indexing tables DHTG

Technical data

FESTO

Size
65, 90, 140, 220

Indexing stations
2, 3, 4, 6, 8, 12, 24

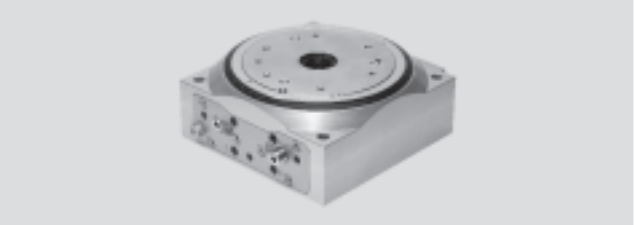

General technical data					
Size		65	90	140	220
Pneumatic connection		M5		G1/8	
Design		Gear coupling			
		Rack and pinion			
		Force-guided motion sequence			
Mode of operation		Double-acting			
Type of mounting		Via through-holes and centring sleeve			
Mounting position		Any			
Cushioning		Adjustable shock absorber stroke, hard characteristic curve			
Indexing stations		2, 3, 4, 6, 8, 12, 24		3, 4, 6, 8, 12, 24	
Torque at 6 bar	[Nm]	2.1	4.4	18.1	58.9
Parallelism of plate[1)]	[mm]	≤ 0.04			
Axial eccentricity of plate[2)]	[mm]	≤ 0.02			
Concentricity of plate[3)]	[mm]	≤ 0.02			
Repetition accuracy of swivel angle	[°]	≤ 0.03			
Max. mass moment of inertia without flow control	[kgm^2]	0.016	0.03	0.3	2.5
Cycle time		→ 8			
Position sensing		For inductive proximity sensors			
Product weight	[kg]	2.0	4.5	10	24

1) Parallelism of the upper plate surface relative to the housing support
2) Measured on the upper surface of the plate at the plate edge relative to the housing support
3) Measured on the internal diameter of the plate relative to the housing

Operating and environmental conditions		
Operating medium		Filtered compressed air, grade of filtration 40 µm, lubricated or unlubricated
Operating pressure	[bar]	4 ... 8
Ambient temperature	[°C]	5 ... 60
Storage temperature	[°C]	–20 ... +80
Protection class		IP54
Corrosion resistance class CRC[1)]		2

1) Corrosion resistance class 2 to Festo standard 940 070
Components subject to moderate corrosion stress. Externally visible parts with primarily decorative surface requirements which are in direct contact with a normal industrial environment or media such as coolants or lubricating agents

Note

In order to be able to operate a large mass moment of inertia with the rotary indexing tables, they must be equipped with an exhaust air flow control valve.

Rotary indexing tables DHTG

Technical data

FESTO

Static characteristic load values

The indicated forces and torques refer to the locked table and can also act on the table plate.

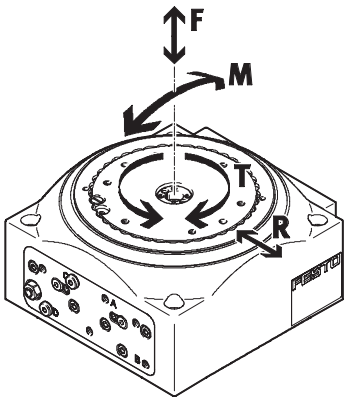

Size		65	90	140	220
Forces					
Max. axial force F	[N]	1,000	2,000	4,000	5,000
Max. radial force R	[N]	2,000	5,000	6,000	8,000
Torques					
Max. tilting moment M	[Nm]	100	150	300	500
Max. tangential moment T	[Nm]	100	150	200	500

Materials

Sectional view

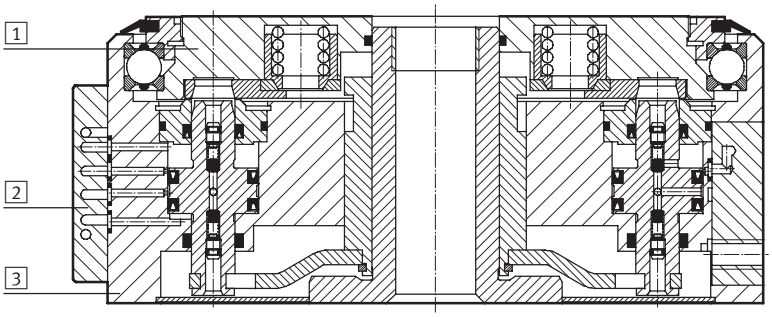

Rotary indexing table		
1	Plate	Galvanised steel
2	Cover	Wrought aluminium alloy
3	Housing	Wrought aluminium alloy
–	Stops	Galvanised steel
–	Seals	Nitrile rubber, polyurethane
	Note on material	Free of copper and PTFE
		Conforms to RoHS

Rotary indexing tables DHTG

Technical data

FESTO

Calculation of the cycle time

The rotary indexing tables are equipped with a hydraulic shock absorber, which means that the max. frequency of the shock absorber must also be taken into account when calculating the cycle time.

The switching time comprises: Switching time = Unlock, rotate, lock and return stroke of working piston. The cycle time is calculated as follows:
Cycle time = Switching time + Processing time + Dwell time.

In the switching frequency graph, the max. achievable switching frequency is read in relation to the mass moment of inertia. From this the switching time can be calculated using $T = 60/f$. The processing time is calculated from the time required by the respective customer application (e.g. time for component removal, press-in time, etc.). A dwell time may be necessary if the cycle time is shorter than the min. possible cycle time.

Calculation example

DHTG-140 with 8 stations and a mass moment of inertia of 0.1 kgm^2.

The customer application requires 300 ms per step for the insertion and removal of parts.

Switching frequency in rpm

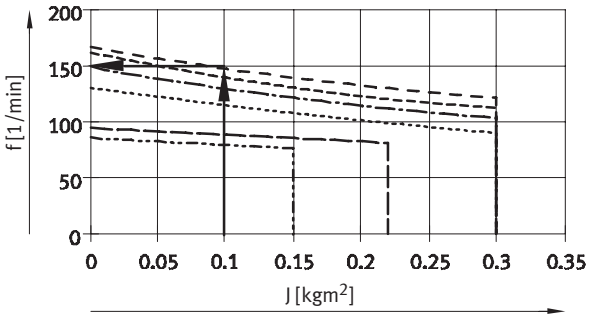

Max. permissible cycle frequency

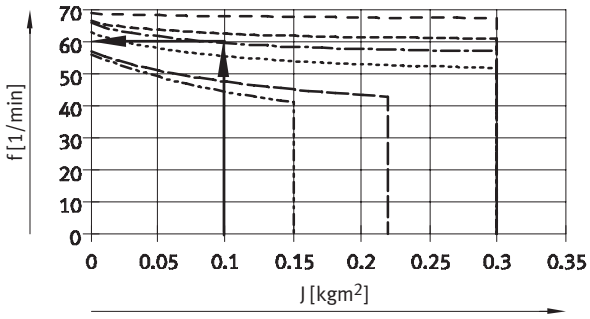

$T_{switching\ time} = \frac{1}{f} = \frac{60s}{130} = 0.461s = 461ms$

$T_{min.\ perm.\ cycle\ time} = \frac{60s}{59} = 1.017s = 1017ms$

Dwell time = Min. permissible cycle time – Switching time – Processing time
Dwell time = 1017 ms – 461 ms – 300 ms = 256 ms.

Given the fact that the switching time + processing time is smaller than the min. permissible cycle time, the rotary indexing table must stay in the end position before the next step is performed. In other words, between the switching an additional dwell time of 256 ms must be allowed for in the control sequence.

Rotary indexing tables DHTG

Technical data

FESTO

Switching frequency f as a function of mass moment of inertia J

Size 65

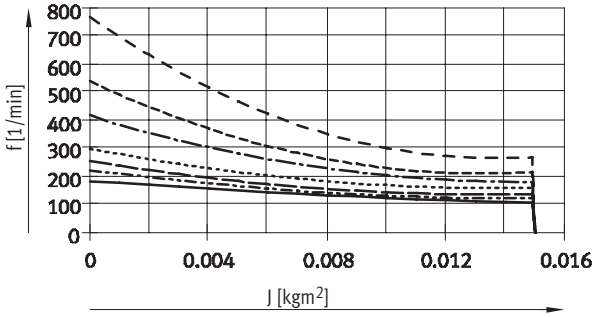

Size 90

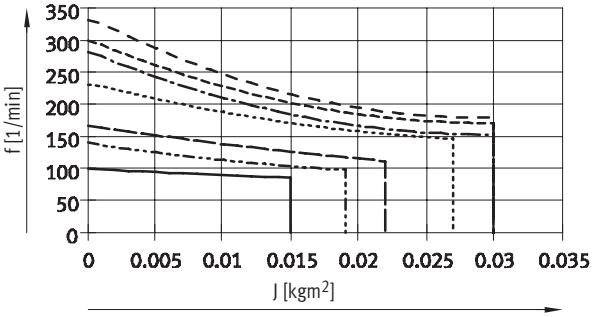

Size 140

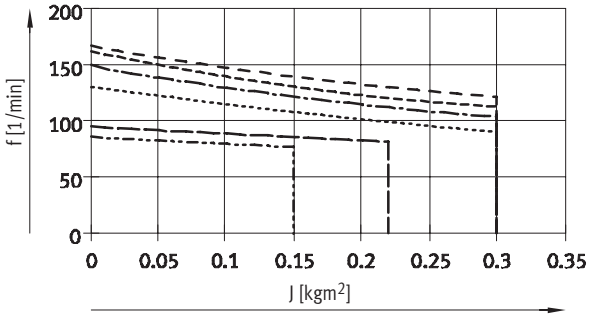

Size 220

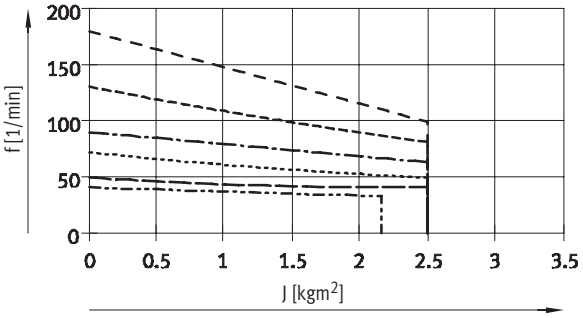

Max. permissible cycle frequency f as a function of mass moment of inertia J

Size 65

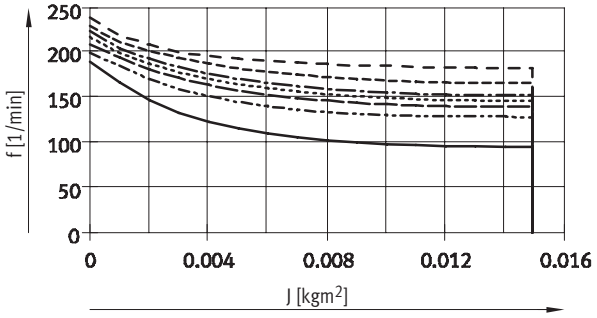

Size 90

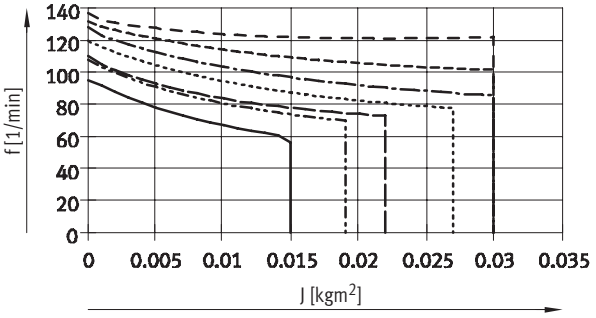

Size 140

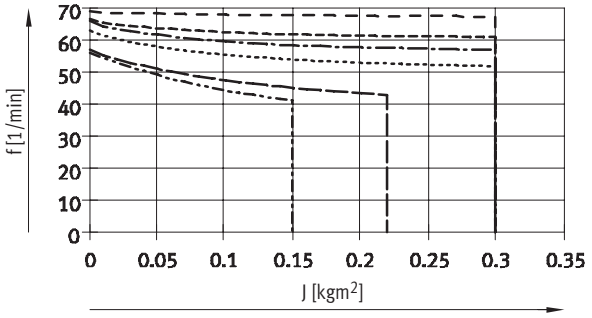

Size 220

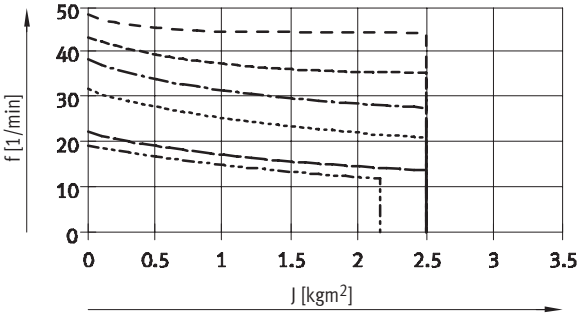

- 2 indexing stations
- 3 indexing stations
- 4 indexing stations
- 6 indexing stations
- 8 indexing stations
- 12 indexing stations
- 24 indexing stations

Rotary indexing tables DHTG

Technical data

FESTO

Dimensions Download CAD data ➔ **www.festo.com**

Size 65

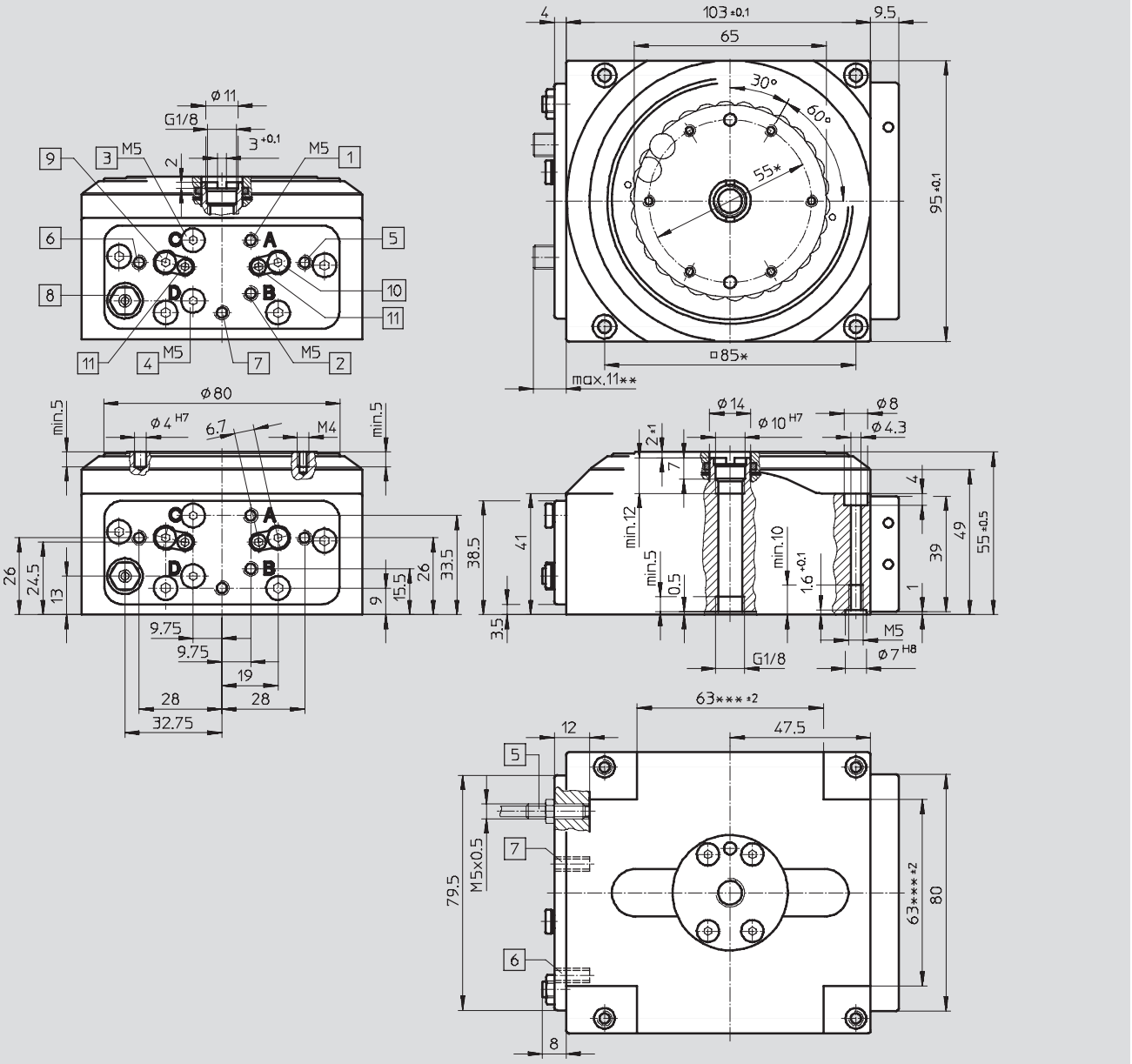

* Tolerance between the centring holes: ±0.02
Tolerance between the threaded holes and countersinks: ±0.2
** Max. projection of shock absorber adjustment
*** 0.1 +0.05 recessed

1 Supply port: unlock and rotate (reciprocating motion: unlock)
2 Supply port: lock and return stroke (reciprocating motion: lock)
3 Blanking plug; (reciprocating motion: supply port for clockwise turning)
4 Blanking plug; (reciprocating motion: supply port for anti-clockwise turning)
5 Sensor turned for clockwise rotation (sensor basic setting for anti-clockwise rotation)
6 Sensor basic setting for clock-wise rotation (sensor turned for anti-clockwise rotation)
7 Sensor lock
8 One-way flow control valve
9 Adjustment of end position cushioning for anti-clockwise operation and reciprocating operation (non-applicable for clockwise rotation)
10 Adjustment of end position cushioning for clockwise operation and reciprocating operation (non-applicable for anti-clockwise rotation)
11 Tightening of end position cushioning 2.5 Nm

Rotary indexing tables DHTG

Technical data

FESTO

Dimensions Download CAD data ➔ **www.festo.com**

Size 90

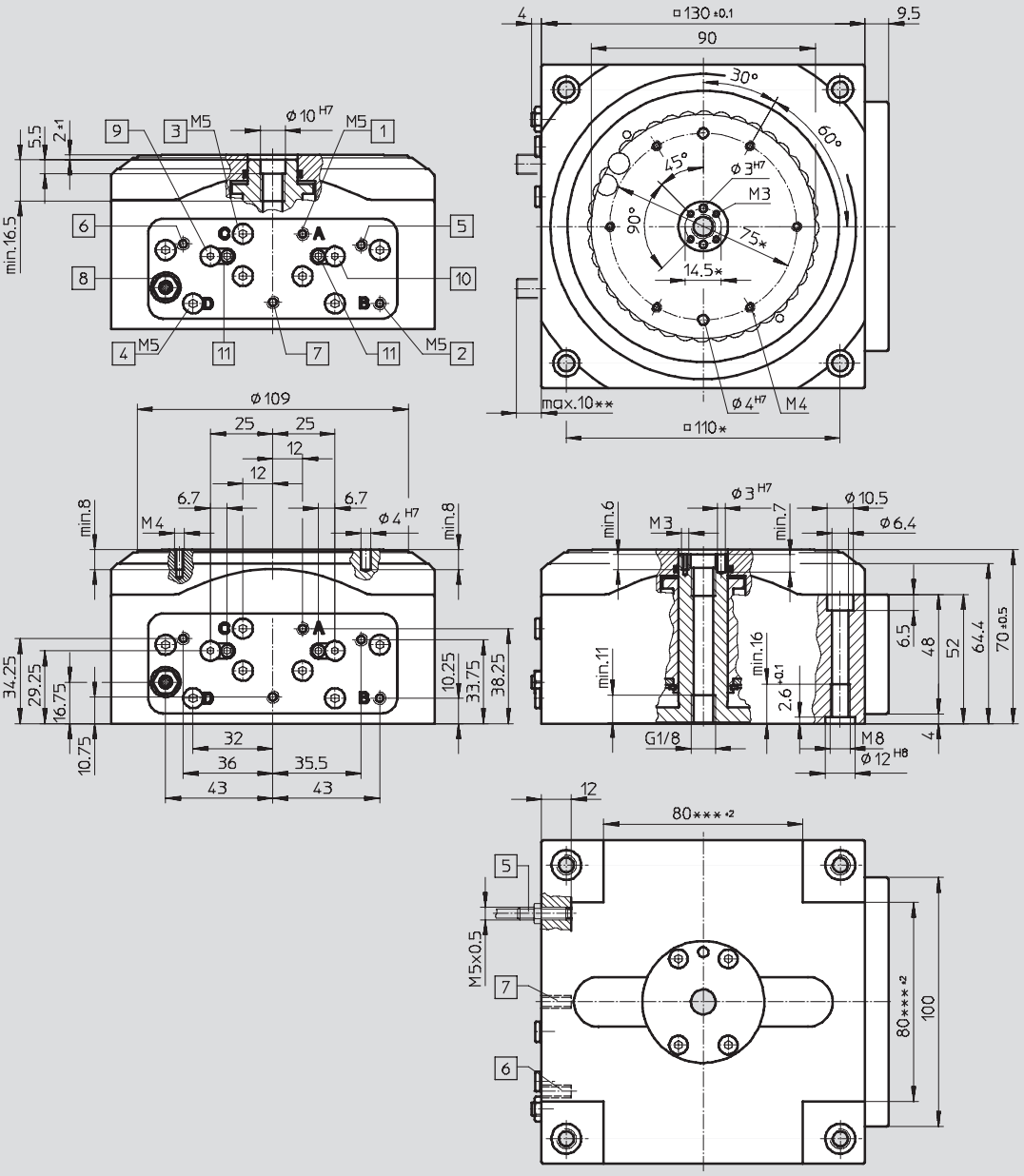

* Tolerance between the centring holes: ±0.02
Tolerance between the threaded holes and countersinks: ±0.2

** Max. projection of shock absorber adjustment

*** 0.1 +0.05 recessed

1 Supply port: unlock and rotate (reciprocating motion: unlock)

2 Supply port: lock and return stroke (reciprocating motion: lock)

3 Blanking plug; (reciprocating motion: supply port for clockwise turning)

4 Blanking plug; (reciprocating motion: supply port for anti-clockwise turning)

5 Sensor turned for clockwise rotation (sensor basic setting for anti-clockwise rotation)

6 Sensor basic setting for clock-wise rotation (sensor turned for anti-clockwise rotation)

7 Sensor lock

8 One-way flow control valve

9 Adjustment of end position cushioning for anti-clockwise operation and reciprocating operation (non-applicable for clockwise rotation)

10 Adjustment of end position cushioning for clockwise operation and reciprocating operation (non-applicable for anti-clockwise rotation)

11 Tightening of end position cushioning 2.5 Nm

Rotary indexing tables DHTG

Technical data

FESTO

Dimensions Download CAD data ➔ **www.festo.com**

Sizes 140, 220

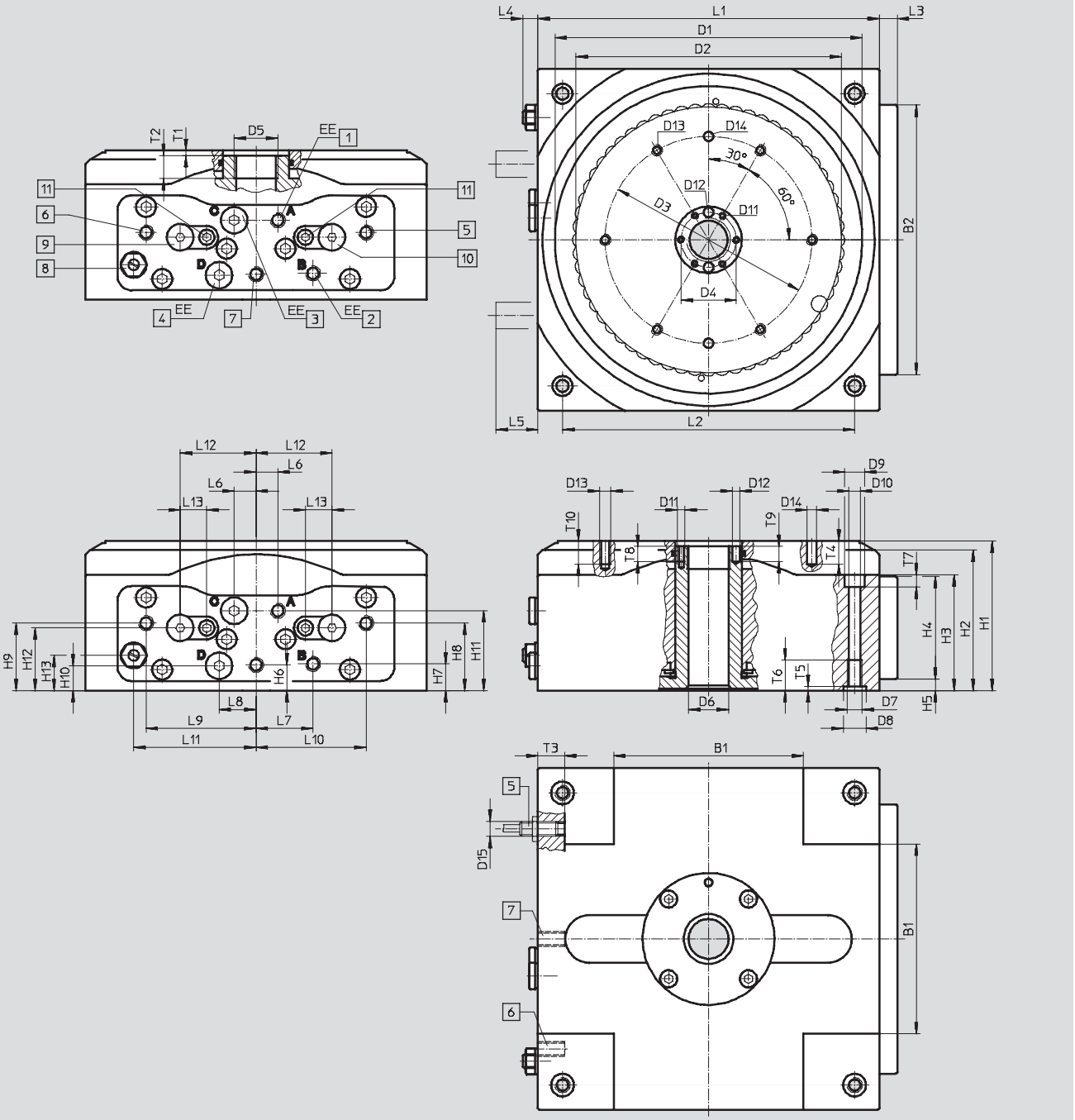

1 Supply port: unlock and rotate (reciprocating motion: unlock)

2 Supply port: lock and return stroke (reciprocating motion: lock)

3 Blanking plug; (reciprocating motion: supply port for clockwise turning)

4 Blanking plug; (reciprocating motion: supply port for anti-clockwise turning)

5 Sensor turned for clockwise rotation (sensor basic setting for anti-clockwise rotation)

6 Sensor basic setting for clockwise rotation (sensor turned for anti-clockwise rotation)

7 Sensor lock

8 One-way flow control valve

9 Adjustment of end position cushioning for anti-clockwise operation and reciprocating operation (non-applicable for clockwise rotation)

10 Adjustment of end position cushioning for clockwise operation and reciprocating operation (non-applicable for anti-clockwise rotation)

11 Tightening of end position cushioning 2.5 Nm

Rotary indexing tables DHTG

Technical data

FESTO

∅	B1[1] ±2	B2	D1 ∅	D2 ∅	D3[2] ∅	D4[2] ∅	D5	D6 ∅	D7	D8 ∅ H8	D9 ∅	D10 ∅	D11
140	100	142	159	140	109	29	M23x1	22	M8	12	10.5	6.4	M4
220	100	212	239	220	165	67	–	58.4	M10	15	13.5	8.4	M5

∅	D12 ∅ H7	D13	D14 ∅ H7	D15	EE	H1 ±0.5	H2	H3	H4	H5	H6	H7	H8
140	4	M6	5	M8x1	G1⁄8	79	74	61	54	6	13.5	14	35.5
220	5	M8	6	M8x1	G1⁄8	89	83.5	68.5	64	4.5	13.5	24.5	15

∅	H9	H10	H11	H12	H13	L1 □ ±0.1	L2[2] □	L3	L4	L5[3] max.	L6	L7	L8	L9
140	35.5	13	42	33	18.5	180	154	9.5	8.25	22	11.5	30	19.5	58
220	15	24.5	50.5	36.5	24	270	228	12	4.6	22	41	41	41	61

∅	L10	L11	L12	L13	T1 ±1	T2 min.	T3 min.	T4 min.	T5 +0.1	T6 min.	T7	T8 min.	T9 min.	T10 min.
140	57.5	64.5	40	14	3	12	14	12	2.1	16	6.5	8	8	12
220	61	99.5	68	14	4	–	19	12	3.1	20	8.5	10	10	13

1) 0.1 +0.05 recessed
2) Tolerance between the centring holes: ±0.02
   Tolerance between the threaded holes and countersinks: ±0.2
3) Max. projection of shock absorber adjustment

Ordering data

	Size	Indexing stations	Part No.	Type
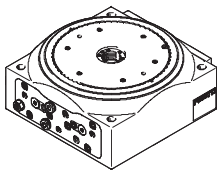	65	2	**548 076**	**DHTG-65-2-A**
		3	**555 448**	**DHTG-65-3-A**
		4	**548 077**	**DHTG-65-4-A**
		6	**548 078**	**DHTG-65-6-A**
		8	**548 079**	**DHTG-65-8-A**
		12	**548 080**	**DHTG-65-12-A**
		24	**548 081**	**DHTG-65-24-A**
	90	2	**548 082**	**DHTG-90-2-A**
		3	**555 449**	**DHTG-90-3-A**
		4	**548 083**	**DHTG-90-4-A**
		6	**548 084**	**DHTG-90-6-A**
		8	**548 085**	**DHTG-90-8-A**
		12	**548 086**	**DHTG-90-12-A**
		24	**548 087**	**DHTG-90-24-A**
	140	3	**555 450**	**DHTG-140-3-A**
		4	**548 088**	**DHTG-140-4-A**
		6	**548 089**	**DHTG-140-6-A**
		8	**548 090**	**DHTG-140-8-A**
		12	**548 091**	**DHTG-140-12-A**
		24	**548 092**	**DHTG-140-24-A**
	220	3	**555 451**	**DHTG-220-3-A**
		4	**548 093**	**DHTG-220-4-A**
		6	**548 094**	**DHTG-220-6-A**
		8	**548 095**	**DHTG-220-8-A**
		12	**548 096**	**DHTG-220-12-A**
		24	**548 097**	**DHTG-220-24-A**

14.Rotary indexing tables DHTG

Accessories

15.Unmachined table
DADG-UPT, rotating
DADG-UPF, fixed

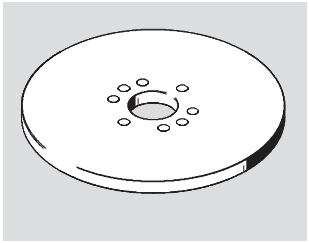

Note

You can order unmachined plates with a standard hole pattern or individual interface via your local contact.

Dimensions Download CAD data ➔ **www.festo.com**

With rotating unmachined plate DADG-UPT

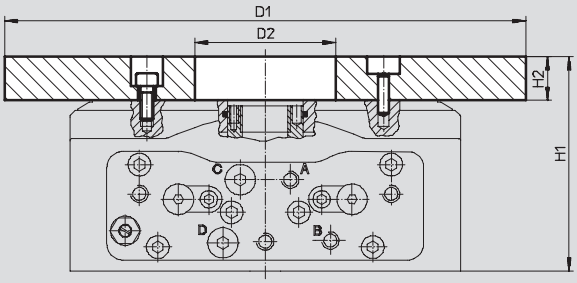

With rotating unmachined plate DADG-UPT and adapter kit DADG-AK for mounting the fixed unmachined plate DADG-UPF

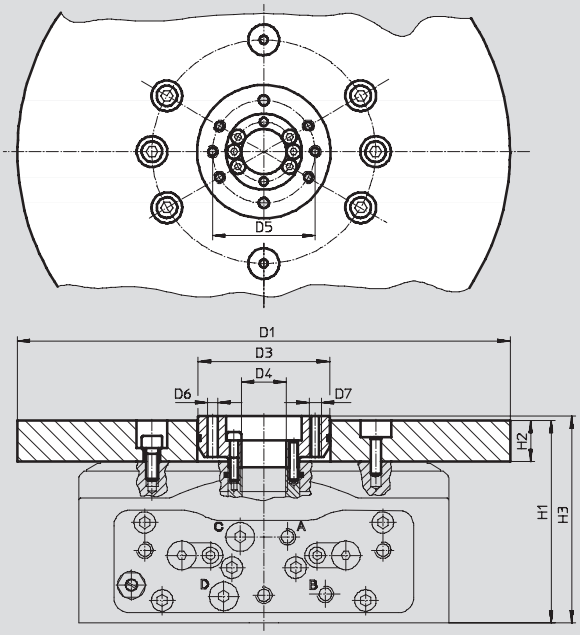

Size	D1[1] ∅ ±0.3	D2 ∅ +0.1	H1 ±0.5	H2[2] ±0.1
With rotating unmachined plate				
DADG-UPT-65	90 ... 170	30.3	70	15
DADG-UPT-90	120 ... 210	40.4	85	15
DADG-UPT-140	170 ... 350	65.3	99	20
DADG-UPT-220	250 ... 550	105.4	103	20

Size	D1[1] ∅ ±0.3	D3 ∅ +0.2	D4 ∅ +0.2	D5 ∅	D6 ∅ H7	D7	H1 ±0.5	H2[2] ±0.1	H3 ±0.5
With rotating unmachined plate and adapter kit									
DADG-UPT-65 DADG-AK-65	90 ... 170	29	5	20	4	M4	70	15	72
DADG-UPT-90 DADG-AK-90	120 ... 210	39	9	30	4	M4	85	15	87
DADG-UPT-140 DADG-AK-140	170 ... 350	64	22	50	5	M6	99	20	101
DADG-UPT-220 DADG-AK-220	250 ... 550	104	58.4	90	6	M8	109	20	111

1) Plate diameter as required
2) Plate thickness can be reduced by up to 5 mm

16.Rotary indexing tables DHTG

Accessories

FESTO

Dimensions Download CAD data ➔ **www.festo.com**

With rotating unmachined plate DADG-UPT and fixed unmachined plate DADG-UPF

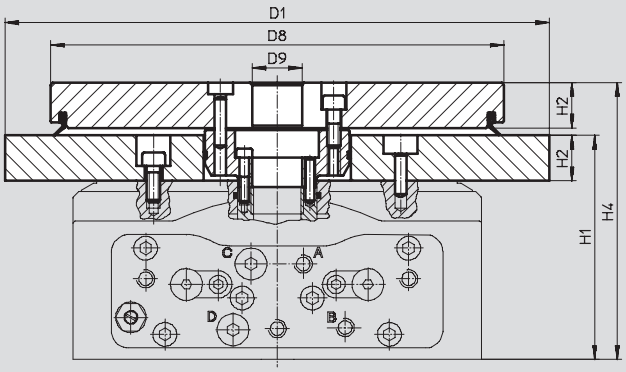

Note

The adapter kit DADG-AK is required for mounting the fixed unmachined plate DADG-UPF.

Size	D1[1] ∅ ±0.3	D8 ∅ ±0.3	D9 ∅ +0.2	H1 ±0.5	H2[2] ±0.1	H4 ±0.5
DADG-UPT-65 DADG-UPF-65 DADG-AK-65	90 ... 170	50 ... 90	5	70	15	87
DADG-UPT-90 DADG-UPF-90 DADG-AK-90	120 ... 210	60 ... 120	10	85	15	102
DADG-UPT-140 DADG-UPF-140 DADG-AK-140	170 ... 350	100 ... 200	22	99	20	121
DADG-UPT-220 DADG-UPF-220 DADG-AK-220	250 ... 550	140 ... 300	60	109	20	131

1) Plate diameter as required
2) Plate thickness can be reduced by up to 5 mm

17.Ordering data – Adapter kit DADG-AK

	For size	Part No.	Type
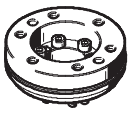	65	**555 424**	**DADG-AK-65**
	90	**555 425**	**DADG-AK-90**
	140	**555 426**	**DADG-AK-140**
	220	**555 427**	**DADG-AK-220**

18.Rotary indexing tables DHTG

Accessories

19.Rotary distributor
GF-..., single
GF-...-2, multiple



Dimensions Download CAD data ➔ **www.festo.com**

With rotary distributor GF-... (single) and adapter kit DADG-AK-...

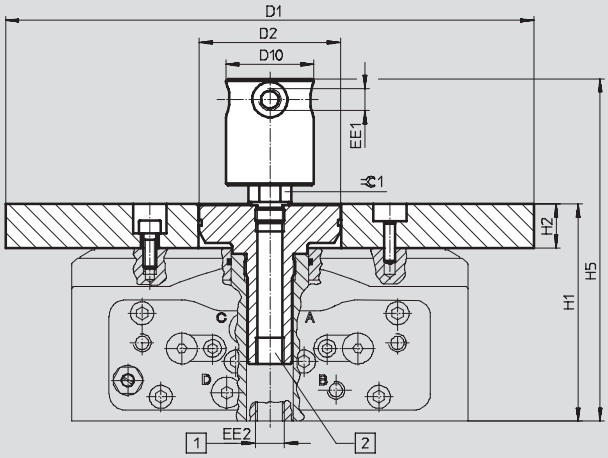

With rotary distributor GF-⅛-2 (multiple) and adapter kit DADG-AK-220-2G18 – For size 220

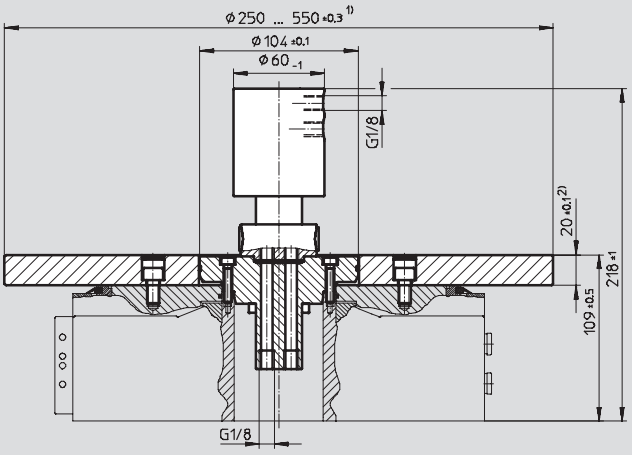

1 External supply port for DHTG-65/90
2 Internal supply port for DHTG-140/220

Size	D1 1) ∅ ±0.3	D2	D10 ∅ +0.2	EE1	EE2	H1 ±0.5	H2 2) ±0.1	H5 ±1	⌀C 1
DADG-UPT-65 DADG-AK-65-1G18 GF-⅛-M5	90 ... 170	29	40	M5	G⅛	70	15	127.5	17
DADG-UPT-90 DADG-AK-90-1G18 GF-⅛-M5	120 ... 210	39	40	M5	G⅛	85	15	142.5	17
DADG-UPT-140 DADG-AK-140-1G14 GF-¼-⅛	170 ... 350	64	40	G⅛	G¼	99	20	155.5	17
DADG-UPT-220 DADG-AK-220-1G12 GF-½-¼	250 ... 550	104	60	G¼	G½	109	20	187.5	27

1) Plate diameter as required
2) Plate thickness can be reduced by up to 5 mm

20.Rotary indexing tables DHTG

Accessories

FESTO

Ordering data – Rotary distributor GF			
	For size	Part No.	Type
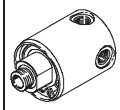	Single		
	65, 90	**539 290**	**GF-⅛-M5**
	140	**539 291**	**GF-¼-⅛**
	220	**539 292**	**GF-½-¼**
	Multiple		
	220	**539 287**	**GF-⅛-2**

21.Ordering data – Adapter kit DADG-AK			
	For size	Part No.	Type
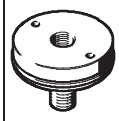	Single		
	65	**555 428**	**DADG-AK-65-1G18**
	90	**555 429**	**DADG-AK-90-1G18**
	140	**555 430**	**DADG-AK-140-1G14**
	220	**555 431**	**DADG-AK-220-1G12**
	Multiple		
	220	**555 432**	**DADG-AK-220-2G18**

22.Rotary indexing tables DHTG

Accessories

FESTO

Ordering data

	For size	Indexing stations	Part No.	Type
23.Indexing conversion kit DADM-CK				
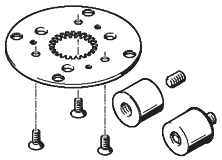	65	2	**548 098**	**DADM-CK-65-2**
		3	**554 389**	**DADM-CK-65-3**
		4	**548 099**	**DADM-CK-65-4**
		6	**548 100**	**DADM-CK-65-6**
		8	**548 101**	**DADM-CK-65-8**
		12	**548 102**	**DADM-CK-65-12**
		24	**548 103**	**DADM-CK-65-24**
	90	2	**548 104**	**DADM-CK-90-2**
		3	**555 445**	**DADM-CK-90-3**
		4	**548 105**	**DADM-CK-90-4**
		6	**548 106**	**DADM-CK-90-6**
		8	**548 107**	**DADM-CK-90-8**
		12	**548 108**	**DADM-CK-90-12**
		24	**548 109**	**DADM-CK-90-24**
	140	3	**555 446**	**DADM-CK-140-3**
		4	**548 110**	**DADM-CK-140-4**
		6	**548 111**	**DADM-CK-140-6**
		8	**548 112**	**DADM-CK-140-8**
		12	**548 113**	**DADM-CK-140-12**
		24	**548 114**	**DADM-CK-140-24**
	220	3	**555 447**	**DADM-CK-220-3**
		4	**548 115**	**DADM-CK-220-4**
		6	**548 116**	**DADM-CK-220-6**
		8	**548 117**	**DADM-CK-220-8**
		12	**548 118**	**DADM-CK-220-12**
		24	**548 119**	**DADM-CK-220-24**
24.Reciprocating motion kit DADM-TK				
	65	–	**548 120**	**DADM-TK-65**
	90		**548 121**	**DADM-TK-90**
	140		**563 304**	**DADM-TK-140**
	220		**563 305**	**DADM-TK-220**

25.Ordering data – Proximity sensors, inductive Technical data ➔ Internet: sien

	For size	Contact	Connection	Part No.	Type
	65, 90	N/O contact	Cable	**150 370**	**SIEN-M5B-PS-K-L**
			Plug	**150 371**	**SIEN-M5B-PS-S-L**
		N/C contact	Cable	**150 374**	**SIEN-M5B-PO-K-L**
			Plug	**150 375**	**SIEN-M5B-PO-S-L**
	140, 220	N/O contact	Cable	**150 386**	**SIEN-M8B-PS-K-L**
			Plug	**150 387**	**SIEN-M8B-PS-S-L**
		N/C contact	Cable	**150 390**	**SIEN-M8B-PO-K-L**
			Plug	**150 391**	**SIEN-M8B-PO-S-L**

26.Ordering data – Connecting cables Technical data ➔ Internet: nebu

	Electrical connection, left	Electrical connection, right	Cable length [m]	Part No.	Type
	Straight socket, M8x1, 3-pin	Cable, open end, 3-wire	2.5	**541 333**	**NEBU-M8G3-K-2.5-LE3**
			5	**541 334**	**NEBU-M8G3-K-5-LE3**
	Angled socket, M8x1, 3-pin	Cable, open end, 3-wire	2.5	**541 338**	**NEBU-M8W3-K-2.5-LE3**
			5	**541 341**	**NEBU-M8W3-K-5-LE3**

Product Range and Company Overview

A Complete Suite of Automation Services

Our experienced engineers provide complete support at every stage of your development process, including: conceptualization, analysis, engineering, design, assembly, documentation, validation, and production.



Custom Automation Components
Complete custom engineered solutions



Custom Control Cabinets
Comprehensive engineering support and on-site services



Complete Systems
Shipment, stocking and storage services

The Broadest Range of Automation Components

With a comprehensive line of more than 30,000 automation components, Festo is capable of solving the most complex automation requirements.



Electromechanical
Electromechanical actuators, motors, controllers & drives



Pneumatics
Pneumatic linear and rotary actuators, valves, and air supply



PLCs and I/O Devices
PLC's, operator interfaces, sensors and I/O devices

Supporting Advanced Automation... As No One Else Can!
Festo is a leading global manufacturer of pneumatic and electromechanical systems, components and controls for industrial automation, with more than 12,000 employees in 56 national headquarters serving more than 180 countries. For more than 80 years, Festo has continuously elevated the state of manufacturing with innovations and optimized motion control solutions that deliver higher performing, more profitable automated manufacturing and processing equipment. Our dedication to the advancement of automation extends beyond technology to the education and development of current and future automation and robotics designers with simulation tools, teaching programs, and on-site services.

Quality Assurance, ISO 9001 and ISO 14001 Certifications

Festo Corporation is committed to supply all Festo products and services that will meet or exceed our customers' requirements in product quality, delivery, customer service and satisfaction.

To meet this commitment, we strive to ensure a consistent, integrated, and systematic approach to management that will meet or exceed the requirements of the ISO 9001 standard for Quality Management and the ISO 14001 standard for Environmental Management.

9001: CERTCC5-16248-2006-AQ-ESN-TGA
ISO 9001
ISO 14001
DNV
Certified Company
14001: CERTCC5-16248A-2006-AQ-ESN-TGA

© Copyright 2008, Festo Corporation. While every effort is made to ensure that all dimensions and specifications are correct, Festo cannot guarantee that publications are completely free of any error, in particular typing or printing errors. Accordingly, Festo cannot be held responsible for the same. For Liability and Warranty conditions, refer to our "Terms and Conditions of Sale", available from your local Festo office. All rights reserved. No part of this publication may be reproduced, distributed, or transmitted in any form or by any means, electronic, mechanical, photocopying or otherwise, without the prior written permission of Festo. All technical data subject to change according to technical update.

FSC Printed on recycled paper at New Horizon Graphic, Inc., FSC certified as an environmentally friendly printing plant.

Festo North America

United States

Customer Resource Center
502 Earth City Expy., Suite 125
Earth City, MO 63045

For ordering assistance, or to find
your nearest Festo Distributor,
Call: 1.800.99.FESTO
Fax: 1.800.96.FESTO
Email: customer.service@us.festo.com

For technical support,
Call: 1.866.GO.FESTO
Fax: 1.800.96.FESTO
Email: product.support@us.festo.com

Headquarters
Festo Corporation
395 Moreland Road
P.O. Box 18023
Hauppauge, NY 11788
www.festo.com/us

Sales Offices

Appleton
N. 922 Tower View Drive, Suite N
Greenville, WI 54942

Boston
120 Presidential Way, Suite 330
Woburn, MA 01801

Chicago
1441 East Business Center Drive
Mt. Prospect, IL 60056

Dallas
1825 Lakeway Drive, Suite 600
Lewisville, TX 75057

Detroit - Automotive Engineering Center
2601 Cambridge Court, Suite 320
Auburn Hills, MI 48326

New York
395 Moreland Road
Hauppauge, NY 11788

Silicon Valley
4935 Southfront Road, Suite F
Livermore, CA 94550

Design and Manufacturing Operations



East: 395 Moreland Road, Hauppauge, NY 11788



Central: 1441 East Business Center Drive, Mt. Prospect, IL 60056



West: 4935 Southfront Road, Suite F, Livermore, CA 94550

Mexico

Headquarters
Festo Pneumatic, S.A.
Av. Ceylán 3, Col. Tequesquinahuac
54020 Tlalnepantla, Edo. de México
Call: 011 52 [55] 53 21 66 00
Fax: 011 52 [55] 53 21 66 65
Email: festo.mexico@mx.festo.com
www.festo.com/mx



Canada

Headquarters
Festo Inc.
5300 Explorer Drive
Mississauga, Ontario L4W 5G4
Call: 1.905.624.9000
Fax: 1.905.624.9001
Email: info.ca@ca.festo.com
www.festo.com/ca



Festo Worldwide

Argentina Australia Austria Belarus Belgium Brazil Bulgaria Canada Chile China Colombia Croatia Czech Republic Denmark Estonia Finland France Germany Great Britain Greece Hong Kong Hungary India Indonesia Iran Ireland Israel Italy Japan Latvia Lithuania Malaysia Mexico Netherlands New Zealand Norway Peru Philippines Poland Romania Russia Serbia Singapore Slovakia Slovenia South Africa South Korea Spain Sweden Switzerland Taiwan Thailand Turkey Ukraine United States Venezuela

www.festo.com