Filters MS-LF/LFM/LFX, MS series

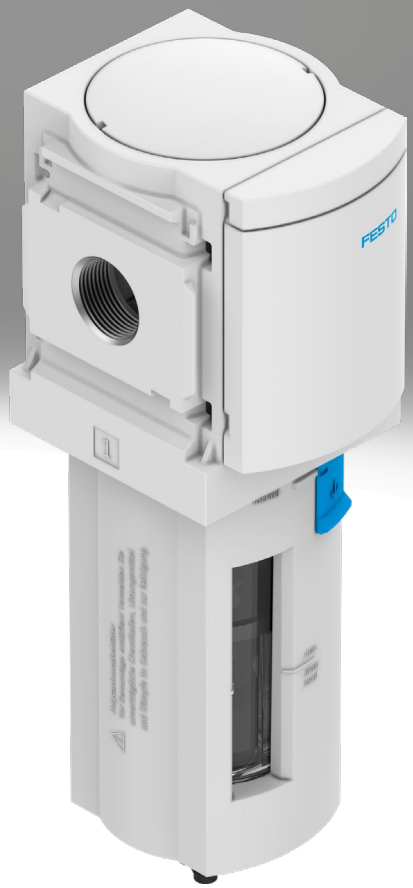

Key features

Service unit components of the MS series

Solutions for every application

With its large product range, highly effective components and a wide choice of functions, the Festo MS series offers a complete concept for compressed air preparation. It is suitable for simple standard applications as well as for application-specific solutions with very high-quality requirements.

Available as individual components, pre-assembled combinations ex-stock, application-specific combinations or complete ready-to-install solutions. The five sizes in the MS series achieve maximum flow rates with low space requirements.

Freely combinable functional modules

Pressure regulators, on/off and soft-start valves with safety function, filters, pressure and flow sensors, dryers, sensors and lubricators can be assembled into a suitable solution for every task. Thanks to the modular structure the components can be combined as required. The simple connection system saves time because there is no need to disassemble the entire combination when replacing individual modules.
Many of the components are also UL and ATEX certified.

CAD models and configurator

Convenient tools for planning and selecting application-specific individual components and combinations. The product configurator can be used to configure customised solutions quickly and to transfer the order data without any hassle.

Engineering tools

Selection tool for choosing the right service unit combination without oversizing, and with the right air purity class:
➔ www.festo.com/engineering/service unit

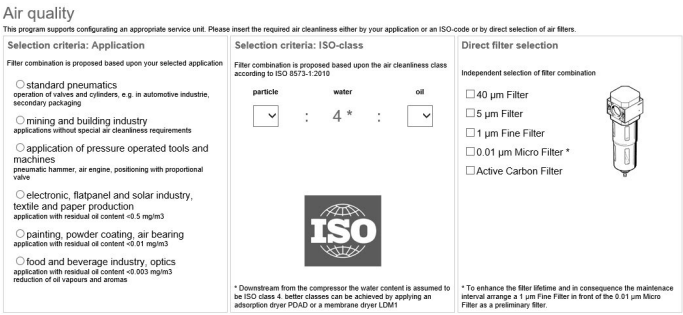

Integrated sensors

Pressure and flow sensors

- Maximum machine availability through controlled processes
- Reliable compressed air preparation and system supply
- Integrated or stand-alone
- Easy to connect with M8/M12 plug

Safety functions

Soft-start/quick exhaust valves MS6-SV/MS9-SV

- Fast and reliable exhausting of systems up to Performance Level e, certified to EN ISO 13849-1
- Integrated soft-start function

Saving energy

Service unit combinations MSE6

- Fully automatic monitoring and regulation of compressed air supply
- Compressed air is automatically shut off in stand-by mode
- Detection and notification of leakages
- Condition monitoring of relevant process data

Intelligent mix of sizes

- Optimum flow rate with a size that is up to 18% smaller
- Excellent energy efficiency
- Cost-optimised combinations – save up to 30%!

Size differences

Size	MS2	MS4	MS6	MS9	MS12
Grid dimension [mm]	25	40	62	90	124
Connection sizes	M5, QS-6	G1/8, G1/4, G3/8	G1/4, G3/8, G1/2, G3/4	G1/2, G3/4, G1, G1 1/4, G1 1/2	G1, G1 1/4, G1 1/2, G2
Standard nominal flow rate qnN1) [l/min]	350	1800	6500	20000	22000

1) Using pressure regulator MS-LR as an example

Key features

Note

Information

The next few pages provide a brief overview of the product range for the components of the MS series service units.

You can find detailed information and all the technical data in the documentation for the relevant service unit component.

Accessories such as connecting plates or mounting brackets can be ordered either via the configurator or separately.

Designing a service unit combination

The order of the individual components within a service unit combination is relevant for safety and functionality. The service unit components cannot be combined in any order in the flow direction. They are subject to restrictions and rules.

The configurator for the service unit combination MSB is a reliable and convenient way of combining the individual service unit components and ensures compliance with the applicable rules. As a result, you get a fully assembled unit, including UL or ATEX certification, if necessary. When combining a unit from individually configured and ordered service unit components, the points on the right must be adhered to under all circumstances.

- Regulators MS-LFR/LR/LRP are only permissible in the flow direction with the same or decreasing pressure regulation range
- Filters MS-LFR/LF/LFM/LFX are only permissible in the flow direction with an increasing grade of filtration
- Lubricators MS-LOE are not permitted in the flow direction upstream of a filter MS-LFR/LFM/LF/LFX, water separator MS-LWS or membrane air dryer MS-LDM1
- A micro filter MS-LFM must be installed in the flow direction upstream of an activated carbon filter MS-LFX or membrane air dryer MS-LDM1
- A flow sensor SFAM cannot be installed directly downstream of a regulator MS-LFR/LR; a branching module MS-FRM must be positioned between them
- A soft-start/quick exhaust valve MS-SV must be the last service unit component in the flow direction

Product range for service unit components MS series

Type	Description	Size	Pneumatic connection					
			Push-in connector	Female thread			Connecting plate with thread	
				M	G	NPT	G	NPT
Combinations								
Service unit combinations MSB-FRC								Datasheets ➔ Internet: msb
	Combinations of filter regulator and lubricator	4	–	–	1/8, 1/4	–	–	–
		6	–	–	1/4, 3/8, 1/2	–	–	–
Service unit combinations MSB								Datasheets ➔ Internet: msb
	Certain predefined combinations	4	–	–	1/4	–	–	–
		6	–	–	1/2	–	–	–
	Freely configurable combinations	4	–	–	1/8, 1/4	–	1/8, 1/4, 3/8	1/8, 1/4, 3/8
		6	–	–	1/4, 3/8, 1/2	–	1/4, 3/8, 1/2, 3/4	1/4, 3/8, 1/2, 3/4
		9	–	–	3/4, 1	3/4, 1	1/2, 3/4, 1, 1 1/4, 1 1/2	1/2, 3/4, 1, 1 1/4, 1 1/2
Service unit combinations MSE6								Datasheets ➔ Internet: mse6
	Combinations with fieldbus connection for measuring pressure, flow rate and consumption	6	–	–	–	–	1/2	–

Key features

Product range for service unit components MS series

Type	Description	Size	Pneumatic connection					
			Push-in connector	Female thread			Connecting plate with thread	
				M	G	NPT	G	NPT
Individual devices								
Filter regulators MS-LFR							Datasheets ➔ Internet: ms2-lfr; ms4-lfr; ms6-lfr; ms9-lfr; ms12-lfr	
	Filter and pressure regulator in a single device, grade of filtration 5 or 40 µm	2	QS-6	M5	–	–	–	–
		4	–	–	1/8, 1/4	–	1/8, 1/4, 3/8	1/8, 1/4, 3/8
		6	–	–	1/4, 3/8, 1/2	–	1/4, 3/8, 1/2, 3/4	1/4, 3/8, 1/2, 3/4
		9	–	–	3/4, 1	3/4, 1	1/2, 3/4, 1, 1 1/4, 1 1/2	1/2, 3/4, 1, 1 1/4, 1 1/2
		12	–	–	–	–	1, 1 1/4, 1 1/2, 2	–
Filter regulators MS-LFR-B							Datasheets ➔ Internet: ms4-lfr-b; ms6-lfr-b	
	Filter and pressure regulator in a single device in polymer housing, grade of filtration 5 or 40 µm	4	–	–	1/4	–	–	–
		6	–	–	1/2	–	–	–
Filters MS-LF							Datasheets ➔ Internet: ms4-lf; ms6-lf; ms9-lf; ms12-lf	
	Grade of filtration 5 or 40 µm	4	–	–	1/8, 1/4	–	1/8, 1/4, 3/8	1/8, 1/4, 3/8
		6	–	–	1/4, 3/8, 1/2	–	1/4, 3/8, 1/2, 3/4	1/4, 3/8, 1/2, 3/4
		9	–	–	3/4, 1	3/4, 1	1/2, 3/4, 1, 1 1/4, 1 1/2	1/2, 3/4, 1, 1 1/4, 1 1/2
		12	–	–	–	–	1, 1 1/4, 1 1/2, 2	–
Fine and micro filters MS-LFM							Datasheets ➔ Internet: ms4-lfm; ms6-lfm; ms9-lfm; ms12-lfm	
	Grade of filtration 0.01 or 1 µm	4	–	–	1/8, 1/4	–	1/8, 1/4, 3/8	1/8, 1/4, 3/8
		6	–	–	1/4, 3/8, 1/2	–	1/4, 3/8, 1/2, 3/4	1/4, 3/8, 1/2, 3/4
		9	–	–	3/4, 1	3/4, 1	1/2, 3/4, 1, 1 1/4, 1 1/2	1/2, 3/4, 1, 1 1/4, 1 1/2
		12	–	–	–	–	1, 1 1/4, 1 1/2, 2	–
Activated carbon filters MS-LFX							Datasheets ➔ Internet: ms4-lfx; ms6-lfx; ms9-lfx; ms12-lfx	
	For removing liquid and gaseous oil particles	4	–	–	1/8, 1/4	–	1/8, 1/4, 3/8	1/8, 1/4, 3/8
		6	–	–	1/4, 3/8, 1/2	–	1/4, 3/8, 1/2, 3/4	1/4, 3/8, 1/2, 3/4
		9	–	–	3/4, 1	3/4, 1	1/2, 3/4, 1, 1 1/4, 1 1/2	1/2, 3/4, 1, 1 1/4, 1 1/2
		12	–	–	–	–	1, 1 1/4, 1 1/2, 2	–
Water separator MS-LWS							Datasheets ➔ Internet: ms6-lws; ms9-lws; ms12-lws	
	Removes condensate from compressed air, maintenance-free	6	–	–	1/4, 3/8, 1/2	–	1/4, 3/8, 1/2, 3/4	1/4, 3/8, 1/2, 3/4
		9	–	–	3/4, 1	3/4, 1	1/2, 3/4, 1, 1 1/4, 1 1/2	1/2, 3/4, 1, 1 1/4, 1 1/2
		12	–	–	–	–	1, 1 1/4, 1 1/2, 2	–

Key features

Product range for service unit components MS series

Type	Description	Size	Pneumatic connection					
			Push-in connector	Female thread			Connecting plate with thread	
				M	G	NPT	G	NPT
Individual devices								
Pressure regulators MS-LR								Datasheets ➔ Internet: ms2-lr; ms4-lr; ms6-lr; ms9-lr; ms12-lr
	For setting the required operating pressure, 4 pressure regulation ranges	2	QS-6	M5	–	–	–	–
		4	–	–	1/8, 1/4	–	1/8, 1/4, 3/8	1/8, 1/4, 3/8
		6	–	–	1/4, 3/8, 1/2	–	1/4, 3/8, 1/2, 3/4	1/4, 3/8, 1/2, 3/4
		9	–	–	3/4, 1	3/4, 1	1/2, 3/4, 1, 1 1/4, 1 1/2	1/2, 3/4, 1, 1 1/4, 1 1/2
		12	–	–	–	–	1, 1 1/4, 1 1/2, 2	–
Pressure regulators MS-LR-B								Datasheets ➔ Internet: ms4-lr-b; ms6-lr-b
	For setting the required operating pressure, in polymer housing	4	–	–	1/4	–	–	–
		6	–	–	1/2	–	–	–
Pressure regulators MS-LRB								Datasheets ➔ Internet: ms4-lrb; ms6-lrb
	For configuring a regulator manifold with independent pressure regulation ranges. Pressure output is at the front or rear.	4	–	–	1/4	–	1/8, 1/4, 3/8	–
		6	–	–	1/2	–	1/4, 3/8, 1/2, 3/4	–
Precision pressure regulators MS-LRP								Datasheets ➔ Internet: ms6-lrp
	For precisely setting the required operating pressure, 4 pressure regulation ranges, pressure hysteresis 0.02 bar	6	–	–	1/4, 3/8, 1/2	–	1/4, 3/8, 1/2, 3/4	1/4, 3/8, 1/2, 3/4
Precision pressure regulators MS-LRPB								Datasheets ➔ Internet: ms6-lrpb
	For configuring a regulator manifold with independent pressure regulation ranges. Pressure output is at the front or rear.	6	–	–	1/2	–	1/4, 3/8, 1/2, 3/4	–
Lubricators MS-LOE								Datasheets ➔ Internet: ms4-loe; ms6-loe; ms9-loe; ms12-loe
	Add a precisely dosed amount of oil to the compressed air. The amount of oil mist is proportional to the compressed air flow rate.	4	–	–	1/8, 1/4	–	1/8, 1/4, 3/8	1/8, 1/4, 3/8
		6	–	–	1/4, 3/8, 1/2	–	1/4, 3/8, 1/2, 3/4	1/4, 3/8, 1/2, 3/4
		9	–	–	3/4, 1	3/4, 1	1/2, 3/4, 1, 1 1/4, 1 1/2	1/2, 3/4, 1, 1 1/4, 1 1/2
		12	–	–	–	–	1, 1 1/4, 1 1/2, 2	–

Key features

Product range for service unit components MS series

Type	Description	Size	Pneumatic connection					
			Push-in connector	Female thread			Connecting plate with thread	
				M	G	NPT	G	NPT
Individual devices								
On/off valves MS-EM							Datasheets ➔ Internet: ms4-em; ms6-em; ms9-em; ms12-em	
	Manually actuated on/off valve for pressurising and exhausting pneumatic systems.	4	–	–	1/8, 1/4	–	1/8, 1/4, 3/8	1/8, 1/4, 3/8
		6	–	–	1/4, 3/8, 1/2	–	1/4, 3/8, 1/2, 3/4	1/4, 3/8, 1/2, 3/4
		9	–	–	3/4, 1	3/4, 1	1/2, 3/4, 1, 1 1/4, 1 1/2	1/2, 3/4, 1, 1 1/4, 1 1/2
		12	–	–	–	–	1, 1 1/4, 1 1/2, 2	–
On/off valves MS-EE							Datasheets ➔ Internet: ms4-ee; ms6-ee; ms9-ee; ms12-ee	
	Electrically actuated on/off valve for pressurising and exhausting pneumatic systems.	4	–	–	1/8, 1/4	–	1/8, 1/4, 3/8	1/8, 1/4, 3/8
		6	–	–	1/4, 3/8, 1/2	–	1/4, 3/8, 1/2, 3/4	1/4, 3/8, 1/2, 3/4
		9	–	–	3/4, 1	3/4, 1	1/2, 3/4, 1, 1 1/4, 1 1/2	1/2, 3/4, 1, 1 1/4, 1 1/2
		12	–	–	–	–	1, 1 1/4, 1 1/2, 2	–
On/off valves MS-EE-B							Datasheets ➔ Internet: ms4-ee-b; ms6-ee-b	
	Electrically actuated on/off valve in polymer housing for pressurising and exhausting pneumatic systems.	4	–	–	1/4	–	–	–
		6	–	–	1/2	–	–	–
Soft-start valves MS-DL							Datasheets ➔ Internet: ms4-dl; ms6-dl; ms12-dl	
	Pneumatically actuated soft-start valve for slowly pressurising and exhausting pneumatic systems.	4	–	–	1/8, 1/4	–	1/8, 1/4, 3/8	1/8, 1/4, 3/8
		6	–	–	1/4, 3/8, 1/2	–	1/4, 3/8, 1/2, 3/4	1/4, 3/8, 1/2, 3/4
		12	–	–	–	–	1, 1 1/4, 1 1/2, 2	–
Soft-start valves MS-DE							Datasheets ➔ Internet: ms4-de; ms6-de; ms12-de	
	Electrically actuated soft-start valve for slowly pressurising and exhausting pneumatic systems.	4	–	–	1/8, 1/4	–	1/8, 1/4, 3/8	1/8, 1/4, 3/8
		6	–	–	1/4, 3/8, 1/2	–	1/4, 3/8, 1/2, 3/4	1/4, 3/8, 1/2, 3/4
		12	–	–	–	–	1, 1 1/4, 1 1/2, 2	–
On/off valves MS-EDE-B							Datasheets ➔ Internet: ms4-ede-b; ms6-ede-b	
	Electrically actuated soft-start valve in polymer housing for slowly pressurising and exhausting pneumatic systems.	4	–	–	1/4	–	–	–
		6	–	–	1/2	–	–	–
Soft-start/quick exhaust valves MS-SV							Datasheets ➔ Internet: ms6-sv; ms9-sv	
	For building up pressure gradually and reducing pressure quickly and safely in pneumatic piping systems. Up to category 1, PL c.	6	–	–	1/2	–	1/4, 3/8, 1/2, 3/4	1/4, 3/8, 1/2, 3/4
		9	–	–	3/4, 1	3/4, 1	1/2, 3/4, 1, 1 1/4, 1 1/2	1/2, 3/4, 1, 1 1/4, 1 1/2
	Up to category 3, PL d. Up to category 4, PL e in the case of optional extension.	6	–	–	1/2	–	1/4, 3/8, 1/2, 3/4	1/4, 3/8, 1/2, 3/4
	Up to category 4, PL e.	6	–	–	1/2	–	1/4, 3/8, 1/2, 3/4	–

Key features

Product range for service unit components MS series								
Type	**Description**	**Size**	**Pneumatic connection**					
			Push-in connector	**Female thread**			**Connecting plate with thread**	
				M	**G**	**NPT**	**G**	**NPT**
Individual devices								
Membrane air dryer MS-LDM1							Datasheets ➔ Internet: ms4-ldm; ms6-ldm	
	Wear-free membrane dryer with internal air consumption	4	–	–	1/8, 1/4	–	1/8, 1/4, 3/8	1/8, 1/4, 3/8
		6	–	–	1/4, 3/8, 1/2	–	1/4, 3/8, 1/2, 3/4	1/4, 3/8, 1/2, 3/4
Branching modules MS-FRM							Datasheets ➔ Internet: ms4-frm; ms6-frm; ms9-frm; ms12-frm	
	Compressed air distributors with 4 connections	4	–	–	1/8, 1/4	–	1/8, 1/4, 3/8	–
		6	–	–	1/4, 3/8, 1/2	–	1/4, 3/8, 1/2, 3/4	–
		9	–	–	3/4, 1	3/4, 1	1/2, 3/4, 1, 1 1/4, 1 1/2	1/2, 3/4, 1, 1 1/4, 1 1/2
		12	–	–	–	–	1, 1 1/4, 1 1/2, 2	–
Distributor blocks MS-FRM-FRZ							Datasheets ➔ Internet: ms4-frm-frz; ms6-frm-frz	
	Compressed air distributors with 4 connections and half the grid width	4	–	–	–	–	–	–
		6	–	–	–	–	–	–
Flow sensors SFAM							Datasheets ➔ Internet: sfam	
	For absolute flow rate information and cumulative air consumption measurement	6	–	–	–	–	1/2	1/2
		9	–	–	–	–	1, 1 1/2	1, 1 1/2

Peripherals overview

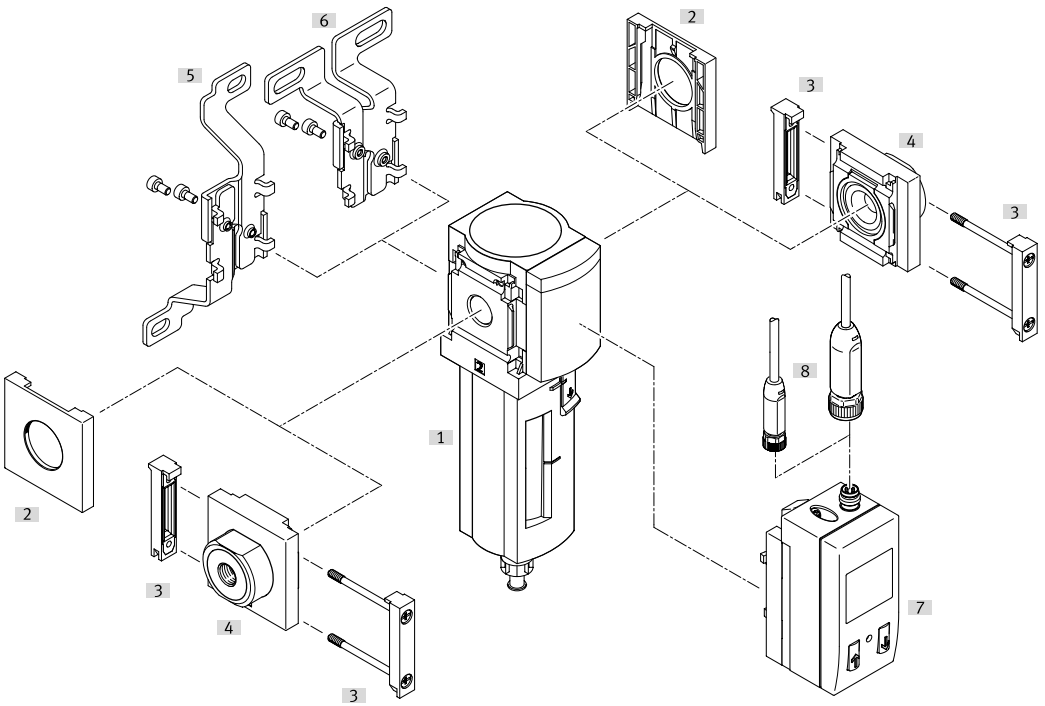

Note

Additional accessories:

- Module connector for combination with sizes MS4/MS6 or MS9 a Internet: amv, rmv, armv
- Adapter for mounting on profiles
  ➔ Internet: ipm-80, ipm-40-80, ipm-80-80

Mounting attachments and accessories

		Individual device		Combination		➔ Page/Internet
		Without connecting plate	With connecting plate	Without connecting plate	With connecting plate	
[1]	Filter MS4/MS6-LF/LFM/LFX	■	■	■	■	11
[2]	Cover cap MS4/6-END	■	–	■	–	ms4-end, ms6-end
[3]	Module connector MS4/6-MV	–	■	■	■	ms4-mv, ms6-mv
[4]	Connecting plate SET MS4/6-AG...	–	■	–	■	ms4-ag, ms6-ag
	Connecting plate SET MS4/6-AQ...	–	■	–	■	ms4-aq, ms6-aq
[5]	Mounting bracket MS4/6-WB	■	■	–	–	ms4-wb, ms6-wb
[6]	Mounting bracket MS4-WBM	■	■	–	–	ms4-wbm
[7]	Filter contamination indicator DP, DN, DPI, DNI	■ for LFM	■ for LFM	■ for LFM	■ for LFM	31
[8]	Connecting cable NEBA-M8...-LE3, NEBA-M12...-LE4	■ for LFM	■ for LFM	■ for LFM	■ for LFM	neba
–	Mounting bracket MS4/6-WP, WPB, WPE, WPM	–	■	■	■	ms4-wp, ms6-wp

Type codes

001	Series	
MS	MS series	

002	Size	
4	Grid dimension 40 mm	

003	Function	
LF	Filter	

004	Pneumatic connection	
1/8	Female thread G1/8	
1/4	Female thread G1/4	
AGA	Sub-base G1/8	
AGB	Sub-base G1/4	
AGC	Sub-base G3/8	
AQK	Sub-base 1/8 NPT	
AQN	Sub-base 1/4 NPT	
AQP	Sub-base 3/8 NPT	

005	Filter design	
C	5 µm	
E	40 µm	

006	Bowl type	
R	Plastic tray with plastic basket	
U	Aluminium	

007	Condensate drain	
H	Semi-automatic	
M	Manual	
V	Fully automatic, normally open	
VC	Fully automatic, normally closed	

008	Type of mounting	
	Without mounting bracket	
WP	Mounting bracket basic design	
WPM	Mounting bracket for hooking in service unit components	
WB	Mounting centrally at rear (wall mounting top and bottom), connecting plates not required	
WBM	Mounting centrally at rear (wall mounting top), connecting plates not required	

009	EU certification	
	None	
EX4	II 2GD	

010	UL certification	
	None	
UL1	cULus ordinary location for Canada and USA	

011	Flow direction	
	Flow direction from left to right	
Z	Flow direction from right to left	

Type codes

001	Series	
MS	MS series	

002	Size	
6	Grid dimension 62 mm	

003	Function	
LF	Filter	

004	Pneumatic connection	
1/4	Female thread G1/4	
3/8	Female thread G3/8	
1/2	Female thread G1/2	
AGB	Sub-base G1/4	
AGC	Sub-base G3/8	
AGD	Sub-base G1/2	
AGE	Sub-base G3/4	
AGF	Sub-base G1	
AQN	Sub-base 1/4 NPT	
AQP	Sub-base 3/8 NPT	
AQR	Sub-base 1/2 NPT	
AQS	Sub-base 3/4 NPT	

005	Filter design	
C	5 µm	
E	40 µm	

006	Bowl type	
R	Plastic tray with plastic basket	
U	Aluminium	

007	Condensate drain	
H	Semi-automatic	
M	Manual	
V	Fully automatic, normally open	
VC	Fully automatic, normally closed	

008	Type of mounting	
	Without mounting bracket	
WP	Mounting bracket basic design	
WPM	Mounting bracket for hooking in service unit components	
WB	Mounting centrally at rear (wall mounting top and bottom), connecting plates not required	

009	EU certification	
	None	
EX4	II 2GD	

010	UL certification	
	None	
UL1	cULus ordinary location for Canada and USA	

011	Flow direction	
	Flow direction from left to right	
Z	Flow direction from right to left	

Additional variants can be ordered using the modular system

Filter LF → Page 22
Fine and micro filters LFM → Page 34
Activated carbon filter LFX → Page 42

- Pneumatic connection
- Condensate drain
- Application area (for LFM and LFX only)
- Filter contamination indicator (for LFM only)
- Type of mounting
- EU certification
- UL certification
- Flow direction

Datasheet

Function
Condensate drain
Manual, rotating

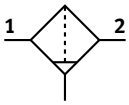

Semi- or fully automatic

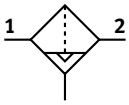

Flow rate
1000 ... 4100 l/min

Temperature range
–10 ... +60 °C

Operating pressure
0 ... 20 bar

www.festo.com

The sintered filter with centrifugal water separator removes contamination, rust and condensate from the compressed air. The filter cartridges can be replaced.

- Good particle and condensate separation
- High flow rate with minimal pressure drop
- Available with manual, semi-automatic, fully automatic, or fully automatic, electrically actuated condensate drain
- Optional device variant EX4 for use in potentially explosive areas in zones 1, 2, 21 and 22
- Choice of filter inserts 5 µm or 40 µm
- New filter cartridges ➔ Page 93

General technical data			
Size		MS4	MS6
Pneumatic connection 1, 2			
	Female thread	G1/8 or G1/4	G1/4, G3/8 or G1/2
	Connecting plate AG...	G1/8, G1/4 or G3/8	G1/4, G3/8, G1/2, G3/4 or G1
	Connecting plate AQ...	1/8 NPT, 1/4 NPT or 3/8 NPT	1/4 NPT, 3/8 NPT, 1/2 NPT or 3/4 NPT
Design		Sintered filter with centrifugal separator	
Type of mounting		With accessories	
		In-line installation	
Mounting position		Vertical ±5°	
Grade of filtration	[µm]	5	
		40	
Pore size	[µm]	< 5	
		< 40	
Air purity class at the output		Compressed air to ISO 8573-1:2010 [6:8:4] (grade of filtration 5 µm)	
		Compressed air to ISO 8573-1:2010 [7:8:4] (grade of filtration 40 µm)	
Bowl guard		Plastic bowl guard	
		Integrated as metal bowl	
Condensate drain		Manual, rotating	
		Manual, non-detenting	
		Semi-automatic	
		Fully automatic	
		–	Fully automatic, electrically actuated
Degree of condensate separation	[%]	> 75	
Max. condensate volume	[cm³]	19 (with plastic bowl guard) 25 (with metal bowl)	38

Note: This product conforms to ISO 1179-1 and ISO 228-1

Standard nominal flow rate qnN[1] [l/min]								
Size		MS4			MS6			
Pneumatic connection		G1/8	G1/4	G3/8	G1/4	G3/8	G1/2	G3/4
Grade of filtration	5 µm	1000	1300	–	2000	3000	3200	–
	40 µm	1100	1700	1700	2500	3800	4100	4100

1) Measured at p1 = 6 bar and Δp = 1 bar

A flow of 125 l/min is required to ensure trouble-free closing of the fully automatic condensate drain.

Datasheet

Operating and environmental conditions							
Condensate drain	Manual, rotating M		Semi-automatic H		Fully automatic V		Fully automatic, electrically actuated E2, E3, E4
Size	MS4	MS6	MS4	MS6	MS4	MS6	MS6
Operating pressure [bar]	0 ... 14 (0 ... 10)[1]	0 ... 20 (0 ... 10)[1]	1.5 ... 12 (1.5 ... 10)[1]	1.5 ... 12 (1.5 ... 10)[1]	2 ... 12 (2 ... 10)[1]	2 ... 12 (2 ... 10)[1]	0.8 ... 16 (0.8 ... 10)[1]
Operating medium	Compressed air to ISO 8573-1:2010 [–:9:–]		Compressed air to ISO 8573-1:2010 [–:9:–]		Compressed air to ISO 8573-1:2010 [7:9:–]		Compressed air to ISO 8573-1:2010 [–:9:–]
	Inert gases						
Ambient temperature [°C]	–10 ... +60		–10 ... +60		–10 ... +60		+1 ... +60
Temperature of medium [°C]	–10 ... +60		–10 ... +60		–10 ... +60		+1 ... +60
Storage temperature [°C]	–10 ... +60		–10 ... +60		–10 ... +60		+1 ... +60
Corrosion resistance class CRC[2]	2						
Food-safe3)	See supplementary material information						–
UL certification3)	c UL us - Recognized (OL)						

1) Value in brackets applies to MS4/MS6-LR with UL certification.
2) More information: www.festo.com/x/topic/crc
3) More information www.festo.com/catalogue/ms-lf → Support/Downloads.

ATEX	
EU certification	EX4
ATEX category for gas	II 2G
Type of (ignition) protection for gas	Ex h IIC T6 Gb X
ATEX category for dust	II 2D
Type of ignition protection for dust	Ex h IIIC T60°C Db X
Explosion-proof ambient temperature	–10 °C ≤ Ta ≤ +60 °C
Explosion protection certification outside the EU	EPL Db (GB) EPL Gb (GB)
CE marking (see declaration of conformity)[1]	To EU Explosion Protection Directive (ATEX)
UKCA marking (see declaration of conformity)[1]	To UK explosion regulations

1) More information www.festo.com/catalogue/ms-lf → Support/Downloads

Weight [g]		
Size	MS4	MS6
Filter with plastic bowl guard R	189	600
Filter with metal bowl U	349	820
Filter with plastic bowl guard R and connecting plates	320	900
Filter with metal bowl U and electrically actuated, fully automatic condensate drain E2, E3, E4	–	1800

Datasheet

Materials

Sectional view

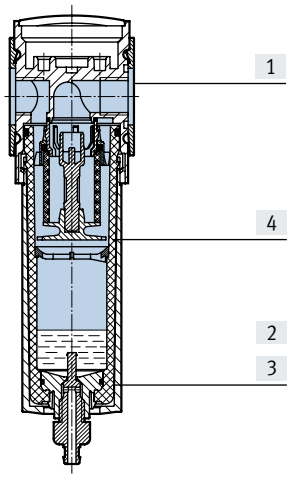

Filter		
[1]	Housing	Die-cast aluminium
[2]	Plastic bowl guard	PC
[3]	Metal bowl	Wrought aluminium alloy, Die-cast aluminium
	Inspection window	PA
[4]	Filter element	PE
–	Seals	NBR
Note on materials		RoHs-compliant
LABS (PWIS) conformity		VDMA24364-B1/B2-L

Standard flow rate qn as a function of differential pressure Δp1–2

Grade of filtration 5 µm

Grade of filtration 40 µm

MS4-LF-1/8

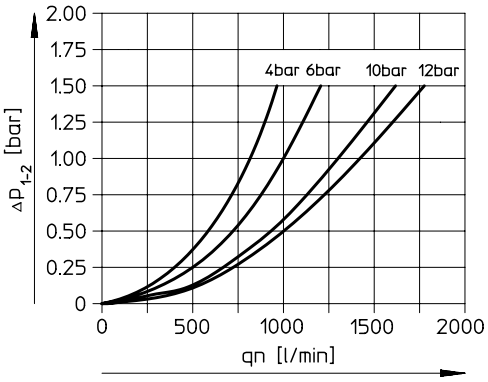

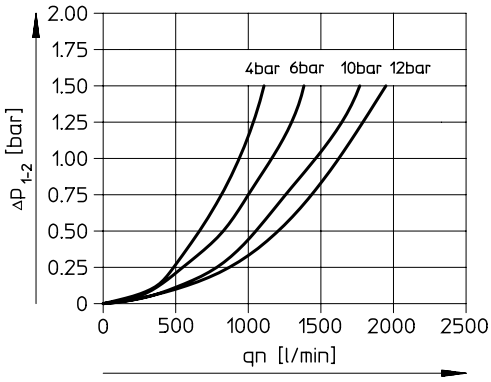

MS4-LF-1/4

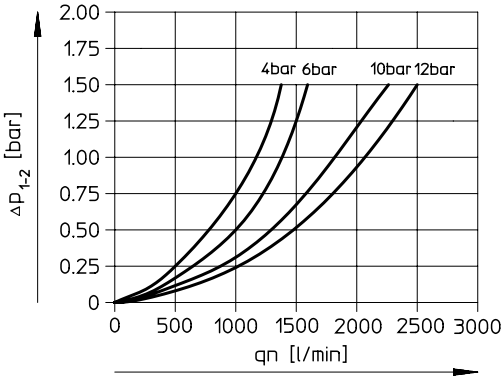

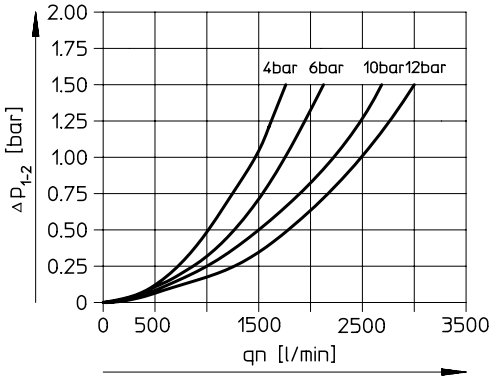

Datasheet

Standard flow rate qn as a function of differential pressure Δp1–2

Grade of filtration 5 µm

Grade of filtration 40 µm

MS6-LF-1/4

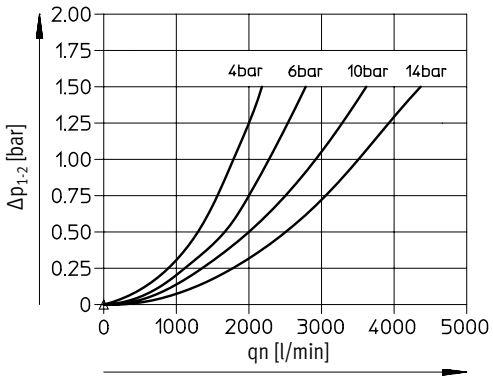

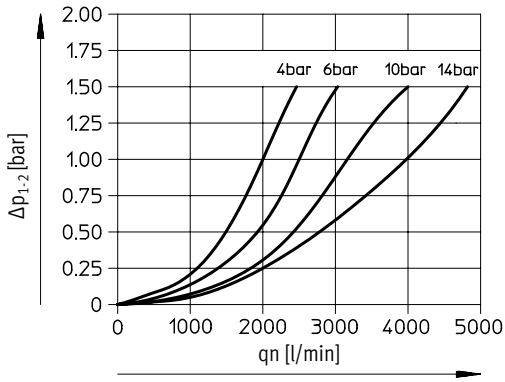

MS6-LF-3/8

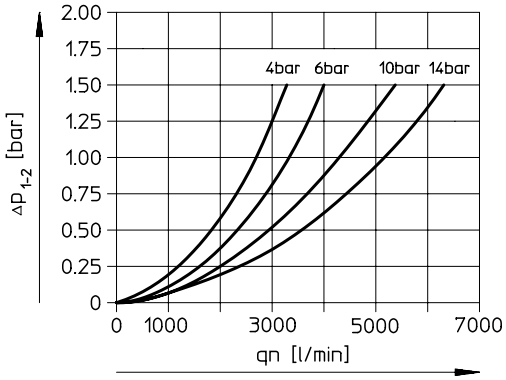

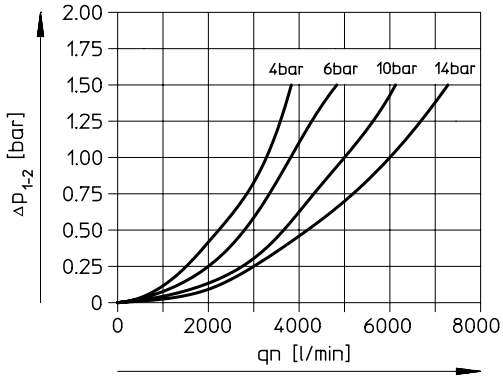

MS6-LF-1/2

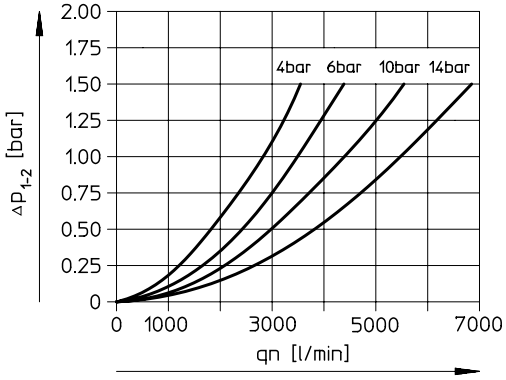

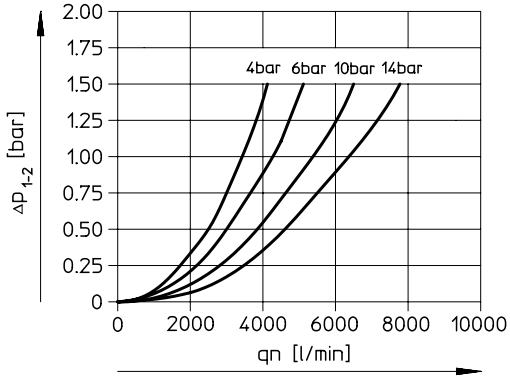

Datasheet

Dimensions – Basic version MS4-LF Download CAD data ➔ www.festo.com

Manual, rotary condensate drain

With plastic bowl guard R

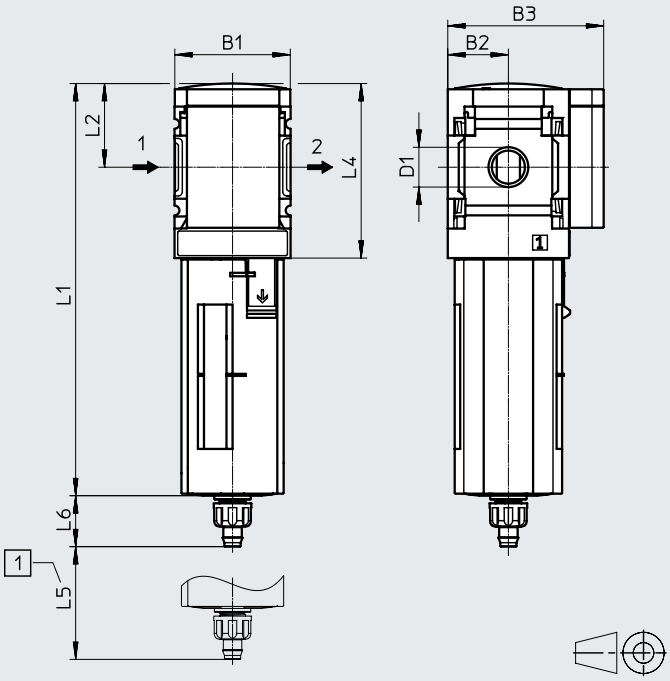

[1] Installation dimension ➔ Flow direction

With metal bowl U

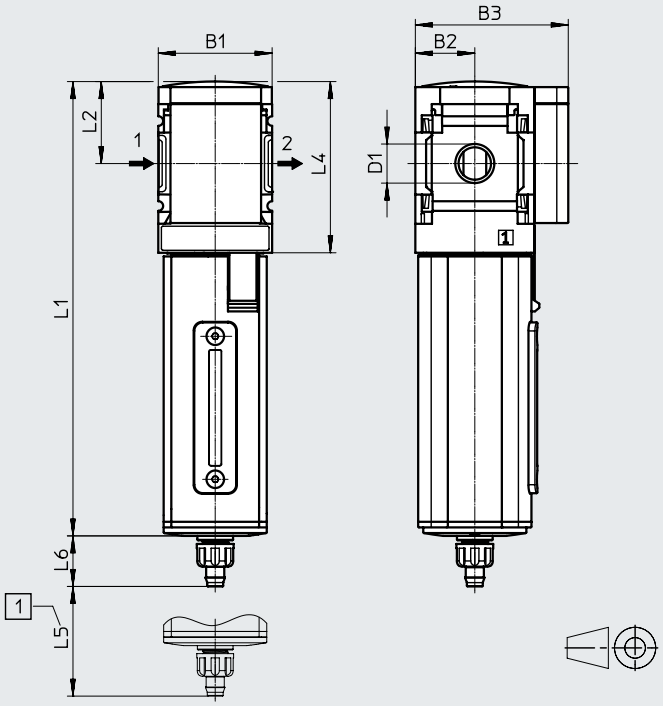

[1] Installation dimension ➔ Flow direction

Type	B1	B2	B3	D1	L1		L2	L4	L5	L6
					Plastic bowl guard	Metal bowl				
MS4-LF-1/8	40	21	54	G1/8	142.8	159.4	29	60.5	≥ 60	17.7
MS4-LF-1/4				G1/4						

Note: This product conforms to ISO 1179-1 and ISO 228-1.

Datasheet

Dimensions – Basic version MS6-LF Download CAD data ➔ www.festo.com

Manual, rotary condensate drain

With plastic bowl guard R

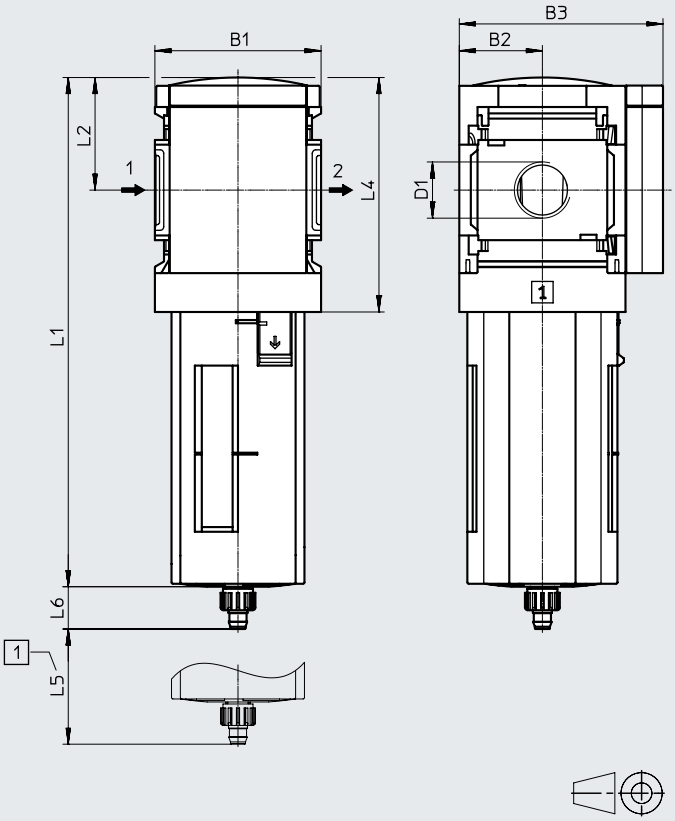

[1] Installation dimension ➔ Flow direction

With metal bowl U

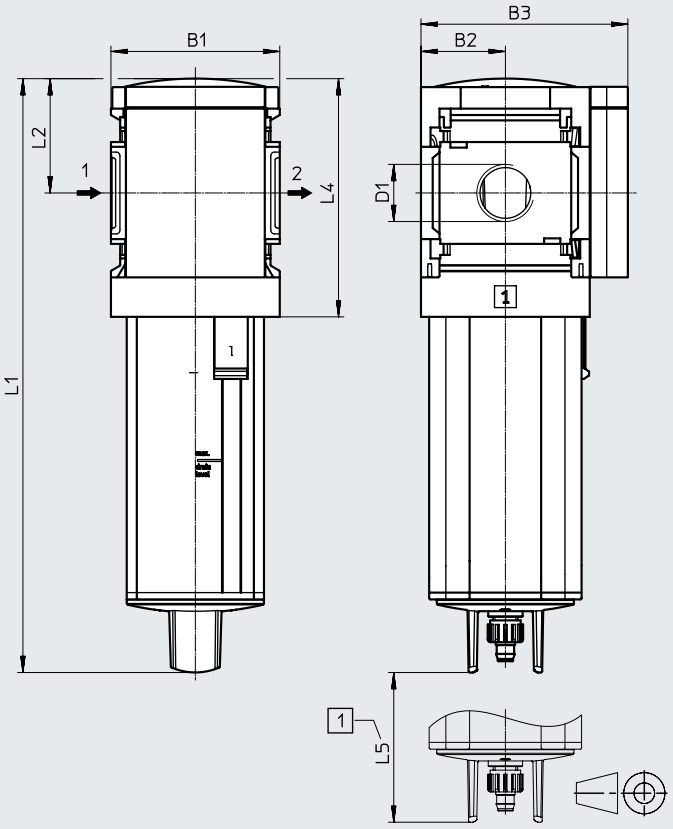

[1] Installation dimension ➔ Flow direction

Type	B1	B2	B3	D1	L1		L2	L4	L5	L6
					Plastic bowl guard	Metal bowl				
MS6-LF-1/4	62	31	76	G1/4	190	218	42	87.5	80	15.8
MS6-LF-3/8				G3/8						
MS6-LF-1/2				G1/2						

Note: This product conforms to ISO 1179-1 and ISO 228-1.

Datasheet

Dimensions – Condensate drain

Download CAD data ➔ www.festo.com

[M] Manual, rotating

MS4-...-R/U-M
MS6-...-R-M

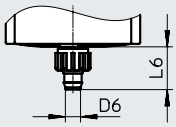

MS6-...-U-M

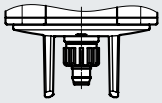

Barbed connector for plastic tubing PUN(-H)-8x1.25

[H] Semi-automatic

MS4-...-R/U-H
MS6-...-R-H

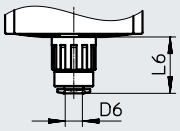

MS6-...-U-H

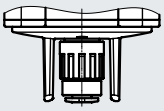

Push-in connector for plastic tubing PUN-6/PAN-6

[V] Fully automatic

MS4-...-R/U-V
MS6-...-R-V

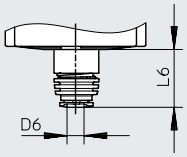

MS6-...-U-V

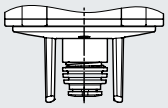

Push-in connector for plastic tubing PUN-6/PAN-6

Type	D6 ⌀	L6
Plastic bowl guard R		
MS4-LF-...-M	5.6	17.7
MS6-LF-...-M		15.8
Metal bowl U		
MS4-LF-...-M	5.6	17.7
MS6-LF-...-M		–

Type	D6 ⌀	L6
Plastic bowl guard R		
MS4-LF-...-H	6.2	22.1
MS6-LF-...-H		20.4
Metal bowl U		
MS4-LF-...-H	6.2	22.1
MS6-LF-...-H		–

Type	D6 ⌀	L6
Plastic bowl guard R		
MS4-LF...-V	6.2	20.4
MS6-LF-...-V		18.5
Metal bowl U		
MS4-LF-...-V	6.2	20.4
MS6-LF-...-V		–

[E2], [E3], [E4] Fully automatic, electrically actuated

Datasheets ➔ Internet: pwea

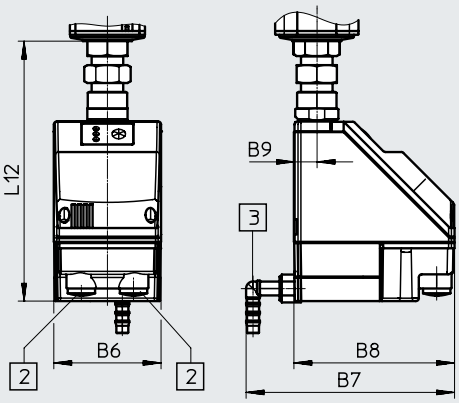

Condensate drain PWEA:
[2] Electrical connection: screw terminal PG9
[3] Connection can be rotated 360° for plastic tubing PUN-H-12x2

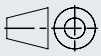

Type	B6	B7	B8	B9	L12
MS6-LF-...-E2, E3, E4	72	140	108	15	174.5

Datasheet

Ordering data
Plastic guard

Size	Condensate drain	Connection	Grade of filtration 5 µm		Grade of filtration 40 µm	
			Part no.	Type	Part no.	Type
Flow direction from left to right						
MS4	Manual, rotating	G1/8	**529403**	**MS4-LF-1/8-CRM**	**529407**	**MS4-LF-1/8-ERM**
		G1/4	**529395**	**MS4-LF-1/4-CRM**	**529399**	**MS4-LF-1/4-ERM**
		G3/8	**–**	**–**	**8232834**	**MS4-LF-AGC-E-R-M**
	Fully automatic	G1/8	**529405**	**MS4-LF-1/8-CRV**	**–**	**–**
		G1/4	**529397**	**MS4-LF-1/4-CRV**	**529401**	**MS4-LF-1/4-ERV**
MS6	Manual, rotating	G1/4	**529623**	**MS6-LF-1/4-CRM**	**529631**	**MS6-LF-1/4-ERM**
		G3/8	**529639**	**MS6-LF-3/8-CRM**	**529647**	**MS6-LF-3/8-ERM**
		G1/2	**529607**	**MS6-LF-1/2-CRM**	**529615**	**MS6-LF-1/2-ERM**
		G3/4	**–**	**–**	**8232877**	**MS6-LF-AGE-E-R-M**
		G1	**8232879**	**MS6-LF-AGF-C-R-M**	**8232880**	**MS6-LF-AGF-E-R-M**
	Fully automatic	G1/4	**529625**	**MS6-LF-1/4-CRV**	**–**	**–**
		G3/8	**529641**	**MS6-LF-3/8-CRV**	**529649**	**MS6-LF-3/8-ERV**
		G1/2	**529609**	**MS6-LF-1/2-CRV**	**529617**	**MS6-LF-1/2-ERV**
		G3/4	**–**	**–**	**8232878**	**MS6-LF-AGE-E-R-V**
		G1	**–**	**–**	**8232881**	**MS6-LF-AGF-E-R-V**
Flow direction from right to left						
MS4	Manual, rotating	G1/4	**–**	**–**	**529400**	**MS4-LF-1/4-ERM-Z**
MS6	Manual, rotating	G1/2	**529608**	**MS6-LF-1/2-CRM-Z**	**529616**	**MS6-LF-1/2-ERM-Z**
	Fully automatic	G1/2	**529610**	**MS6-LF-1/2-CRV-Z**	**529618**	**MS6-LF-1/2-ERV-Z**

Ordering data
Plastic guard

Size	Condensate drain	Connection	Grade of filtration 5 µm		Grade of filtration 40 µm	
			Part no.	Type	Part no.	Type
Flow direction from left to right						
MS4	Manual, rotating	G1/4	**535654**	**MS4-LF-1/4-CUM**	**535660**	**MS4-LF-1/4-EUM**
	Fully automatic	G1/4	**–**	**–**	**535658**	**MS4-LF-1/4-EUV**
MS6	Manual, rotating	G1/2	**529611**	**MS6-LF-1/2-CUM**	**529619**	**MS6-LF-1/2-EUM**
	Fully automatic	G1/2	**529613**	**MS6-LF-1/2-CUV**	**529621**	**MS6-LF-1/2-EUV**
Flow direction from right to left						
MS6	Fully automatic	G1/2	**529614**	**MS6-LF-1/2-CUV-Z**	**–**	**–**

Ordering data – Modular product system

Ordering table						
Grid dimension [mm]	40	62	Conditions	Code		Enter code
Module no.	**527695**	**527668**				
Series	Standard			**MS**		MS
Size	4	6		**...**		
Function	Filter			**-LF**		-LF
Pneumatic connection	Female thread G1/8	–	[1]	**-1/8**		
	Female thread G1/4	Female thread G1/4	[1]	**-1/4**		
	–	Female thread G3/8	[1]	**-3/8**		
	–	Female thread G1/2	[1]	**-1/2**		
	Connecting plate G1/8	–		**-AGA**		
	Connecting plate G1/4	Connecting plate G1/4		**-AGB**		
	Connecting plate G3/8	Connecting plate G3/8		**-AGC**		
	–	Connecting plate G1/2		**-AGD**		
	–	Connecting plate G3/4		**-AGE**		
	–	Connecting plate G1		**-AGF**		
	Connecting plate 1/8 NPT	–	[1]	**-AQK**		
	Connecting plate 1/4 NPT	Connecting plate 1/4 NPT	[1]	**-AQN**		
	Connecting plate 3/8 NPT	Connecting plate 3/8 NPT	[1]	**-AQP**		
	–	Connecting plate 1/2 NPT	[1]	**-AQR**		
	–	Connecting plate 3/4 NPT	[1]	**-AQS**		
Grade of filtration	40 µm			**-E**		
	5 µm			**-C**		
Bowl	Plastic bowl with plastic bowl guard			**-R**		
	Metal bowl			**-U**		
Condensate drain	Manual			**-M**		
	Semi-automatic (P1 max. 12 bar)			**-H**		
	Fully automatic (P1 max. 12 bar) open without pressure			**-V**		
	Fully automatic (P1 max. 12 bar) closed without pressure			**-VC**		
	–	External fully automatic condensate drain, electric, 115 V AC, connection terminals	[1] [2]	**-E2**		
	–	External fully automatic condensate drain, electric, 230 V AC, connection terminals	[1] [2]	**-E3**		
	–	External fully automatic condensate drain, electric, 24 V DC, connection terminals	[1] [2]	**-E4**		
Type of mounting	Mounting bracket standard design		[3]	**-WP**		
	Mounting bracket for hooking in service unit components		[1] [3]	**-WPM**		
	Mounting bracket centrally at the rear (wall mounting top and bottom), connecting plates not required			**-WB**		
	Mounting bracket centrally at the rear (wall mounting top), connecting plates not required	–		**-WBM**		
EU certification	II 2GD to EU Explosion Protection Directive (ATEX)			**-EX4**		
UL certification	cULus, ordinary location for Canada and USA			**-UL1**		
Flow direction	Flow direction from right to left			**-Z**		

[1] 1/8, 1/4, 3/8, 1/2, AQK, AQN, AQP, AQR, AQS, E2, E3, E4, WPM
Not with EU EX4 certification

[2] E2, E3, E4 Only with metal bowl U

[3] WP, WPM Only with connecting plate AGA, AGB, AGC, AGD, AGE, AQK, AQN, AQP, AQR or AQS

Type codes

001	Series	
MS	MS series	

002	Size	
4	Grid dimension 40 mm	

003	Function	
LFM	Fine and micro filters	

004	Pneumatic connection	
1/8	Female thread G1/8	
1/4	Female thread G1/4	
AGA	Sub-base G1/8	
AGB	Sub-base G1/4	
AGC	Sub-base G3/8	
AQK	Sub-base 1/8 NPT	
AQN	Sub-base 1/4 NPT	
AQP	Sub-base 3/8 NPT	

005	Filter design	
A	0.01 µm	
B	1 µm	

006	Bowl type	
R	Plastic tray with plastic basket	
U	Aluminium	

007	Condensate drain	
H	Semi-automatic	
M	Manual	
V	Fully automatic, normally open	
VC	Fully automatic, normally closed	

008	Filter change sensing	
	None	
DA	Differential pressure display, visual	
DN	Filter contamination indicator, M8 plug, NPN, 3-pin	
DNI	Filter contamination indicator, M12 plug, NPN, 4-pin, analogue output 4...20 mA	
DP	Filter contamination indicator, M8 plug, PNP, 3-pin	
DPI	Filter contamination indicator, M12 plug, PNP, 4-pin, analogue output 4...20 mA	

009	Type of mounting	
	Without mounting bracket	
WP	Mounting bracket basic design	
WPM	Mounting bracket for hooking in service unit components	
WB	Mounting centrally at rear (wall mounting top and bottom), connecting plates not required	
WBM	Mounting centrally at rear (wall mounting top), connecting plates not required	

010	EU certification	
	None	
EX4	II 2GD	

011	UL certification	
	None	
UL1	cULus ordinary location for Canada and USA	

012	Flow direction	
	Flow direction from left to right	
Z	Flow direction from right to left	

Type codes

001	Series	
MS	MS series	

002	Size	
6	Grid dimension 62 mm	

003	Function	
LFM	Fine and micro filters	

004	Pneumatic connection	
1/4	Female thread G1/4	
3/8	Female thread G3/8	
1/2	Female thread G1/2	
AGB	Sub-base G1/4	
AGC	Sub-base G3/8	
AGD	Sub-base G1/2	
AGE	Sub-base G3/4	
AGF	Sub-base G1	
AQN	Sub-base 1/4 NPT	
AQP	Sub-base 3/8 NPT	
AQR	Sub-base 1/2 NPT	
AQS	Sub-base 3/4 NPT	

005	Filter design	
A	0.01 µm	
B	1 µm	

006	Bowl type	
R	Plastic tray with plastic basket	
U	Aluminium	

007	Condensate drain	
E2	External fully automatic condensate drain, electric, 110 V AC, connection terminals	
E3	External fully automatic condensate drain, electric, 230 V AC, connection terminals	
E4	External fully automatic condensate drain, electric, 24 V DC, connection terminals	
H	Semi-automatic	
M	Manual	
V	Fully automatic, normally open	
VC	Fully automatic, normally closed	

008	Flow rate	
	Standard	
HF	High flow rate	

009	Range of applications	
	None	
HP	Suitable for sealing air and purge air	

010	Filter change sensing	
	None	
DA	Differential pressure display, visual	
DN	Filter contamination indicator, M8 plug, NPN, 3-pin	
DNI	Filter contamination indicator, M12 plug, NPN, 4-pin, analogue output 4...20 mA	
DP	Filter contamination indicator, M8 plug, PNP, 3-pin	
DPI	Filter contamination indicator, M12 plug, PNP, 4-pin, analogue output 4...20 mA	

011	Type of mounting	
	Without mounting bracket	
WP	Mounting bracket basic design	
WPM	Mounting bracket for hooking in service unit components	
WB	Mounting centrally at rear (wall mounting top and bottom), connecting plates not required	

012	EU certification	
	None	
EX4	II 2GD	

013	UL certification	
	None	
UL1	cULus ordinary location for Canada and USA	

014	Flow direction	
	Flow direction from left to right	
Z	Flow direction from right to left	

Datasheet

Function
Condensate drain
Manual, rotating
Without differential pressure display

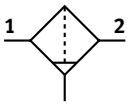

With differential pressure display or filter contamination indicator

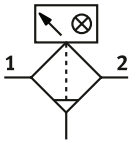

Condensate drain
Semi- or fully automatic
Without differential pressure display

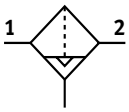

With differential pressure display or filter contamination indicator

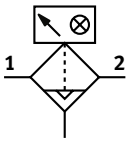

Flow rate
54 ... 3000 l/min

Temperature range
–10 ... +60 °C

Operating pressure
0 ... 20 bar

www.festo.com

- High-efficiency filter for exceptionally clean compressed air
- Air quality to ISO 8573-1:2010
- Available with manual, semi-automatic, fully automatic, or fully automatic, electrically actuated condensate drain
- Available with differential pressure indicator for indicating filter contamination
- Available with electronic filter pollution indicator
- Available with filter cartridge for low flow rates, suitable for sealing air and purge air applications
- Optional device variant EX4 for use in potentially explosive areas in zones 1, 2, 21 and 22
- Choice of filter inserts 0.01 µm or 1 µm
- New filter cartriges → Page 93

General technical data		
Size	MS4	MS6
Pneumatic connection 1, 2		
Female thread	G1/8 or G1/4	G1/4, G3/8 or G1/2
Connecting plate AG...	G1/8, G1/4 or G3/8	G1/4, G3/8, G1/2, G3/4 or G1
Connecting plate AQ...	1/8 NPT, 1/4 NPT or 3/8 NPT	1/4 NPT, 3/8 NPT, 1/2 NPT or 3/4 NPT
Design	Fibre filter	
Type of mounting	With accessories	
	In-line installation	
Mounting position	Vertical ±5°	
Grade of filtration [µm]	0.01 (micro filter MS-LFM-A)	
	1 (fine filter MS-LFM-B)	
Air purity class at the output	Compressed air to ISO 8573-1:2010 [3:4:2] (grade of filtration 0.01 µm, micro filter MS-LFM-A)	
	Compressed air to ISO 8573-1:2010 [5:4:3] (grade of filtration 1 µm, fine filter MS-LFM-B)	
Bowl guard	Plastic bowl guard	
	Integrated as metal bowl	
Condensate drain	Manual, rotating	
	Manual, non-detenting	
	Semi-automatic	
	Fully automatic	
	–	Fully automatic, electrically actuated
Differential pressure display1)	Visual indicator	
	With filter contamination indicator based on differential pressure	

1) Recommended max. differential pressure for replacing the filter cartridge is Δp1-2 = 0.35 bar, with micro filter MS6-LFM-A with operating range HP Δp1-2 = 0.5 bar.

Note: This product conforms to ISO 1179-1 and ISO 228-1.

Datasheet

General technical data			
Size		MS4	MS6
Residual oil content	[mg/m³]	š0.01 (micro filter MS-LFM-A) š0.5 (fine filter MS-LFM-A)	
Max. condensate volume	[ml]	19 (with plastic bowl guard) 25 (with metal bowl)	38
Filter efficiency, fine particles [1]	[%]	99.995 (micro filter MS-LFM-A) 99 (fine filter MS-LFM-B)	
Filter efficiency, oil aerosol [1]	[%]	99 (micro filter MS-LFM-A) 90 (fine filter MS-LFM-B)	
MPPS	[µm]	0.05 (micro filter MS-LFM-A)	
Filter efficiency MPPS	[%]	99.95 (micro filter MS-LFM-A)	

1) It is recommended to pre-filter the compressed air for the MS-LFM-A ultrafine filter with an MS-LFM-B fine filter (filter fineness 1 µm).
This results in a total separation efficiency of 99.99995% for fine particles and 99.9% for oil aerosol.

Standard flow rate qn1) [l/min]				
Size	MS4	MS6		
Variants	Standard	Standard	High flow rate HF	Application area HP, suitable for sealing air and purge air
Micro filter MS-LFM-A				
Max. standard flow rate for air purity class $q_{n\,max}$	360	900	2500	400
Min. standard flow rate for air purity class qn min	54	135	150	60
Fine filter MS-LFM-B				
Max. standard flow rate for air purity class $q_{n\,max}$	360	950	3000	500
Min. standard flow rate for air purity class qn min	54	140	188	60

1) Measured at p1 = 6 bar.
A flow of 125 l/min is required to ensure trouble-free closing of the fully automatic condensate drain.

Operating and environmental conditions							
Condensate drain	Manual, rotating		Semi-automatic		Fully automatic		Fully automatic, electrically actuated
	M		H		V		E2, E3, E4
Size	MS4	MS6	MS4	MS6	MS4	MS6	MS6
Operating pressure [bar]	0 ... 14 (0 ... 10)[1]	0 ... 20 (0 ... 10)[1]	1.5 ... 12 (1.5 ... 10)[1]	1.5 ... 12 (1.5 ... 10)[1]	2 ... 12 (2 ... 10)[1]	2 ... 12 (2 ... 10)[1]	0.8 ... 16 (0.8 ... 10)[1]
Operating medium	Compressed air to ISO 8573-1:2010 [6:4:4]2)						
	Inert gases						
Ambient temperature [°C]	–10 ... +60 (0 ... +50)[3]		–10 ... +60 (+5 ... +50)[3]		–10 ... +60 (+5 ... +50)[3]		+1 ... +60 (+1 ... +50)[3]
Temperature of medium [°C]	–10 ... +60 (0 ... +50)[3]		–10 ... +60 (+5 ... +50)[3]		–10 ... +60 (+5 ... +50)[3]		+1 ... +60 (+1 ... +50)[3]
Storage temperature [°C]	–10 ... +60 (0 ... +50)[3]		–10 ... +60 (0 ... +50)[3]		–10 ... +60 (0 ... +50)[3]		+1 ... +60 (+1 ... +50)[3]
Corrosion resistance class CRC[4]	2						
Food-safe5)	See supplementary material information						–
UL certification5)	c UL us - Recognized (OL)						

1) Value in brackets applies to MS4/MS6-LFM with UL certification or with filter contamination indicator DP/DN/DPI/DNI.
2) It is recommended to pre-filter the compressed air for the MS-LFM-A ultrafine filter with an MS-LFM-B fine filter (filter fineness 1 µm).
This results in a total separation efficiency of 99.99995% for fine particles and 99.9% for oil aerosol.
3) Value in brackets applies to MS4/MS6-LFM with filter contamination indicator DP/DN/DPI/DNI.
4) More information: www.festo.com/x/topic/crc
5) More information www.festo.com/catalogue/ms-lfm ➔ Support/Downloads..

Datasheet

Technical data – Filter pollution indicator					
Filter contamination indicator		DP	DN	DPI	DNI
Pressure measuring range	[bar]	0 ... +1			
Measured variable		Differential pressure; percentage value for filter contamination			
Switching output		PNP	NPN	PNP	NPN
Analogue output	[mA]	–		4 ... 20	
Operating voltage range	[V DC]	15 ... 30			
Max. output current	[mA]	150			
Degree of protection		IP65			
CE marking (see declaration of conformity)		To EU EMC Directive			
		To EU Low Voltage Directive			

ATEX	
EU certification	EX4
ATEX category for gas	II 2G
Type of (ignition) protection for gas	Ex h IIC T6 Gb X
ATEX category for dust	II 2D
Type of ignition protection for dust	Ex h IIIC T60°C Db X
Explosion-proof ambient temperature	–10 °C ≤ Ta ≤ +60 °C
Explosion protection certification outside the EU	EPL Db (GB) EPL Gb (GB)
CE marking (see declaration of conformity)[1]	To EU Explosion Protection Directive (ATEX)
UKCA marking (see declaration of conformity)[1]	To UK explosion regulations

1) More information www.festo.com/catalogue/ms-lfm ➔ Support/Downloads..

Weight [g]			
Size	MS4	MS6	
Variants	Standard	Standard/range of application HP	High flow rate HF
Fine and micro filters with plastic bowl guard R	190	600	1280
Fine and micro filters with metal bowl U	350	820	1500
Fine and micro filters with metal bowl U and electrically actuated, fully automatic condensate drain E2, E3, E4	–	1800	2180
Filter contamination indicator	80	100	100

Materials

Sectional view

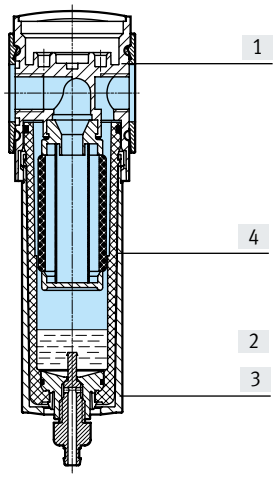

Fine and micro filter		
[1]	Housing	Die-cast aluminium
[2]	Plastic bowl guard	PC
[3]	Metal bowl	Wrought aluminium alloy, Die-cast aluminium
	Inspection window	PA
[4]	Filter	Borosilicate fibre
–	Seals	NBR
Note on materials		RoHs-compliant
LABS (PWIS) conformity		VDMA24364-B1/B2-L

Filter contamination indicator	
Housing	PA, POM
Adapter	PA
Display	PC
Seals	NBR
LABS (PWIS) conformity	VDMA24364-B1/B2-L

Datasheet

Standard flow rate qn as a function of differential pressure Δp1–2

Grade of filtration 0.01 µm

Grade of filtration 1 µm

MS4-LFM-1/8 and MS4-LFM-1/4

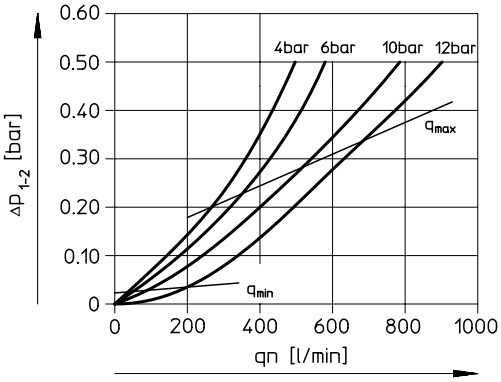

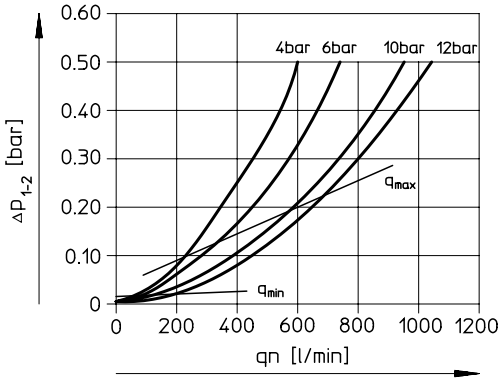

MS6-LFM-1/4

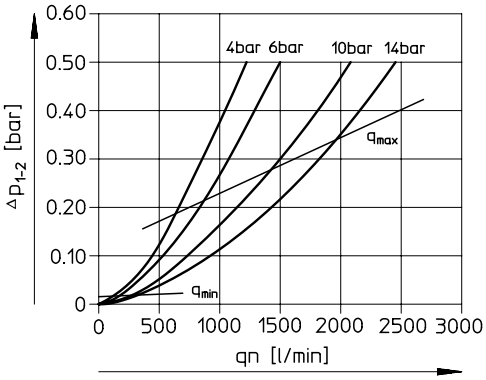

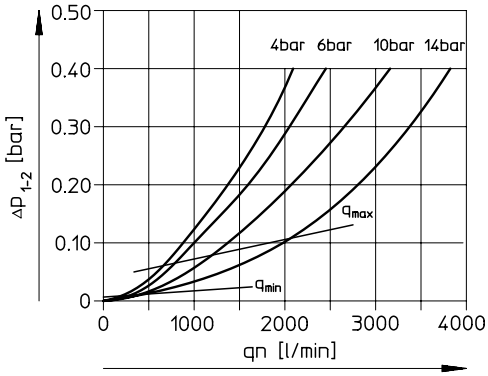

MS6-LFM-3/8

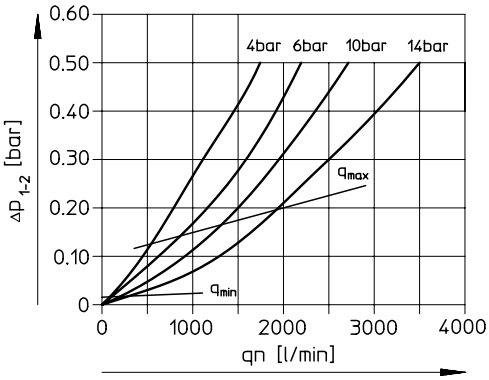

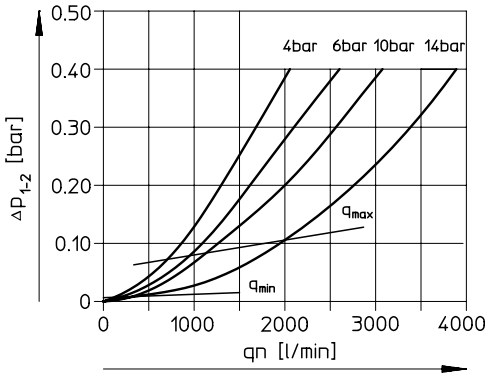

MS6-LFM-1/2

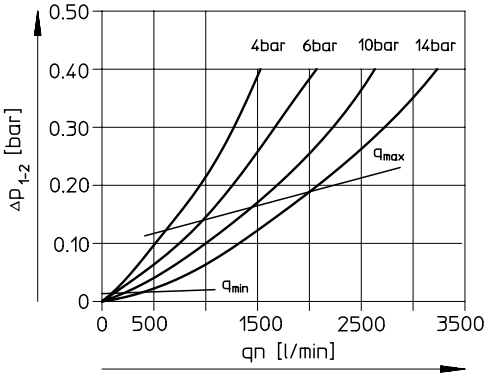

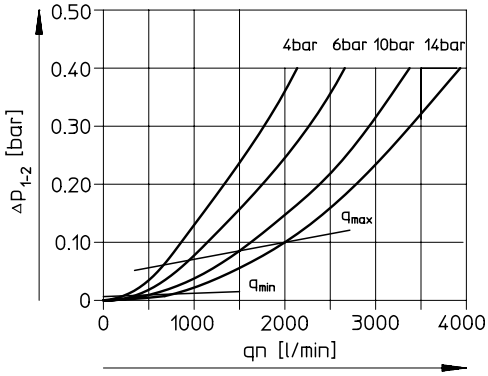

Datasheet

Standard flow rate qn as a function of differential pressure p1-2

MS6-LFM-1/4-...-HF, grade of filtration 0.01 µm

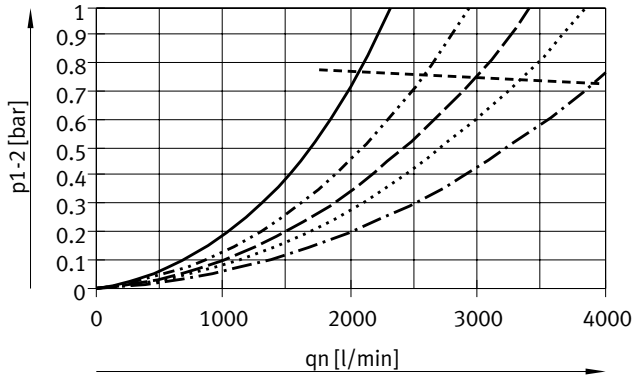

MS6-LFM-1/4-...-HF, grade of filtration 1 µm

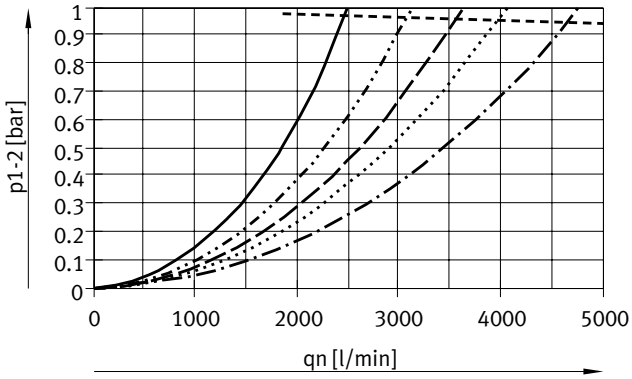

MS6-LFM-3/8-...-HF, grade of filtration 0.01 µm

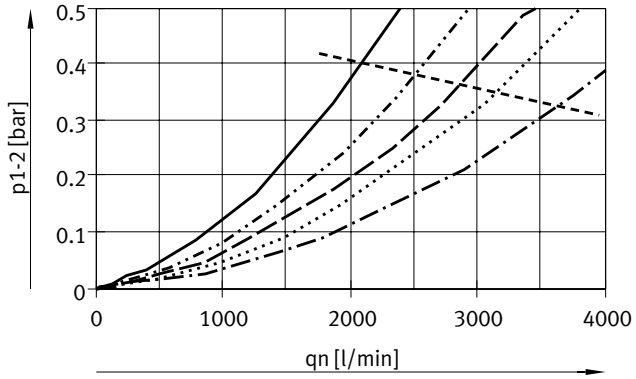

MS6-LFM-3/8-...-HF, grade of filtration 1 µm

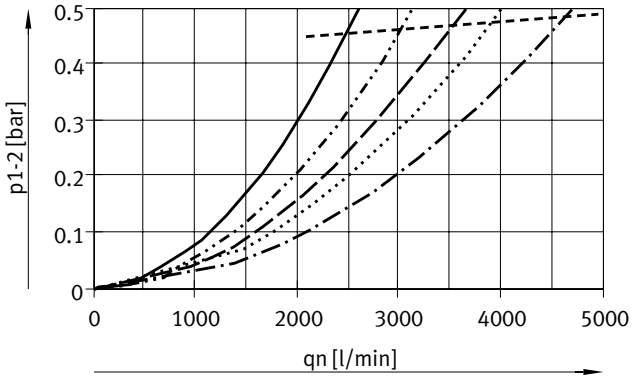

MS6-LFM-1/2-...-HF, grade of filtration 0.01 µm

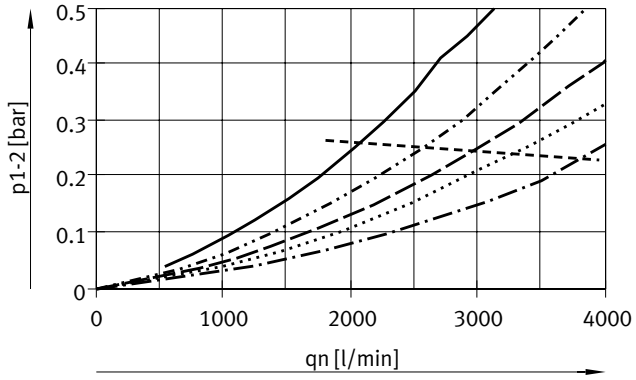

MS6-LFM-1/2-...-HF, grade of filtration 1 µm

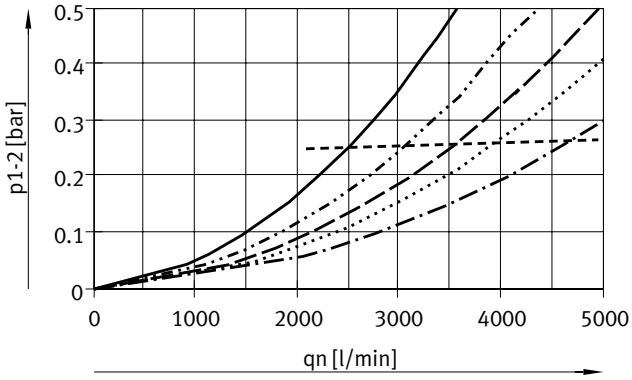

- p 1: 4 bar (q_{min}: 103 l/min)
- p 1: 6 bar (q_{min}: 125 l/min)
- p1: 8 bar
- p 1: 10 bar (q_{min}: 162 l/min)
- p 1: 14 bar (q_{min}: 192 l/min)
- q_{max}

- p 1: 4 bar (q_{min}: 124 l/min)
- p 1: 6 bar (q_{min}: 150 l/min)
- p1: 8 bar
- p 1: 10 bar (q_{min}: 194 l/min)
- p 1: 14 bar (q_{min}: 230 l/min)
- q_{max}

Datasheet

Dimensions – Basic version MS4-LFM Download CAD data ➔ www.festo.com

Manual, rotary condensate drain

With plastic bowl guard R

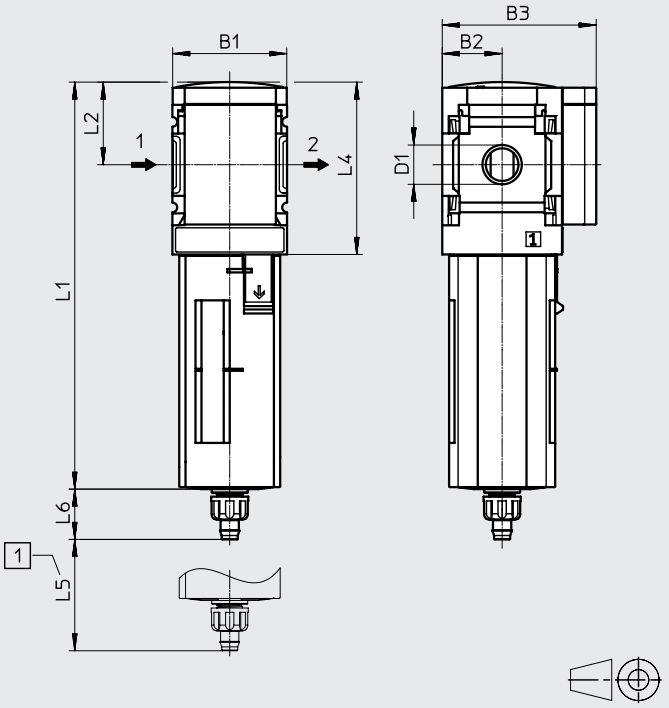

[1] Installation dimension ➔ Flow direction

With metal bowl U

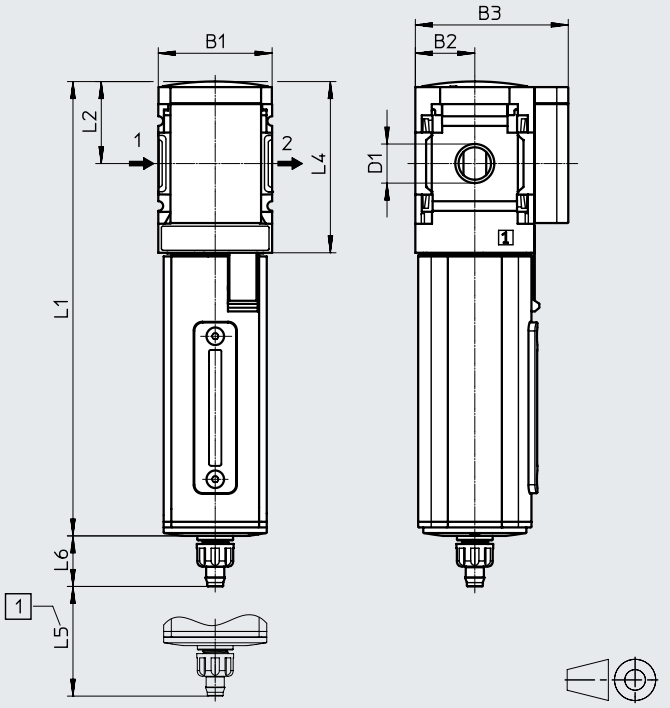

[1] Installation dimension ➔ Flow direction

Type	B1	B2	B3	D1	L1		L2	L4	L5	L6
					Plastic bowl guard	Metal bowl				
MS4-LFM-1/8	40	21	54	G1/8	141.6	160	29	60.5	≥ 60	17.7
MS4-LFM-1/4				G1/4						

Note: This product conforms to ISO 1179-1 and ISO 228-1.

Datasheet

Dimensions – Basic version MS6-LFM Download CAD data ➔ www.festo.com

Manual, rotary condensate drain

With plastic bowl guard R

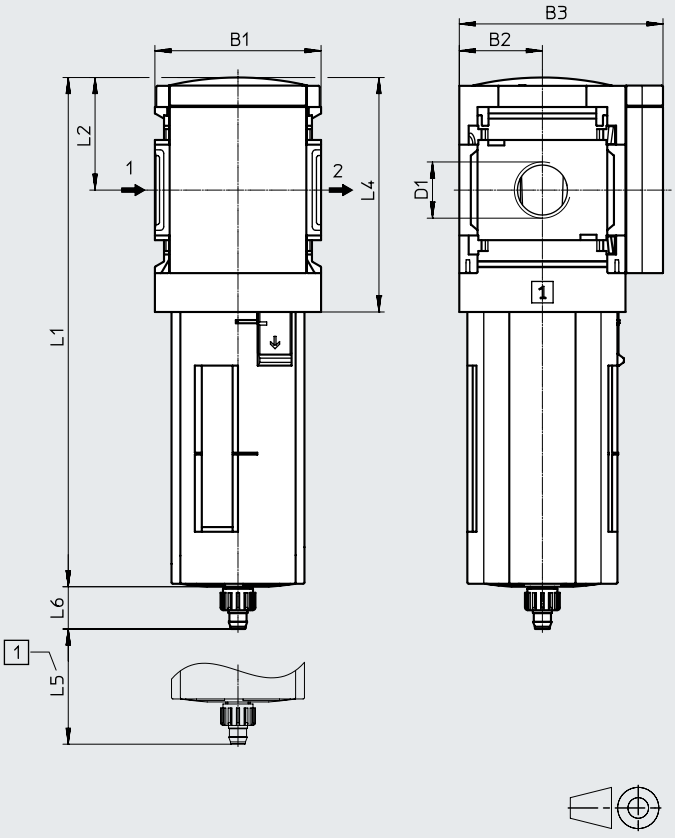

[1] Installation dimension ➔ Flow direction

With metal bowl U

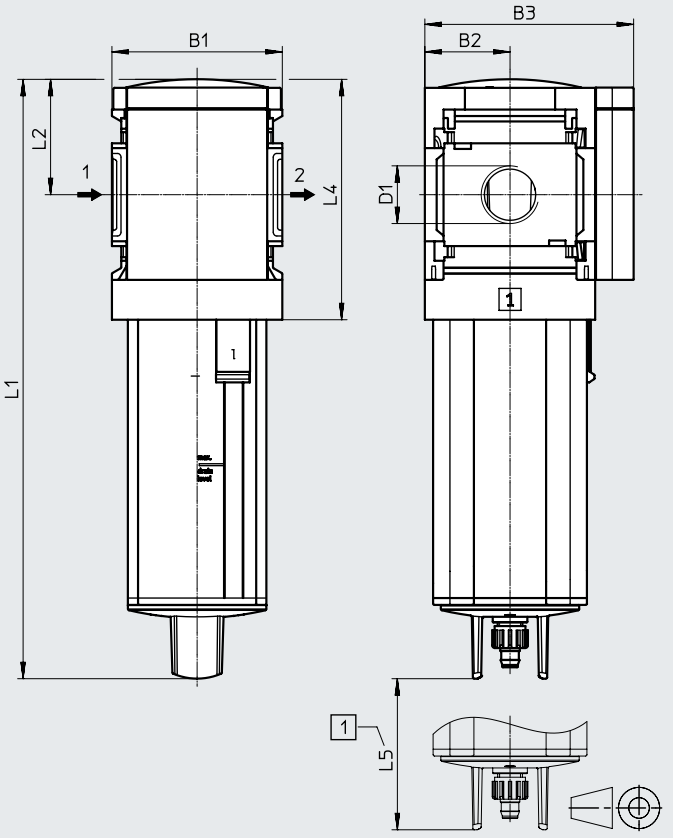

[1] Installation dimension ➔ Flow direction

Type	B1	B2	B3	D1	L1		L2	L4	L5	L6
					Plastic bowl guard	Metal bowl				
MS6-LFM-1/4	62	31	76	G1/4	193	221	42	88	≥ 80	15.8
MS6-LFM-3/8				G3/8						
MS6-LFM-1/2				G1/2						

Note: This product conforms to ISO 1179-1 and ISO 228-1.

Datasheet

Dimensions – High flow rate HF Download CAD data ➔ www.festo.com

Manual, rotary condensate drain

With plastic bowl guard R

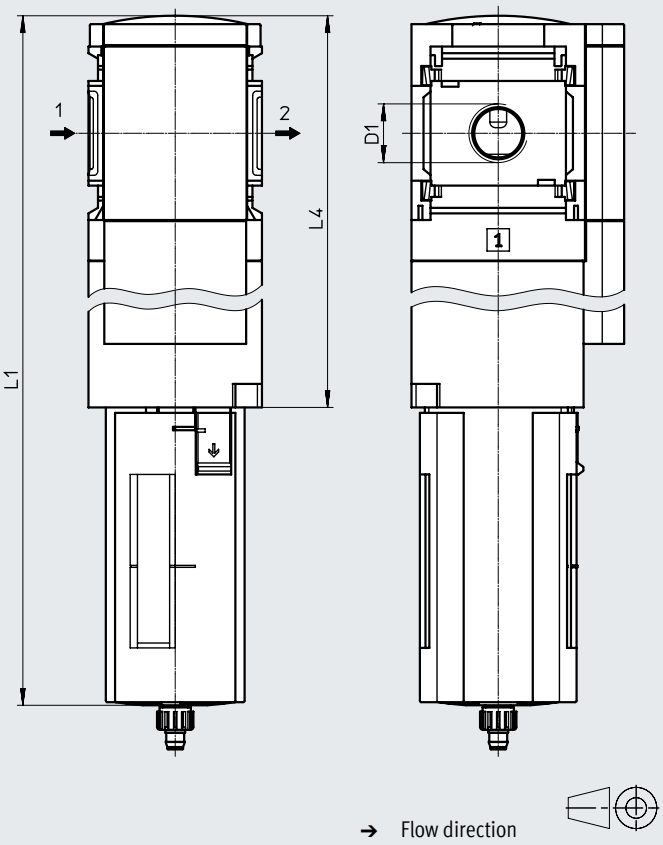

With metal bowl U

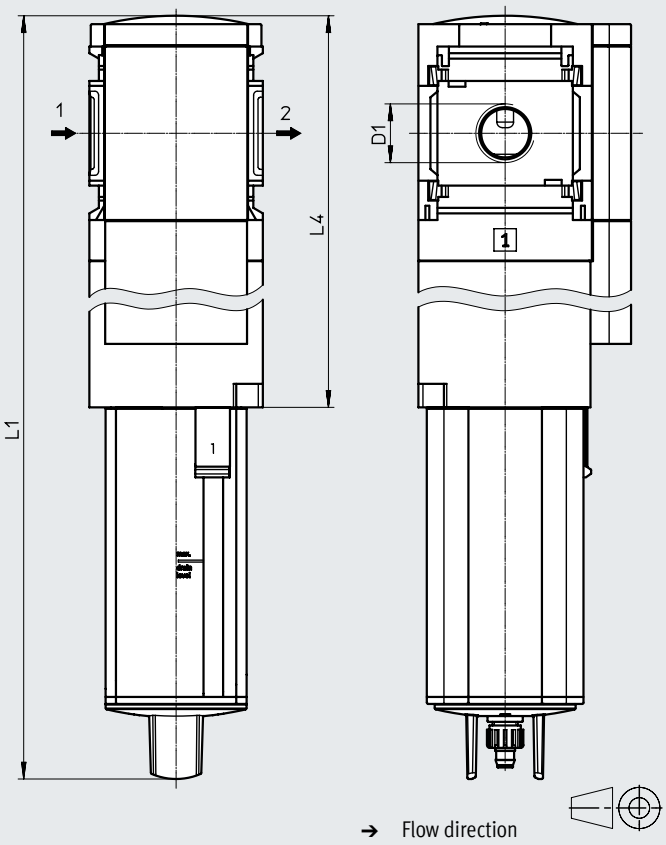

Type	D1	L1		L4
		Plastic bowl guard	Metal bowl	
MS6-LFM-1/4-...-HF	G1/4	313	340	207
MS6-LFM-3/8-...-HF	G3/8			
MS6-LFM-1/2-...-HF	G1/2			

Note: This product conforms to ISO 1179-1 and ISO 228-1.

Datasheet

Dimensions – Differential pressure display DA

Download CAD data ➔ www.festo.com

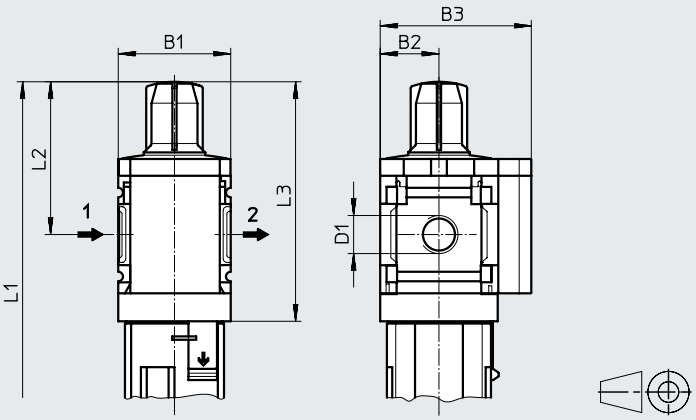

➔ Flow direction

Type	B1	B2	B3	D1	L1		L2	L3
					Plastic bowl guard	Metal bowl		
MS4-LFM-1/8-...-DA	40	21	54	G1/8	168.4	186.8	55.8	87.3
MS4-LFM-1/4-...-DA				G1/4				
MS6-LFM-1/4-...-DA	62	31	76	G1/4	229	257	78	124
MS6-LFM-3/8-...-DA				G3/8				
MS6-LFM-1/2-...-DA				G1/2				
MS6-LFM-1/4-...-HF-DA	62	31	76	G1/4	349	376	78	124
MS6-LFM-3/8-...-HF-DA				G3/8				
MS6-LFM-1/2-...-HF-DA				G1/2				

Note: This product conforms to ISO 1179-1 and ISO 228-1.

Datasheet

Dimensions – Filter contamination indicator DP, DN, DPI, DNI

Download CAD data ➔ www.festo.com

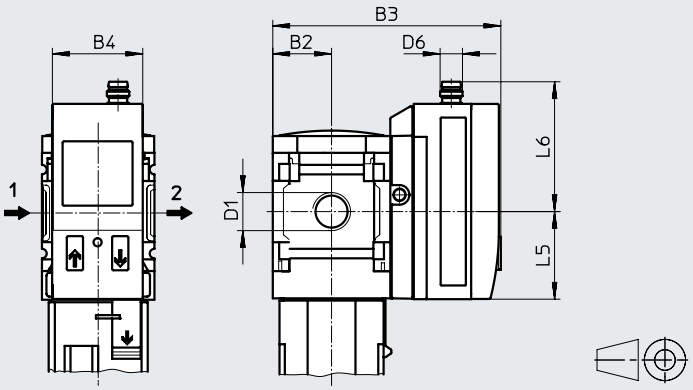

➔ Flow direction

Variant DP:
Filter contamination indicator with 3-pin M8x1 plug, 1 switching output PNP

Variant DN:
Filter contamination indicator with 3-pin M8x1 plug, 1 switching output NPN

Variant DPI:
Filter contamination indicator with 4-pin M12x1 plug, 1 switching output PNP and 4 ... 20 mA analogue

Variant DNI:
Filter contamination indicator with 4-pin M12x1 plug, 1 switching output NPN and 4 ... 20 mA analogue

Type	B2	B3	B4	D1	D6	L5	L6
MS4-LFM-1/8-...-DP/DN	21	82.6	32.3	G1/8	M8x1	35.1	46.7
MS4-LFM-1/4-...-DP/DN				G1/4			
MS4-LFM-1/8-...-DPI/DNI	21	82.6	32.3	G1/8	M12x1	35.1	55.8
MS4-LFM-1/4-...-DPI/DNI				G1/4			
MS6-LFM-1/4-...-DP/DN	31	103	32.3	G1/4	M8x1	35.1	46.7
MS6-LFM-3/8-...-DP/DN				G3/8			
MS6-LFM-1/2-...-DP/DN				G1/2			
MS6-LFM-1/4-...-DPI/DNI	31	103	32.3	G1/4	M12x1	35.1	55.8
MS6-LFM-3/8-...-DPI/DNI				G3/8			
MS6-LFM-1/2-...-DPI/DNI				G1/2			

Note: This product conforms to ISO 1179-1 and ISO 228-1.

Datasheet

Dimensions – Condensate drain

Download CAD data ➔ www.festo.com

[M] Manual, rotating

MS4-...-R/U-M
MS6-...-R-M

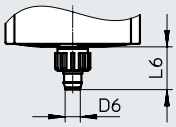

MS6-...-U-M

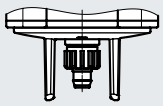

Barbed connector for plastic tubing PUN(-H)-8x1.25

[H] Semi-automatic

MS4-...-R/U-H
MS6-...-R-H

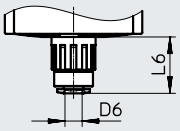

MS6-...-U-H

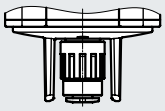

Push-in connector for plastic tubing PUN-6/PAN-6

[V] Fully automatic

MS4-...-U-V
MS6-...-R-V

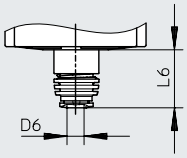

MS6-...-U-V

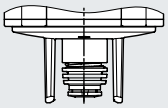

Push-in connector for plastic tubing PUN-6/PAN-6

Type	D6 ⌀	L6
Plastic bowl guard R		
MS4-LFM-...-M	5.6	17.7
MS6-LFM-...-M		15.8
Metal bowl U		
MS4-LFM-...-M	5.6	17.7
MS6-LFM-...-M		–

Type	D6 ⌀	L6
Plastic bowl guard R		
MS4-LFM-...-H	6.2	22.1
MS6-LFM-...-H		20.4
Metal bowl U		
MS4-LFM-...-H	6.2	22.1
MS6-LFM-...-H		–

Type	D6 ⌀	L6
Plastic bowl guard R		
–	–	–
MS6-LFM-...-V	6.2	18.5
Metal bowl U		
MS4-LFM-...-V	6.2	20.4
MS6-LFM-...-V		–

[E2], [E3], [E4] Fully automatic, electrically actuated

Datasheets ➔ Internet: pwea

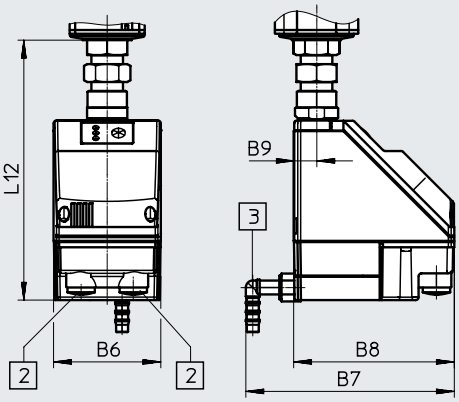

Condensate drain PWEA:
[2] Electrical connection: screw terminal PG9
[3] Connection can be rotated 360° for plastic tubing PUN-H-12x2

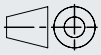

Type	B6	B7	B8	B9	L12
MS6-LF-...-E2, E3, E4	72	140	108	15	174.5

Datasheet

Ordering data
Plastic guard, without differential pressure display

Size	Condensate drain	Connection	Micro filter Grade of filtration 0.01 µm		Fine filters Grade of filtration 1 µm	
			Part no.	Type	Part no.	Type
Flow direction from left to right						
MS4	Manual, rotating	G1/8	**529463**	**MS4-LFM-1/8-ARM**	**529465**	**MS4-LFM-1/8-BRM**
		G1/4	**529459**	**MS4-LFM-1/4-ARM**	**529461**	**MS4-LFM-1/4-BRM**
MS6	Manual, rotating	G1/4	**529663**	**MS6-LFM-1/4-ARM**	**529667**	**MS6-LFM-1/4-BRM**
		G3/8	**529671**	**MS6-LFM-3/8-ARM**	**529675**	**MS6-LFM-3/8-BRM**
		G1/2	**529655**	**MS6-LFM-1/2-ARM**	**529659**	**MS6-LFM-1/2-BRM**
	Fully automatic	G1/4	**530510**	**MS6-LFM-1/4-ARV**	**530514**	**MS6-LFM-1/4-BRV**
		G3/8	**530518**	**MS6-LFM-3/8-ARV**	**–**	**–**
		G1/2	**530502**	**MS6-LFM-1/2-ARV**	**530506**	**MS6-LFM-1/2-BRV**
Flow direction from right to left						
MS4	Manual, rotating	G1/4	**529460**	**MS4-LFM-1/4-ARM-Z**	**–**	**–**
MS6	Fully automatic	G1/2	**–**	**–**	**530508**	**MS6-LFM-1/2-BRV-Z**

Ordering data
Plastic guard, with differential pressure display

Size	Condensate drain	Connection	Micro filter Grade of filtration 0.01 µm		Fine filters Grade of filtration 1 µm	
			Part no.	Type	Part no.	Type
Flow direction from left to right						
MS4	Manual, rotating	G1/8	**536821**	**MS4-LFM-1/8-ARM-DA**	**–**	**–**
		G1/4	**536822**	**MS4-LFM-1/4-ARM-DA**	**536818**	**MS4-LFM-1/4-BRM-DA**
MS6	Manual, rotating	G1/4	**536869**	**MS6-LFM-1/4-ARM-DA**	**536833**	**MS6-LFM-1/4-BRM-DA**
		G3/8	**536870**	**MS6-LFM-3/8-ARM-DA**	**–**	**–**
		G1/2	**536871**	**MS6-LFM-1/2-ARM-DA**	**536835**	**MS6-LFM-1/2-BRM-DA**
	Fully automatic	G1/2	**536877**	**MS6-LFM-1/2-ARV-DA**	**536841**	**MS6-LFM-1/2-BRV-DA**

Ordering data
Integrated as metal bowl, without differential pressure display

Size	Condensate drain	Connection	Micro filter Grade of filtration 0.01 µm		Fine filters Grade of filtration 1 µm	
			Part no.	Type	Part no.	Type
Flow direction from left to right						
MS4	Fully automatic	G1/4	**535768**	**MS4-LFM-1/4-AUV**	**535766**	**MS4-LFM-1/4-BUV**
MS6	Fully automatic	G1/4	**529665**	**MS6-LFM-1/4-AUV**	**–**	**–**
		G3/8	**529673**	**MS6-LFM-3/8-AUV**	**–**	**–**
		G1/2	**529657**	**MS6-LFM-1/2-AUV**	**529661**	**MS6-LFM-1/2-BUV**
Flow direction from right to left						
MS6	Fully automatic	G1/2	**529658**	**MS6-LFM-1/2-AUV-Z**	**529662**	**MS6-LFM-1/2-BUV-Z**

Ordering data
Integrated as metal bowl, with differential pressure display

Size	Condensate drain	Connection	Micro filter Grade of filtration 0.01 µm		Fine filters Grade of filtration 1 µm	
			Part no.	Type	Part no.	Type
Flow direction from left to right						
MS4	Fully automatic	G1/4	**537214**	**MS4-LFM-1/4-AUV-DA**	**–**	**–**
MS6	Fully automatic	G1/2	**536883**	**MS6-LFM-1/2-AUV-DA**	**536847**	**MS6-LFM-1/2-BUV-DA**
Flow direction from left to right, high flow rate						
MS6	Fully automatic	G1/2	**552926**	**MS6-LFM-1/2-AUV-HF-DA**	**552925**	**MS6-LFM-1/2-BUV-HF-DA**
Flow direction from right to left						
MS6	Fully automatic	G1/4	**537216**	**MS6-LFM-1/4-AUV-DA-Z**	**–**	**–**

Ordering data – Modular product system

Ordering table						
Grid dimension [mm]	40	62	Conditions	Code		Enter code
Module no.	**527697**	**527670**				
Series	Standard			**MS**		MS
Size	4	6		**...**		
Function	Fine and micro filter			**-LFM**		-LFM
Pneumatic connection	Female thread G1/8	–	[1]	**-1/8**		
	Female thread G1/4	Female thread G1/4	[1]	**-1/4**		
	–	Female thread G3/8	[1]	**-3/8**		
	–	Female thread G1/2	[1]	**-1/2**		
	Connecting plate G1/8	–		**-AGA**		
	Connecting plate G1/4	Connecting plate G1/4		**-AGB**		
	Connecting plate G3/8	Connecting plate G3/8		**-AGC**		
	–	Connecting plate G1/2		**-AGD**		
	–	Connecting plate G3/4		**-AGE**		
	–	Connecting plate G1		**-AGF**		
	Connecting plate 1/8 NPT	–	[1]	**-AQK**		
	Connecting plate 1/4 NPT	Connecting plate 1/4 NPT	[1]	**-AQN**		
	Connecting plate 3/8 NPT	Connecting plate 3/8 NPT	[1]	**-AQP**		
	–	Connecting plate 1/2 NPT	[1]	**-AQR**		
	–	Connecting plate 3/4 NPT	[1]	**-AQS**		
Grade of filtration	1 µm			**-B**		
	0.01 µm			**-A**		
Bowl	Plastic bowl with plastic bowl guard			**-R**		
	Metal bowl			**-U**		

[1] 1/8, 1/4, 3/8, 1/2, AQK, AQN, AQP, AQR, AQS, E2, E3, E4, DP, DN, DPI, DNI, WPM
Not with EU EX4 certification

Ordering data – Modular product system

Ordering table

Grid dimension [mm]	40	62	Conditions	Code		Enter code
Condensate drain	Manual			**-M**		
	Semi-automatic (P1 max. 12 bar)			**-H**		
	Fully automatic (P1 max. 12 bar) open without pressure		[2]	**-V**		
	Fully automatic (P1 max. 12 bar) closed without pressure		[2]	**-VC**		
	–	External fully automatic condensate drain, electric, 115 V AC, connection terminals	[1] [3]	**-E2**		
	–	External fully automatic condensate drain, electric, 230 V AC, connection terminals	[1] [3]	**-E3**		
	–	External fully automatic condensate drain, electric, 24 V DC, connection terminals	[1] [3]	**-E4**		
Flow rate	–	High flow rate		**-HF**		
Range of applications	–	Suitable for sealing air and purge air	[4]	**-HP**		
Filter change sensing	Differential pressure display, visual			**-DA**		
	Filter contamination indicator, M8 plug, PNP, 3-pin		[1] [5]	**-DP**		
	Filter contamination indicator, M8 plug, NPN, 3-pin		[1] [5]	**-DN**		
	Filter contamination indicator, M12 plug, PNP, 4-pin, analogue output 4 ... 20 mA		[1] [5]	**-DPI**		
	Filter contamination indicator, M12 plug, NPN, 4-pin, analogue output 4 ... 20 mA		[1] [5]	**-DNI**		
Type of mounting	Mounting bracket standard design		[6]	**-WP**		
	Mounting bracket for hooking in service unit components		[1] [6]	**-WPM**		
	Mounting bracket centrally at the rear (wall mounting top and bottom), connecting plates not required			**-WB**		
	Mounting bracket centrally at the rear (wall mounting top), connecting plates not required	–		**-WBM**		
EU certification	II 2GD to EU Explosion Protection Directive (ATEX)			**-EX4**		
UL certification	cULus, ordinary location for Canada and USA			**-UL1**		
Flow direction	Flow direction from right to left			**-Z**		

[1] 1/8, 1/4, 3/8, 1/2, AQK, AQN, AQP, AQR, AQS, E2, E3, E4, DP, DN, DPI, DNI, WPM
Not with EU EX4 certification
[2] V, VC — Size 4: only with metal bowl U
[3] E2, E3, E4 — Only with metal bowl U
[4] HP — Not with flow rate HF or filter change sensing DA
[5] DP, DN, DPI, DNI — Measuring range max. 10 bar
[6] WP, WPM — Only with connecting plate AGA, AGB, AGC, AGD, AGE, AQK, AQN, AQP, AQR or AQS

Type codes

001	Series	
MS	MS series	

002	Size	
4	Grid dimension 40 mm	

003	Function	
LFX	Activated carbon filter	

004	Pneumatic connection	
1/8	Female thread G1/8	
1/4	Female thread G1/4	
AGA	Sub-base G1/8	
AGB	Sub-base G1/4	
AGC	Sub-base G3/8	
AQK	Sub-base NPT1/8	
AQN	Sub-base NPT1/4	
AQP	Sub-base NPT3/8	

005	Bowl type	
R	Plastic tray with plastic basket	
U	Aluminium	

006	Type of mounting	
	Without mounting bracket	
WP	Mounting bracket basic design	
WPM	Mounting bracket for hooking in service unit components	
WB	Mounting centrally at rear (wall mounting top and bottom), connecting plates not required	
WBM	Mounting centrally at rear (wall mounting top), connecting plates not required	

007	EU certification	
	None	
EX4	II 2GD	

008	UL certification	
	None	
UL1	cULus ordinary location for Canada and USA	

009	Flow direction	
	Flow direction from left to right	
Z	Flow direction from right to left	

Type codes

001	Series	
MS	MS series	

002	Size	
6	Grid dimension 62 mm	

003	Function	
LFX	Activated carbon filter	

004	Pneumatic connection	
1/4	Female thread G1/4	
3/8	Female thread G3/8	
1/2	Female thread G1/2	
AGB	Sub-base G1/4	
AGC	Sub-base G3/8	
AGD	Sub-base G1/2	
AGE	Sub-base G3/4	
AGF	Sub-base G1	
AQN	Sub-base 1/4 NPT	
AQP	Sub-base 3/8 NPT	
AQR	Sub-base 1/2 NPT	
AQS	Sub-base 3/4 NPT	

005	Bowl type	
R	Plastic tray with plastic basket	
U	Aluminium	

006	Flow rate	
	Standard	
HF	High flow rate	

007	Range of applications	
	None	
HP	Suitable for sealing air and purge air	

008	Type of mounting	
	Without mounting bracket	
WB	Mounting centrally at rear (wall mounting top and bottom), connecting plates not required	
WP	Mounting bracket basic design	
WPM	Mounting bracket for hooking in service unit components	

009	EX certification EU	
	None	
EX4	II 2GD	

010	UL certification	
	None	
UL1	cULus ordinary location for Canada and USA	

011	Flow direction	
	Flow direction from left to right	
Z	Flow direction from right to left	

Datasheet

Function

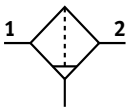

Flow rate
max. 2500 l/min

Temperature range
–10 ... +60 °C

Operating pressure
0 ... 20 bar

www.festo.com

Note

Prefiltration with micro filter MS-LFM-A (grade of filtration 0.01 µm) is recommended.

- Removes liquid and gaseous oil particles from compressed air using activated carbon
- Eliminates odours and vapours
- Available with filter cartridge for low flow rates, suitable for sealing air and purge air applications
- Optional device variant EX4 for use in potentially explosive areas in zones 1, 2, 21 and 22
- New filter cartridges → Page 93

General technical data		
Size	MS4	MS6
Pneumatic connection 1, 2		
Female thread	G1/8 or G1/4	G1/4, G3/8 or G1/2
Connecting plate AG...	G1/8, G1/4 or G3/8	G1/4, G3/8, G1/2, G3/4 or G1
Connecting plate AQ...	1/8 NPT, 1/4 NPT or 3/8 NPT	1/4 NPT, 3/8 NPT, 1/2 NPT or 3/4 NPT
Design	Activated carbon filter	
Type of mounting	With accessories	
	In-line installation	
Mounting position	Vertical ±5°	
Air purity class at the output1)	Compressed air to ISO 8573-1:2010 [3:4:1]	
Bowl guard	Plastic bowl guard	
	Integrated as metal bowl	
Residual oil content [mg/m³]	≤0.003	

1) It is recommended to replace the filter cartridge with a new cartridge after 1000 operating hours (applicable for ambient temperature of 21 °C). The service life of the filter cartridges is reduced at higher temperatures.

Note: This product conforms to ISO 1179-1 and ISO 228-1.

Standard flow rate qn1) [l/min]				
Size	MS4	MS6		
Variants	Standard	Standard	High flow rate HF	Application area HP, suitable for sealing air and purge air
Max. standard flow rate for air purity class $q_{n\,max}$	360	900	2500	900

1) Measured at p1 = 6 bar.

Datasheet

Operating and environmental conditions			
Size		MS4	MS6
Operating pressure	[bar]	0 ... 14 (0 ... 10)[1]	0 ... 20 (0 ... 10)[1]
Operating medium		Compressed air to ISO 8573-1:2010 [3:4:2]	
Ambient temperature	[°C]	–10 ... +60	
Temperature of medium	[°C]	+5 ... +30	
Storage temperature	[°C]	–10 ... +60	
Corrosion resistance class CRC[2]		2	
Food-safe3)		See supplementary material information	
UL certification3)		c UL us - Recognized (OL)	

1) Value in brackets applies to MS4/MS6-LFX with UL certification.
2) More information: www.festo.com/x/topic/crc
3) More information: www.festo.com/catalogue/ms-lfx d Support/Downloads.

ATEX	
EU certification	EX4
ATEX category for gas	II 2G
Type of (ignition) protection for gas	Ex h IIC T6 Gb X
ATEX category for dust	II 2D
Type of ignition protection for dust	Ex h IIIC T60°C Db X
Explosion-proof ambient temperature	–10 °C ≤ Ta ≤ +60 °C
Explosion protection certification outside the EU	EPL Db (GB) EPL Gb (GB)
CE marking (see declaration of conformity)[1]	To EU Explosion Protection Directive (ATEX)
UKCA marking (see declaration of conformity)[1]	To UK explosion regulations

1) More information: www.festo.com/catalogue/ms-lfx d Support/Downloads.

Weight [g]			
Size	MS4	MS6	
Variants	Standard	Standard/range of application HP	High flow rate HF
Activated carbon filter, plastic bowl with plastic bowl guard R	190	600	1280
Activated carbon filter with metal bowl guard U	350	820	1500

Materials

Sectional view

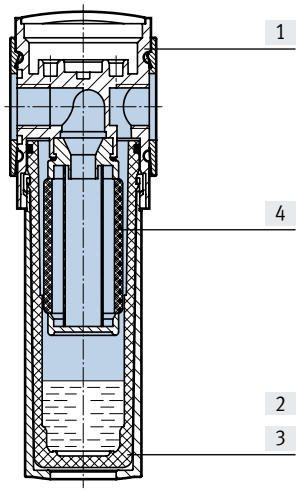

Activated carbon filter		
[1]	Housing	Die-cast aluminium
[2]	Plastic bowl guard	PC
[3]	Metal bowl	Wrought aluminium alloy, Die-cast aluminium
	Inspection window	PA
[4]	Filter	Activated carbon
–	Seals	NBR
Note on materials		RoHs-compliant
LABS (PWIS) conformity		VDMA24364-B1/B2-L

Datasheet

Standard flow rate qn as a function of differential pressure Δp1–2

MS4-LFX-1/8 and MS4-LFX-1/4

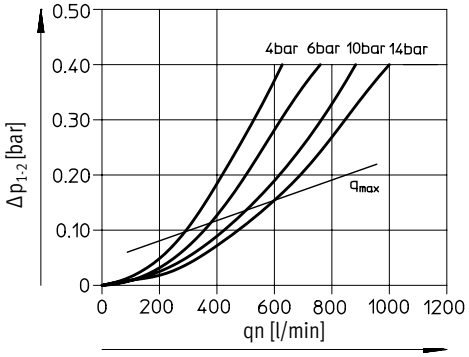

MS6-LFX-1/4

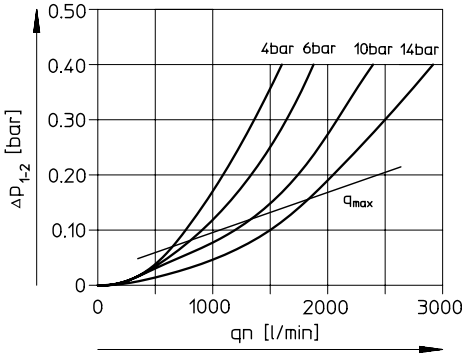

MS6-LFX-3/8

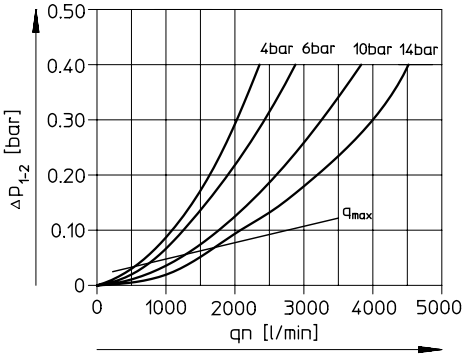

MS6-LFX-1/2

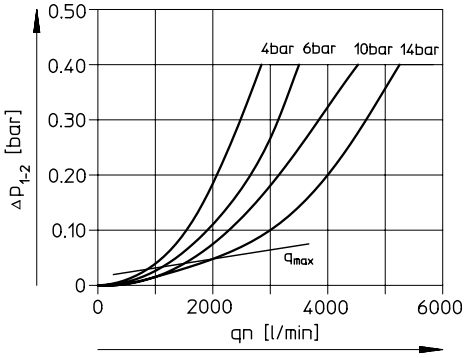

Standard flow rate qn as a function of differential pressure p1-2

MS6-LFX-1/4-...-HF

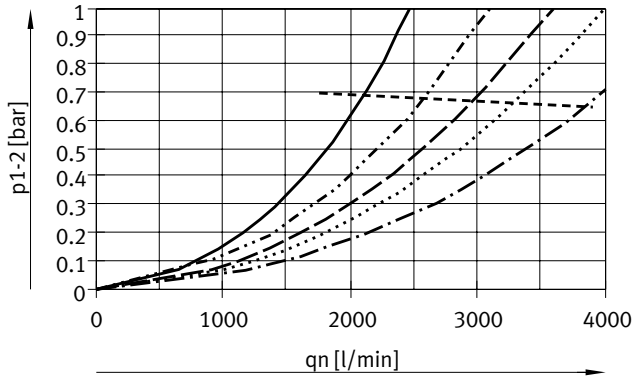

MS6-LFX-3/8-...-HF

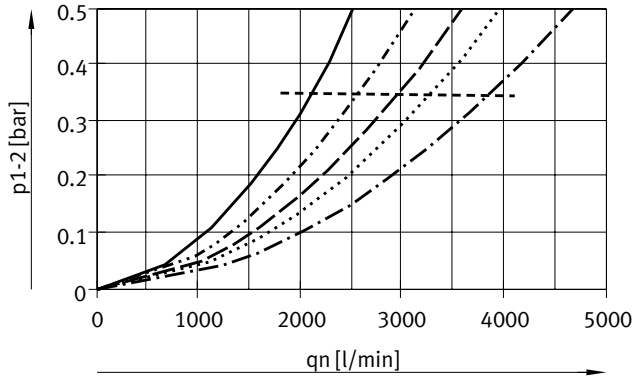

MS6-LFX-1/2-...-HF

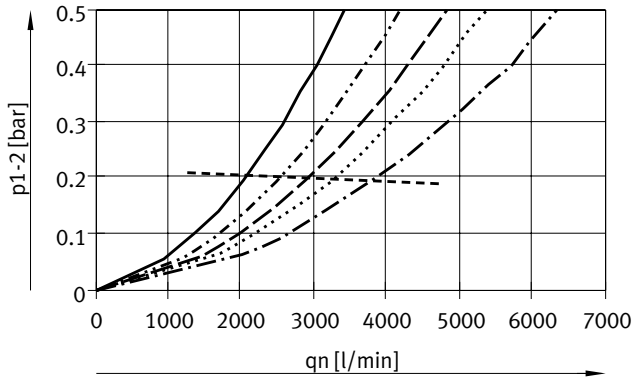

- p 1: 4 bar
- p 1: 6 bar
- p 1: 8 bar
- p 1: 10 bar
- p 1: 14 bar
- q_{max}

Datasheet

Dimensions – Basic version

Download CAD data ➔ www.festo.com

Standard/range of application HP

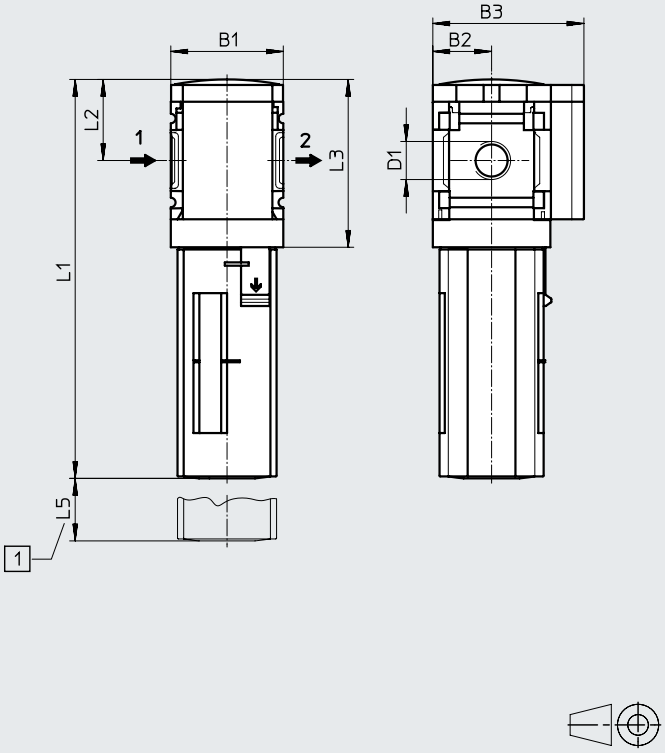

High flow rate HF

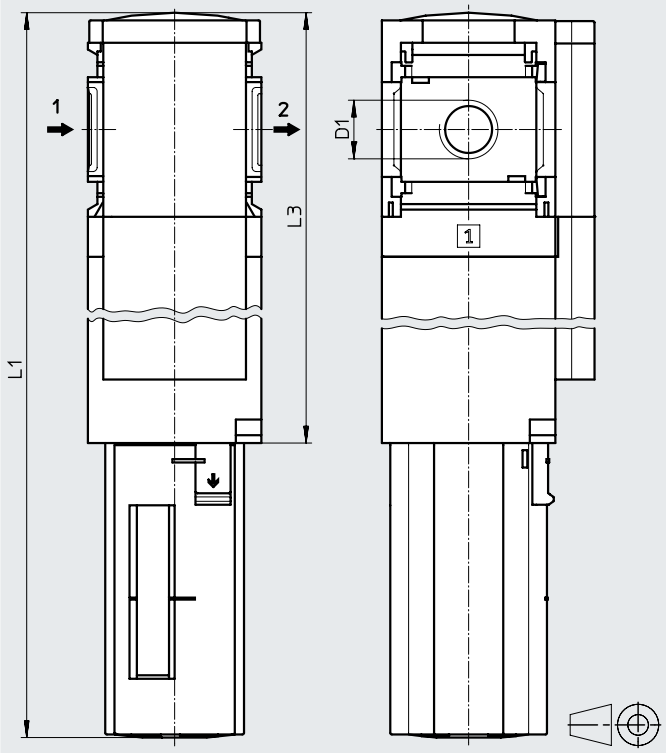

[1] Installation dimension ➔ Flow direction

➔ Flow direction

Type	B1	B2	B3	D1	L1 Bowl guard Polymer	L1 Bowl guard Metal	L2	L3	L5
MS4-LFX-1/8	40	21	54	G1/8	142.8	160.4	29	60	≥ 80
MS4-LFX-1/4				G1/4					
MS6-LFX-1/4	62	31	76	G1/4	192	198	42	88	≥ 100
MS6-LFX-3/8				G3/8					
MS6-LFX-1/2				G1/2					
MS6-LFX-1/4-...-HF	62	31	76	G1/4	312	318	42	207	≥ 100
MS6-LFX-3/8-...-HF				G3/8					
MS6-LFX-1/2-...-HF				G1/2					

Note: This product conforms to ISO 1179-1 and ISO 228-1.

Ordering data

Size	Connection	Plastic bowl guard Part no.	Plastic bowl guard Type	Integrated as metal bowl Part no.	Integrated as metal bowl Type
Flow direction from left to right					
MS4	G1/8	**–**	**–**	**536709**	**MS4-LFX-1/8-U**
	G1/4	**529467**	**MS4-LFX-1/4-R**	**535782**	**MS4-LFX-1/4-U**
MS6	G1/4	**529683**	**MS6-LFX-1/4-R**	**529685**	**MS6-LFX-1/4-U**
	G3/8	**529687**	**MS6-LFX-3/8-R**	**–**	**–**
	G1/2	**529679**	**MS6-LFX-1/2-R**	**529681**	**MS6-LFX-1/2-U**
Flow direction from left to right, high flow rate					
MS6	G1/2	**–**	**–**	**552927**	**MS6-LFX-1/2-U-HF**
Flow direction from right to left					
MS4	G1/4	**529468**	**MS4-LFX-1/4-R-Z**	**–**	**–**
MS6	G1/2	**529680**	**MS6-LFX-1/2-R-Z**	**–**	**–**

Ordering data – Modular product system

Ordering table					
Grid dimension [mm]	40	62	Conditions	Code	Enter code
Module no.	**527699**	**527672**			
Series	Standard			**MS**	MS
Size	4	6		**...**	
Function	Activated carbon filter			**-LFX**	-LFX
Pneumatic connection	Female thread G1/8	–	[1]	**-1/8**	
	Female thread G1/4	Female thread G1/4	[1]	**-1/4**	
	–	Female thread G3/8	[1]	**-3/8**	
	–	Female thread G1/2	[1]	**-1/2**	
	Connecting plate G1/8	–		**-AGA**	
	Connecting plate G1/4	Connecting plate G1/4		**-AGB**	
	Connecting plate G3/8	Connecting plate G3/8		**-AGC**	
	–	Connecting plate G1/2		**-AGD**	
	–	Connecting plate G3/4		**-AGE**	
	–	Connecting plate G1		**-AGF**	
	Connecting plate 1/8 NPT	–	[1]	**-AQK**	
	Connecting plate 1/4 NPT	Connecting plate 1/4 NPT	[1]	**-AQN**	
	Connecting plate 3/8 NPT	Connecting plate 3/8 NPT	[1]	**-AQP**	
	–	Connecting plate 1/2 NPT	[1]	**-AQR**	
	–	Connecting plate 3/4 NPT	[1]	**-AQS**	
Bowl	Plastic bowl with plastic bowl guard			**-R**	
	Metal bowl			**-U**	
Flow rate	–	High flow rate		**-HF**	
Range of applications	–	Suitable for sealing air and purge air	[2]	**-HP**	
Type of mounting	Mounting bracket standard design		[3]	**-WP**	
	Mounting bracket for hooking in service unit components		[1] [3]	**-WPM**	
	Mounting bracket centrally at the rear (wall mounting top and bottom), connecting plates not required			**-WB**	
	Mounting bracket centrally at the rear (wall mounting top), connecting plates not required	–		**-WBM**	
EU certification	II 2GD to EU Explosion Protection Directive (ATEX)			**-EX4**	
UL certification	cULus, ordinary location for Canada and USA			**-UL1**	
Flow direction	Flow direction from right to left			**-Z**	

[1] 1/8, 1/4, 3/8, 1/2, AQK, AQN, AQP, AQR, AQS, WPM
Not with EU EX4 certification
[2] HP Not with flow rate HF
[3] WP, WPM Only with connecting plate AGA, AGB, AGC, AGD, AGE, AQK, AQN, AQP, AQR or AQS

Peripherals overview

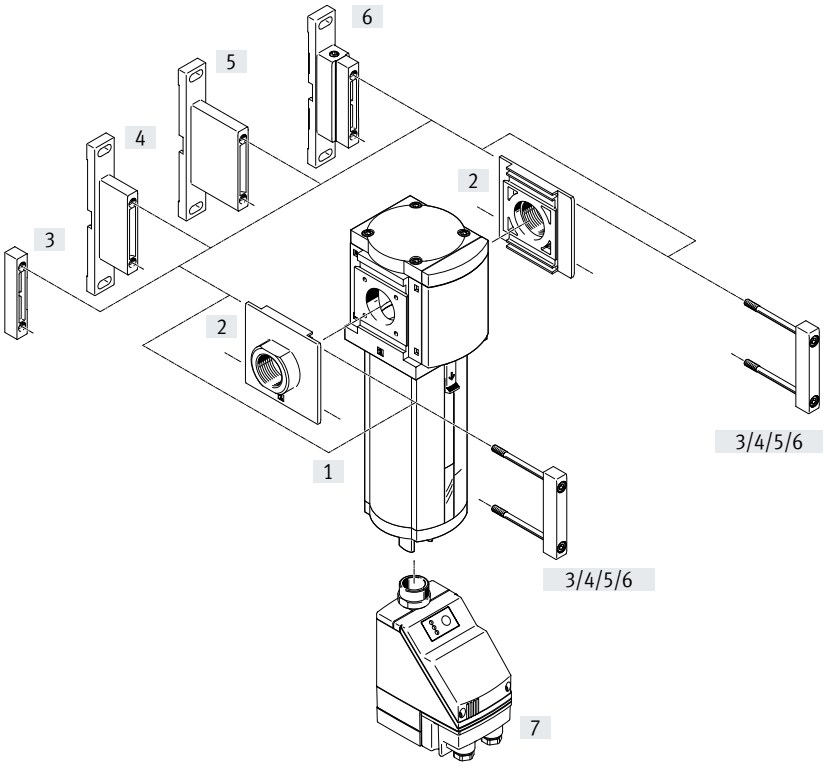

Note

Additional accessories:

- Module connector for combination with sizes MS6/MS9 or MS12
  ➔ internet: rmv, armv

Mounting attachments and accessories		Individual device			Combination	➔ Page/Internet
		With female thread 3/4, 1, N3/4, N1	With connecting plate AG.../AQ...		Module without connecting thread, without connecting plate G	
			Without EU EX4 certification	With EU EX4 certification		
[1]	Filter MS9-LF	■	■	■	■	45
[2]	Connecting plate SET MS9-AG...	–	■	■	■	ms9-ag
	Connecting plate SET MS9-AQ...	–	■	–	■	ms9-aq
[3]	Module connector MS9-MV	–	–	–	■	ms9-mv
[4]	Mounting bracket MS9-WP	■	■	■	■	ms9-wp
[5]	Mounting bracket MS9-WPB	■	■	■	■	ms9-wp
[6]	Mounting bracket MS9-WPM	■	■	–	■	ms9-wp
[7]	Fully automatic condensate drain, electrically actuated E2, E3, E4	■	■	–	■	49

Type codes

001	Series	
MS	MS series	

002	Size	
9	Grid dimension 90 mm	

003	Function	
LF	Filter	

004	Pneumatic connection	
3/4	Female thread G3/4	
1	Female thread G1	
AGD	Sub-base G1/2	
AGE	Sub-base G3/4	
AGF	Sub-base G1	
AGG	Connecting plate G1 1/4	
AGH	Connecting plate G1 1/2	
N3/4	Female thread 3/4 NPT	
N1	Female thread 1 NPT	
AQR	Sub-base 1/2 NPT	
AQS	Sub-base 3/4 NPT	
AQT	Sub-base 1 NPT	
AQU	Sub-base 1 1/4 NPT	
AQV	Sub-base 1 1/2 NPT	
G	Module without connecting thread, without sub-base	

005	Filter design	
C	5 µm	
E	40 µm	

006	Bowl type	
U	Aluminium	

007	Condensate drain	
E2	External fully automatic condensate drain, electric, 110 V AC, connection terminals	
E3	External fully automatic condensate drain, electric, 230 V AC, connection terminals	
E4	External fully automatic condensate drain, electric, 24 V DC, connection terminals	
H	Semi-automatic	
M	Manual	
V	Fully automatic, normally open	
VC	Fully automatic, normally closed	

008	Type of mounting	
	Without mounting bracket	
WP	Mounting bracket basic design	
WPB	Mounting bracket for large wall gap	
WPM	Mounting bracket for hooking in service unit components	

009	UL certification	
	None	
UL1	cULus ordinary location for Canada and USA	

010	Flow direction	
	Flow direction from left to right	
Z	Flow direction from right to left	

Additional variants can be ordered using the modular product system → Page 50

- Pneumatic connection
- Condensate drain
- Type of mounting
- EU certification
- UL certification
- Flow direction

Datasheet

Function
Condensate drain
Manual, rotating

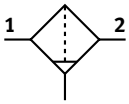

Condensate drain
Semi- or fully automatic

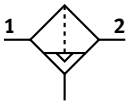

Flow rate
6000 ... 16000 l/min

Temperature range
–10 ... +60 °C

Operating pressure
0 ... 20 bar

www.festo.com

- Good particle and condensate separation
- High flow rate with minimal pressure drop
- Available with manual, semi-automatic, fully automatic, or fully automatic, electrically actuated condensate drain
- Choice of filter inserts 5 µm or 40 µm
- New filter cartridges ➔ Page 94
- Optional device variant EX4 for use in potentially explosive areas in zones 1, 2, 21 and 22

General technical data		
Size		MS9
Pneumatic connection 1, 2		
	Female thread	G3/4, G1, 3/4 NPT or 1 NPT
	Connecting plate AG...	G1/2, G3/4, G1, G1 1/4 or G1 1/2
	Connecting plate AQ...	1/2 NPT, 3/4 NPT, 1 NPT, 1 1/4 NPT or 1 1/2 NPT
	Module without connecting thread/connecting plate G	–
Design		Sintered filter with centrifugal separator
Type of mounting		With accessories
		In-line installation
Mounting position		Vertical ±5°
Grade of filtration	[µm]	5
		40
Air purity class at the output		Compressed air to ISO 8573-1:2010 [6:8:4] (grade of filtration 5 µm)
		Compressed air to ISO 8573-1:2010 [7:8:4] (grade of filtration 40 µm)
Bowl guard		Integrated as metal bowl
Condensate drain		Manual, rotating
		Semi-automatic
		Fully automatic
		Fully automatic, electrically actuated
Max. condensate volume	[ml]	220

Note: This product conforms to ISO 1179-1 and ISO 228-1.

Standard nominal flow rate qnN1) [l/min]				
Pneumatic connection		G1/2, 1/2 NPT	G3/4, 3/4 NPT	G1, G1 1/4, G1 1/2/ 1 NPT, 1 1/4 NPT, 1 1/2 NPT
Grade of filtration	5 µm	6000	8500	9500
	40 µm	8000	12500	16000

1) Measured at p1 = 6 bar and Δp = 1 bar

A flow of 125 l/min is required to ensure trouble-free closing of the fully automatic condensate drain.

Datasheet

Operating and environmental conditions					
Condensate drain		Manual, rotating M	Semi-automatic H	Fully automatic V	Fully automatic, electrically actuated E2, E3, E4
Operating pressure	[bar]	0 ... 20	1.5 ... 12	2 ... 12	1 ... 16
Operating medium		Compressed air to ISO 8573-1:2010 [–:9:–]	Compressed air to ISO 8573-1:2010 [–:9:–]	Compressed air to ISO 8573-1:2010 [7:9:–]	Compressed air to ISO 8573-1:2010 [–:9:–]
		Inert gases			
Ambient temperature	[°C]	–10 ... +60	–10 ... +60	–10 ... +60	+1 ... +60
Temperature of medium	[°C]	–10 ... +60	–10 ... +60	–10 ... +60	+1 ... +60
Storage temperature	[°C]	–10 ... +60	–10 ... +60	–10 ... +60	+1 ... +60
Corrosion resistance class CRC[1)]		2			
UL certification2)		c UL us - Recognized (OL)			

1) More information: www.festo.com/x/topic/crc
2) More information www.festo.com/catalogue/ms9-lf ➔ Support/Downloads..

ATEX	
EU certification	EX4
ATEX category for gas	II 2G
Type of (ignition) protection for gas	Ex h IIC T6 Gb X
ATEX category for dust	II 2D
Type of ignition protection for dust	Ex h IIIC T60°C Db X
Explosion-proof ambient temperature	–10 °C ≤ Ta ≤ +60 °C
Explosion protection certification outside the EU	EPL Db (GB) EPL Gb (GB)
CE marking (see declaration of conformity)[1)]	To EU Explosion Protection Directive (ATEX)
UKCA marking (see declaration of conformity)[1)]	To UK explosion regulations

1) More information www.festo.com/catalogue/ms9-lf ➔ Support/Downloads..

Weight [g]	
Filter	2000
Filter with electrically actuated, fully automatic condensate drain E2, E3, E4	2400

Materials

Sectional view

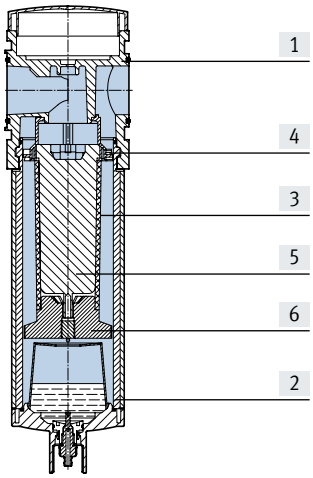

Filter		
[1]	Housing	Die-cast aluminium
[2]	Bowl	Wrought aluminium alloy
	Inspection window	PA
[3]	Filter	PE
[4]	Spin disc	POM
[5]	Filter support	POM
[6]	Separating disc	POM
–	Covering	Reinforced PA
–	Connecting plate, module connector, mounting bracket	Die-cast aluminium
–	Seals	NBR
Note on materials		RoHs-compliant
LABS (PWIS) conformity		VDMA24364-B1/B2-L

Datasheet

Standard flow rate qn as a function of differential pressure Δp1–2

Grade of filtration 5 µm, pneumatic connection G1, 1 NPT

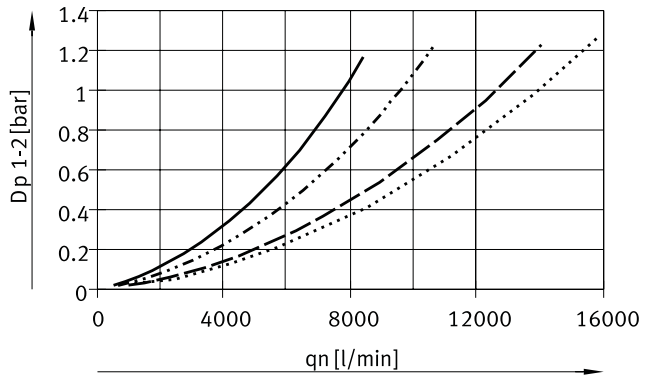

4 bar
10 bar
6 bar
12 bar

Grade of filtration 40 µm, pneumatic connection G1, 1 NPT

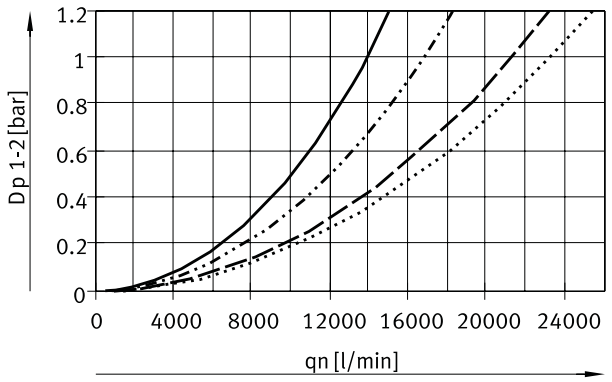

4 bar
10 bar
6 bar
12 bar

Dimensions – Basic version

Download CAD data ➔ www.festo.com

Module without connecting thread, without connecting plate G

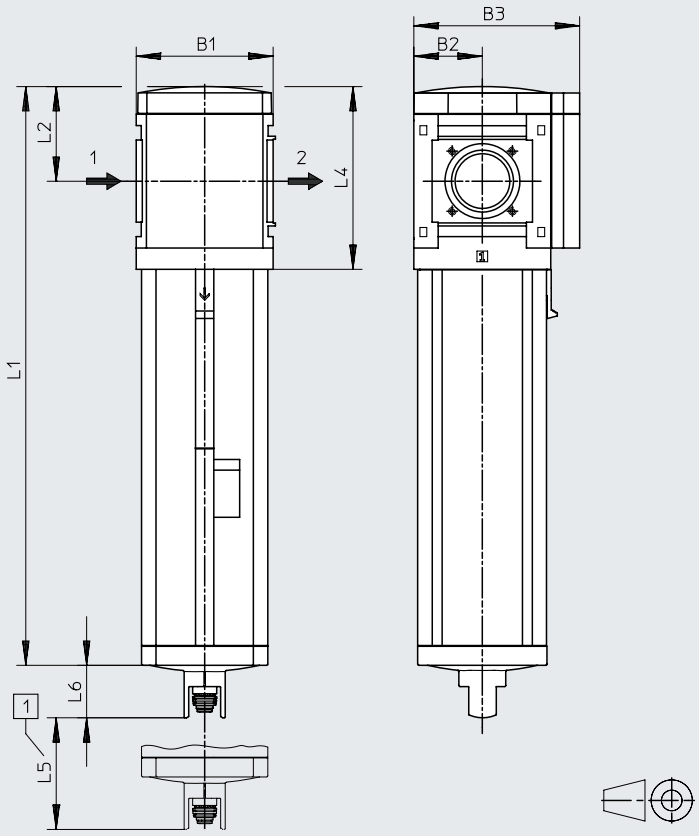

[1] Installation dimension

➔ Flow direction

Type	B1	B2	B3	L1	L2	L4	L5	L6
MS9-LF-G	90	45	109	310.5	62	120	≥ 160	34.5

Datasheet

Dimensions – Connecting thread/connecting plate

Download CAD data ➔ www.festo.com

With female thread 3/4, 1, N3/4, N1

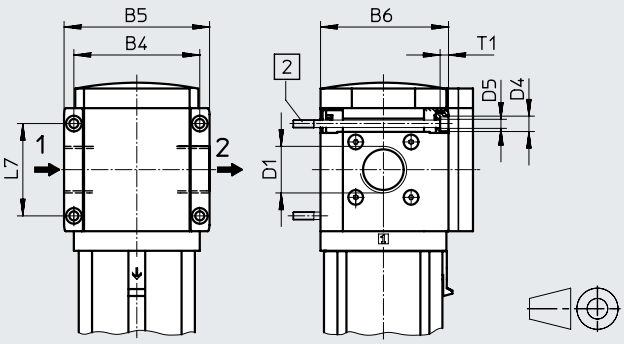

With connecting plate AG.../AQ...

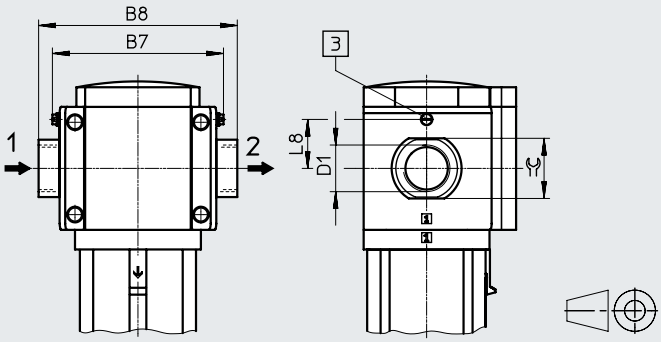

[2] Retaining screw M6xmin. 90 to DIN 912 (not included in the scope of delivery) for wall mounting without mounting bracket

[3] Earthing screw M4x8 (only with MS9-...-EX4)

➔ Flow direction

Type	B4	B5	B6	B7	B7 EX4	B8	D1	D4	D5	L7	L8 EX4	T1	⌀
MS9-LF-3/4	90	104	91.5	–	–	–	G3/4	11	6.5	66	–	6	–
MS9-LF-1							G1						
MS9-LF-AGD	–	–	–	112	122	132	G1/2	–	–	–	35	–	30
MS9-LF-AGE						132	G3/4						36
MS9-LF-AGF						142	G1						41
MS9-LF-AGG						162	G1 1/4						50
MS9-LF-AGH						176	G1 1/2						55
MS9-LF-N3/4	90	104	91.5	–	–	–	3/4 NPT	11	6.5	66	–	6	–
MS9-LF-N1							1 NPT						
MS9-LF-AQR	–	–	–	112	122	132	1/2 NPT	–	–	–	35	–	30
MS9-LF-AQS						132	3/4 NPT						36
MS9-LF-AQT						142	1 NPT						41
MS9-LF-AQU						162	1/4 NPT						50
MS9-LF-AQV						176	1/2 NPT						55

Note: This product conforms to ISO 1179-1 and ISO 228-1.

Datasheet

Dimensions – Condensate drain

Download CAD data ➔ www.festo.com

[M] Manual, rotating

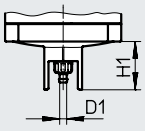

Barbed connector for plastic tubing
PUN(-H)-8x1.25

[H] Semi-automatic/[V] Fully automatic

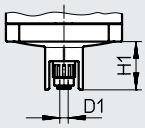

Push-in connector for plastic tubing
PUN-6/PAN-6

[E2], [E3], [E4] Fully automatic, electrically actuated

Datasheets ➔ Internet: pwea

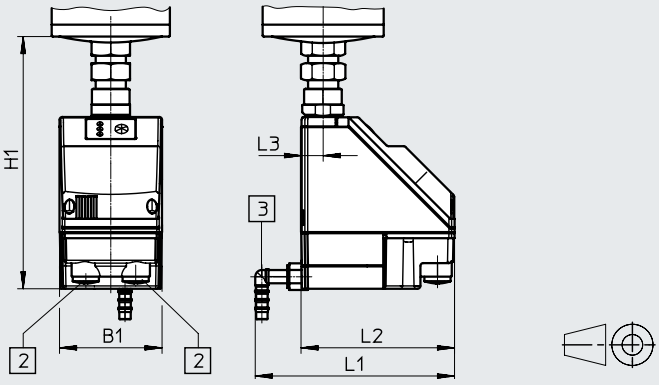

Condensate drain PWEA:
[2] Electrical connection: screw terminal PG9
[3] Connection can be rotated 360° for plastic tubing PUN-H-12x2

Type	B1	D1	H1	L1	L2	L3
MS9-LF-...-M	–	5.6	34.5	–	–	–
MS9-LF-...-H/V		6.2				
MS9-LF-...-E2, E3, E4	72	–	178	140	108	15

Ordering data

Size	Condensate drain	Connection	Grade of filtration 5 µm		Grade of filtration 40 µm	
			Part no.	Type	Part no.	Type
MS9	Manual, rotating	–	**564108**	**MS9-LF-G-CUM**	**564106**	**MS9-LF-G-EUM**
	Fully automatic	–	**564109**	**MS9-LF-G-CUV**	**564107**	**MS9-LF-G-EUV**

Ordering data – Modular product system

Ordering table Grid dimension [mm]	90	Conditions	Code		Enter code
Module no.	**562532**				
Series	Standard		**MS**		MS
Size	9		**9**		9
Function	Filter		**-LF**		-LF
Pneumatic connection	Female thread G3/4	[1]	**-3/4**		
	Female thread G1	[1]	**-1**		
	Connecting plate G1/2		**-AGD**		
	Connecting plate G3/4		**-AGE**		
	Connecting plate G1		**-AGF**		
	Connecting plate G1 1/4		**-AGG**		
	Connecting plate G1 1/2		**-AGH**		
	Female thread 3/4 NPT	[1]	**-N3/4**		
	Female thread 1 NPT	[1]	**-N1**		
	Connecting plate 1/2 NPT	[1]	**-AQR**		
	Connecting plate 3/4 NPT	[1]	**-AQS**		
	Connecting plate 1 NPT	[1]	**-AQT**		
	Connecting plate 1 1/4 NPT	[1]	**-AQU**		
	Connecting plate 1 1/2 NPT	[1]	**-AQV**		
	Module without connecting thread, without connecting plate	[1]	**-G**		
Grade of filtration	40 µm		**-E**		
	5 µm		**-C**		
Bowl	Metal bowl		**-U**		-U
Condensate drain	Manual		**-M**		
	Semi-automatic (P1 max. 12 bar)		**-H**		
	Fully automatic (P1 max. 12 bar) open without pressure		**-V**		
	Fully automatic (P1 max. 12 bar) closed without pressure		**-VC**		
External, fully automatic, electric	115 V AC, connection terminals (P1 max. 16 bar)	[1]	**-E2**		
	230 V AC, connection terminals (P1 max. 16 bar)	[1]	**-E3**		
	24 V DC, connection terminals (P1 max. 16 bar)	[1]	**-E4**		
Type of mounting	Mounting bracket standard design	[2]	**-WP**		
	Mounting bracket for hooking in service unit components	[1] [2]	**-WPM**		
	Mounting bracket for large wall gap	[2]	**-WPB**		
EU certification	II 2GD to EU Explosion Protection Directive (ATEX)		**-EX4**		
UL certification	cULus, ordinary location for Canada and USA		**-UL1**		
Flow direction	Flow direction from right to left		**-Z**		

[1] 3/4, 1, N3/4, N1, AQR, AQS, AQT, AQU, AQV, G, E2, E3, E4, WPM
Not with EU EX4 certification

[2] WP, WPM, WPB Not with pneumatic connection G

Peripherals overview

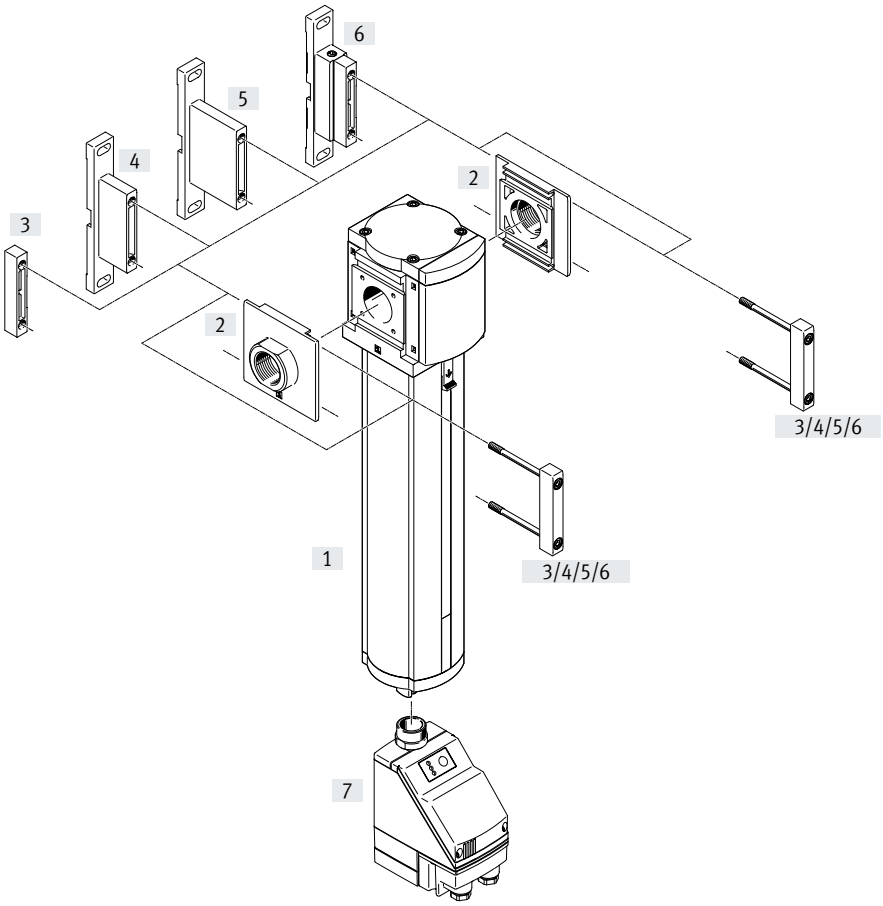

Note

Additional accessories:

- Module connector for combination with sizes MS6/MS9 or MS12
  ➔ internet: rmv, armv

Mounting attachments and accessories		Individual device			Combination	➔ Page/Internet
		With female thread 3/4, 1, N3/4, N1	With connecting plate AG.../AQ...		Module without connecting thread, without connecting plate G	
			Without EU EX4 certification	With EU EX4 certification		
[1]	Fine and micro filter MS9-LFM	■	■	■	■	53
[2]	Connecting plate SET MS9-AG...	–	■	■	■	ms9-ag
	Connecting plate SET MS9-AQ...	–	■	–	■	ms9-aq
[3]	Module connector MS9-MV	–	–	–	■	ms9-mv
[4]	Mounting bracket MS9-WP	■	■	■	■	ms9-wp
[5]	Mounting bracket MS9-WPB	■	■	■	■	ms9-wp
[6]	Mounting bracket MS9-WPM	■	■	–	■	ms9-wp
[7]	Fully automatic condensate drain, electrically actuated E2, E3, E4	■	■	–	■	61

Type codes

001	Series	
MS	MS series	

002	Size	
9	Grid dimension 90 mm	

003	Function	
LFM	Fine and micro filters	

004	Pneumatic connection	
3/4	Female thread G3/4	
1	Female thread G1	
AGD	Sub-base G1/2	
AGE	Sub-base G3/4	
AGF	Sub-base G1	
AGG	Connecting plate G1 1/4	
AGH	Connecting plate G1 1/2	
AQR	Sub-base 1/2 NPT	
AQS	Sub-base 3/4 NPT	
AQT	Sub-base 1 NPT	
AQU	Sub-base 1 1/4 NPT	
AQV	Sub-base 1 1/2 NPT	
G	Module without connecting thread, without sub-base	
N3/4	Female thread 3/4 NPT	
N1	Female thread 1 NPT	

005	Filter design	
A	0.01 µm	
B	1 µm	

006	Bowl type	
U	Aluminium	

007	Condensate drain	
E2	External fully automatic condensate drain, electric, 110 V AC, connection terminals	
E3	External fully automatic condensate drain, electric, 230 V AC, connection terminals	
E4	External fully automatic condensate drain, electric, 24 V DC, connection terminals	
H	Semi-automatic	
M	Manual	
V	Fully automatic, normally open	
VC	Fully automatic, normally closed	

008	Flow rate	
	Standard	
HF	High flow rate	

009	Filter change sensing	
	None	
DA	Differential pressure display, visual	

010	Type of mounting	
	Without mounting bracket	
WP	Mounting bracket basic design	
WPB	Mounting bracket for large wall gap	
WPM	Mounting bracket for hooking in service unit components	

011	EX certification EU	
	None	
EX4	II 2GD	

012	UL certification	
	None	
UL1	cULus ordinary location for Canada and USA	

013	Flow direction	
	Flow direction from left to right	
Z	Flow direction from right to left	

Additional variants can be ordered using the modular product system → Page 63

- Pneumatic connection
- Condensate drain
- Type of mounting
- EU certification
- UL certification
- Flow direction

Datasheet

Function
Condensate drain
Manual, rotating
Without differential pressure display

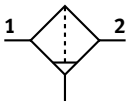

With differential pressure display

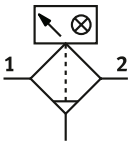

Condensate drain
Semi- or fully automatic
Without differential pressure display

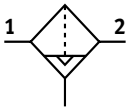

With differential pressure display

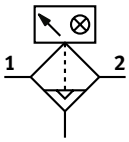

Flow rate
325 ... 10000 l/min

Temperature range
–10 ... +60 °C

Operating pressure
0 ... 20 bar

- High-efficiency filter for exceptionally clean compressed air
- Air quality to ISO 8573-1:2010
- Available with manual, semi-automatic, fully automatic, or fully automatic, electrically actuated condensate drain
- Available with differential pressure indicator for indicating filter contamination
- Choice of filter inserts 0.01 µm or 1 µm
- New filter cartridges ➔ Page 94
- Optional device variant EX4 for use in potentially explosive areas in zones 1, 2, 21 and 22

General technical data	
Size	MS9
Pneumatic connection 1, 2	
Female thread	G3/4, G1, 3/4 NPT or 1 NPT
Connecting plate AG...	G1/2, G3/4, G1, G1 1/4 or G1 1/2
Connecting plate AQ...	1/2 NPT, 3/4 NPT, 1 NPT, 1 1/4 NPT or 1 1/2 NPT
Module without connecting thread/connecting plate G	–
Design	Fibre filter
Type of mounting	With accessories
	In-line installation
Mounting position	Vertical ±5°
Grade of filtration [µm]	0.01 (micro filter MS9-LFM-A)
	1 (fine filter MS9-LFM-B)
Air purity class at the output	Compressed air to ISO 8573-1:2010 [3:4:2] (micro filter MS9-LFM-A)
	Compressed air to ISO 8573-1:2010 [5:4:3] (fine filter MS9-LFM-B)
Bowl guard	Integrated as metal bowl
Condensate drain	Manual, rotating
	Manual, non-detenting
	Semi-automatic
	Fully automatic
	Fully automatic, electrically actuated
Differential pressure display	Visual indicator

Note: This product conforms to ISO 1179-1 and ISO 228-1.

Datasheet

General technical data			
Variants		Standard	High flow rate HF
Residual oil content	[mg/m³]	š0.01 (micro filter MS9-LFM-A) š0.5 (fine filter MS9-LFM-B)	
Max. condensate volume	[ml]	225	
Filter efficiency, fine particles	[%]	99.995 (micro filter MS9-LFM-A) 99 (fine filter MS9-LFM-B)	
Filter efficiency, oil aerosol	[%]	99 (micro filter MS9-LFM-A) 90 (fine filter MS9-LFM-B)	
MPPS	[µm]	0.08 (micro filter MS-LFM-A)	0.1 (micro filter MS-LFM-A)
Filter efficiency MPPS	[%]	99.981 (micro filter MS-LFM-A)	99.968 (micro filter MS-LFM-A)

Standard flow rate qn1) [l/min]		
Variants	Standard	High flow rate HF
Micro filter MS9-LFM-A		
Max. standard flow rate for air purity class $q_{n\ max}$	6500	7800
Min. standard flow rate for air purity class qn min	325	390
Fine filter MS9-LFM-B		
Max. standard flow rate for air purity class $q_{n\ max}$	7000	10000
Min. standard flow rate for air purity class qn min	350	500

1) Measured at p1 = 6 bar

A flow of 125 l/min is required to ensure trouble-free closing of the fully automatic condensate drain.

Operating and environmental conditions					
Condensate drain		Manual, rotating M	Semi-automatic H	Fully automatic V	Fully automatic, electrically actuated E2, E3, E4
Operating pressure	[bar]	0 ... 20	1.5 ... 12	2 ... 12	0.8 ... 16
Operating medium		Compressed air in accordance with ISO 8573-1:2010 [6:4:4]1)			
Ambient temperature	[°C]	–10 ... +60	+5 ... +60	+5 ... +60 (–10 ... +60)[2]	+1 ... +60
Temperature of medium	[°C]	–10 ... +60	+5 ... +60	+5 ... +60 (–10 ... +60)[2]	+1 ... +60
Storage temperature	[°C]	–10 ... +60	+5 ... +60	–10 ... +60	+1 ... +60
Corrosion resistance class CRC[3]		2 - Moderate corrosion stress			
UL certification4)		c UL us - Recognized (OL)			

1) It is recommended to prefilter the compressed air for the micro filter MS-LFM-A using a fine filter MS-LFM-B (grade of filtration 1 µm).
2) For fine filter with grade of filtration 1 µm.
3) More information: www.festo.com/x/topic/crc
4) More information www.festo.com/catalogue/ms9-lfm ➔ Support/Downloads.

ATEX	
EU certification	EX4
ATEX category for gas	II 2G
Type of (ignition) protection for gas	Ex h IIC T6 Gb X
ATEX category for dust	II 2D
Type of ignition protection for dust	Ex h IIIC T60°C Db X
Explosion-proof ambient temperature	+5 °C ≤ Ta ≤ +60 °C
Explosion protection certification outside the EU	EPL Db (GB) EPL Gb (GB)
CE marking (see declaration of conformity)[1]	To EU Explosion Protection Directive (ATEX)
UKCA marking (see declaration of conformity)[1]	To UK explosion regulations

1) More information www.festo.com/catalogue/ms9-lfm ➔ Support/Downloads.

Datasheet

Weight [g] Variants	Standard	High flow rate HF
Fine and micro filter	2000	2500
Fine and micro filters with electrically actuated, fully automatic condensate drain E2, E3, E4	2900	2900

Materials

Sectional view

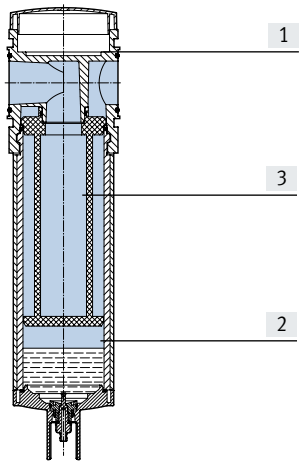

Fine and micro filter		
[1]	Housing	Die-cast aluminium
[2]	Bowl	Wrought aluminium alloy
	Inspection window	PA
[3]	Filter	Borosilicate fibre
–	Covering	Reinforced PA
–	Connecting plate, module connector, mounting bracket	Die-cast aluminium
–	Seals	NBR
LABS (PWIS) conformity		VDMA24364-B1/B2-L

Datasheet

Standard flow rate qn as a function of differential pressure p1-2

Grade of filtration 0.01 µm, pneumatic connection G1/2, 1/2 NPT

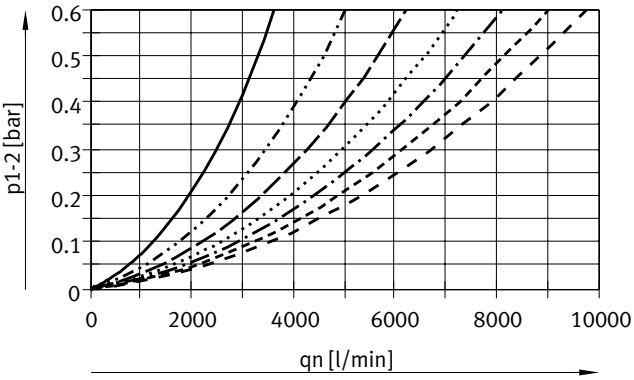

Grade of filtration 0.01 µm, pneumatic connection G3/4, 3/4 NPT

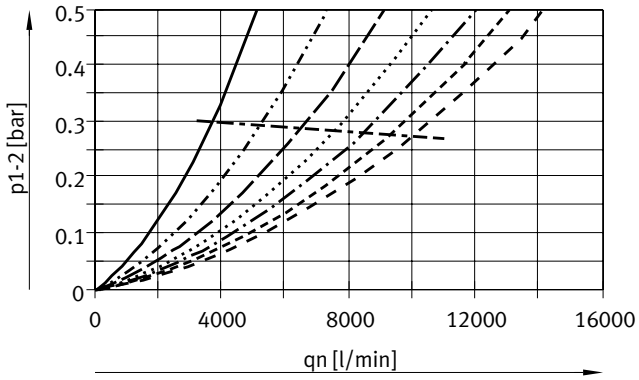

Grade of filtration 0.01 µm, pneumatic connection G1, 1 NPT

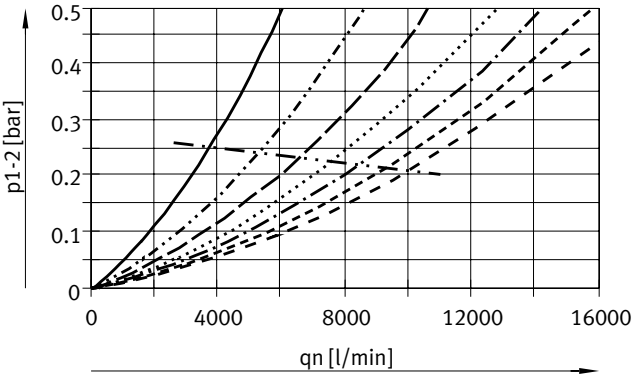

Grade of filtration 0.01 µm, pneumatic connection G1 1/4, 1 1/4 NPT

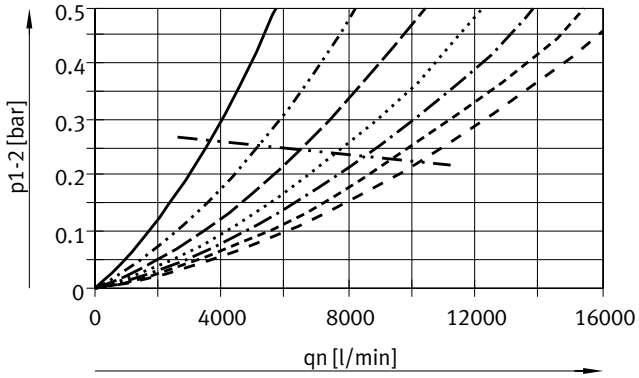

Grade of filtration 0.01 µm, pneumatic connection G1 1/2, 1 1/2 NPT

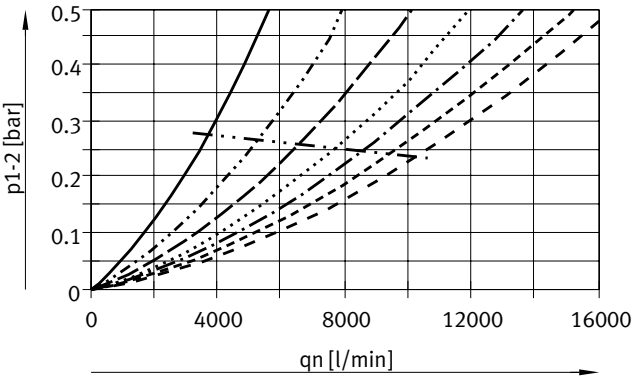

- 2 bar
- 4 bar ($q_{n\,min}$: 268 l/min)
- 6 bar ($q_{n\,min}$: 325 l/min)
- 8 bar
- 10 bar ($q_{n\,min}$: 420 l/min)
- 12 bar
- 14 bar ($q_{n\,min}$: 498 l/min)
- qn max
  (with MS9-LFM-AGD/AQR: qn max-values are above the measured qn values)

Datasheet

Standard flow rate qn as a function of differential pressure p1-2

Grade of filtration 1 µm, pneumatic connection G1/2, 1/2 NPT

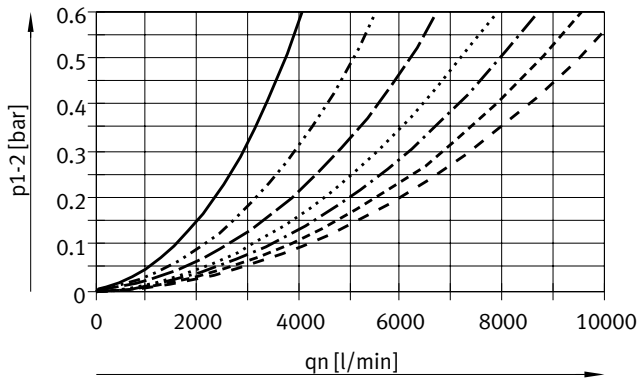

Grade of filtration 1 µm, pneumatic connection G3/4, 3/4 NPT

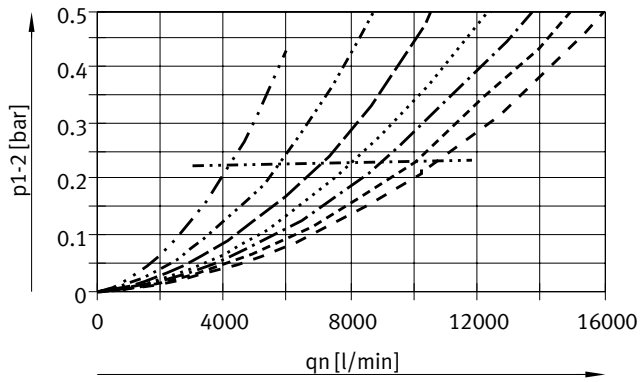

Grade of filtration 1 µm, pneumatic connection G1, 1 NPT

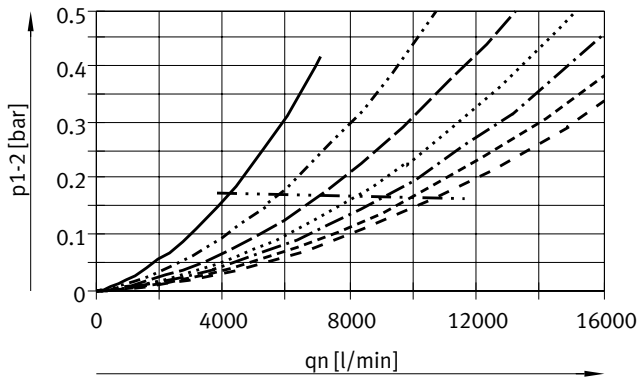

Grade of filtration 1 µm, pneumatic connection G1 1/4, 1 1/4 NPT

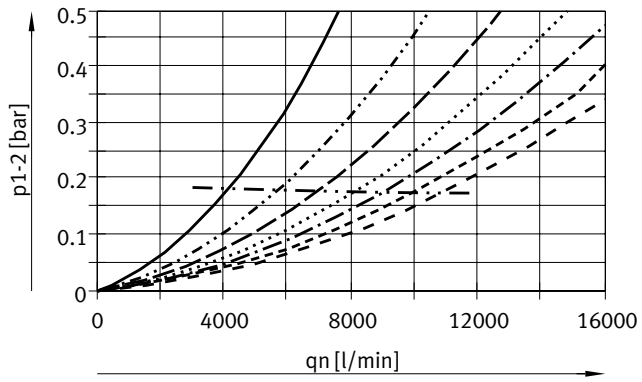

Grade of filtration 1 µm, pneumatic connection G1 1/2, 1 1/2 NPT

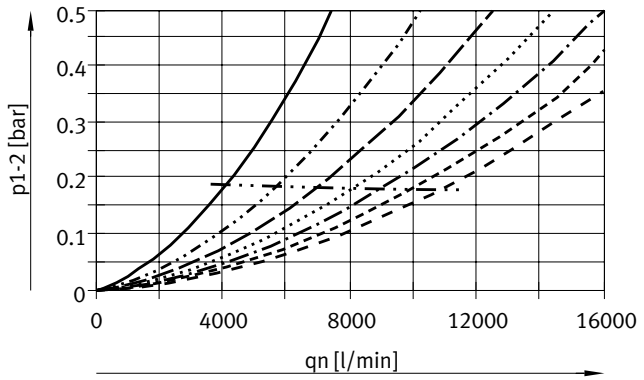

- 2 bar
- 4 bar ($q_{n\ min}$: 289 l/min)
- 6 bar ($q_{n\ min}$: 350 l/min)
- 8 bar
- 10 bar ($q_{n\ min}$: 450 l/min)
- 12 bar
- 14 bar ($q_{n\ min}$: 540 l/min)
- qn max
  (with MS9-LFM-AGD/AQR: qn max-values are above the measured qn values)

Datasheet

Standard flow rate qn as a function of differential pressure p1-2

Grade of filtration 0.01 µm, pneumatic connection G3/4, 3/4 NPT
High flow rate HF

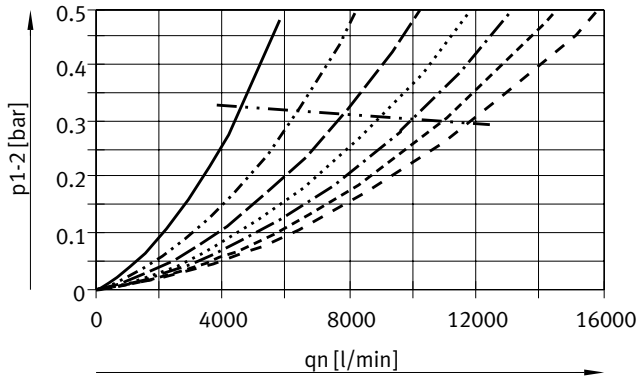

- 2 bar
- 4 bar
- 6 bar ($q_{n\ min}$: 390 l/min)
- 8 bar
- 10 bar
- 12 bar
- 14 bar
- $q_{n\ max}$

Grade of filtration 0.01 µm, pneumatic connection G1, 1 NPT
High flow rate HF

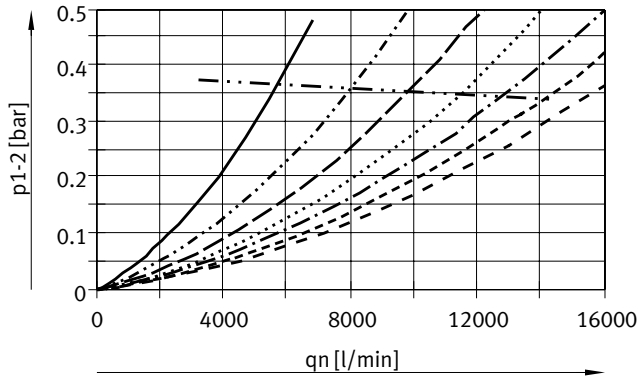

- 2 bar
- 4 bar
- 6 bar ($q_{n\ min}$: 390 l/min)
- 8 bar
- 10 bar
- 12 bar
- 14 bar
- $q_{n\ max}$

Grade of filtration 1 µm, pneumatic connection G3/4, 3/4 NPT
High flow rate HF

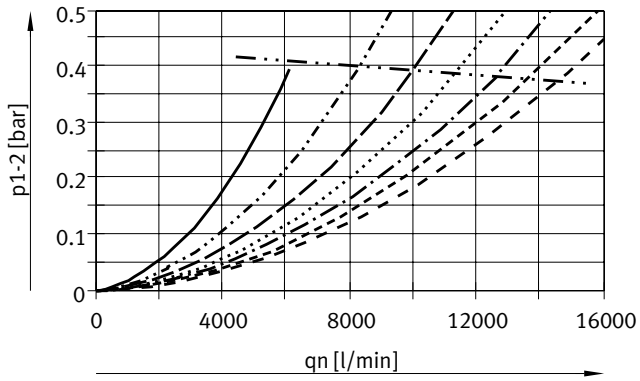

- 2 bar
- 4 bar
- 6 bar ($q_{n\ min}$: 500 l/min)
- 8 bar
- 10 bar
- 12 bar
- 14 bar
- $q_{n\ max}$

Grade of filtration 1 µm, pneumatic connection G1, 1 NPT
High flow rate HF

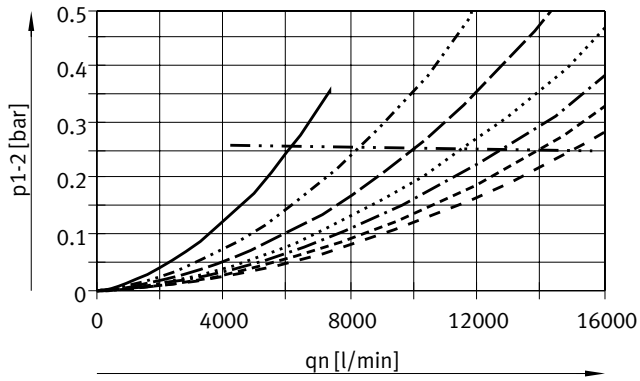

- 2 bar
- 4 bar
- 6 bar ($q_{n\ min}$: 500 l/min)
- 8 bar
- 10 bar
- 12 bar
- 14 bar
- $q_{n\ max}$

Datasheet

Dimensions – Basic version

Download CAD data ➔ www.festo.com

Module without connecting thread, without connecting plate G

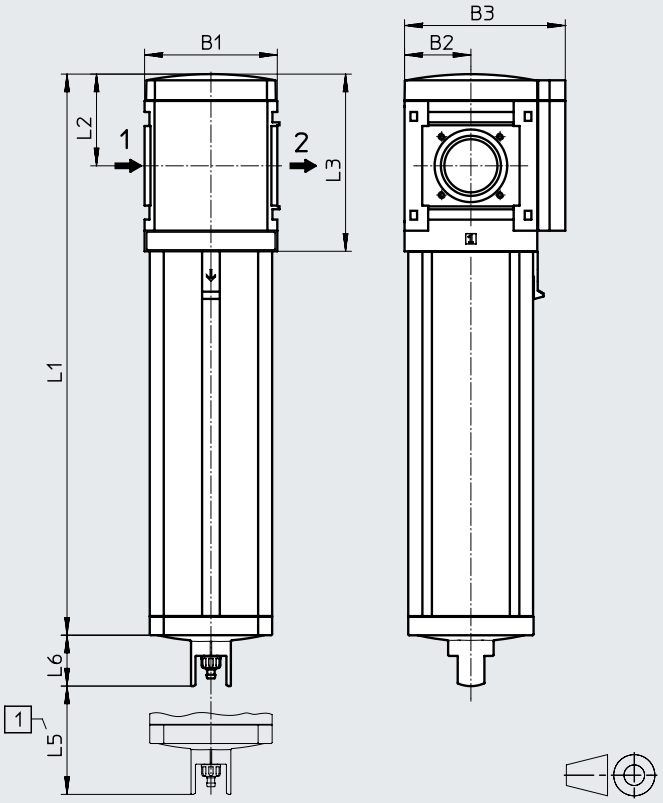

[1] Installation dimension ➔ Flow direction

Module without connecting thread, without connecting plate G, with differential pressure display DA

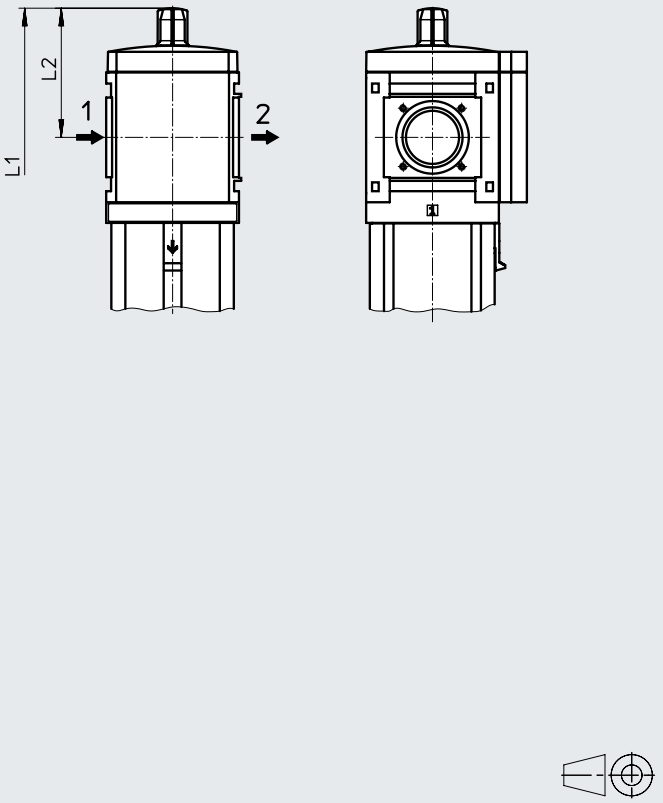

➔ Flow direction

Type	B1	B2	B3	L1		L2	L3	L5	L6
				Standard	High flow rate HF				
MS9-LFM-G	90	45	109	380.5	480.5	62	120	≥ 220	34.5
MS9-LFM-G-...-DA				405.5	505.5	88			

Datasheet

Dimensions – Connecting thread/connecting plate Download CAD data ➔ www.festo.com

With female thread 3/4, 1, N3/4, N1

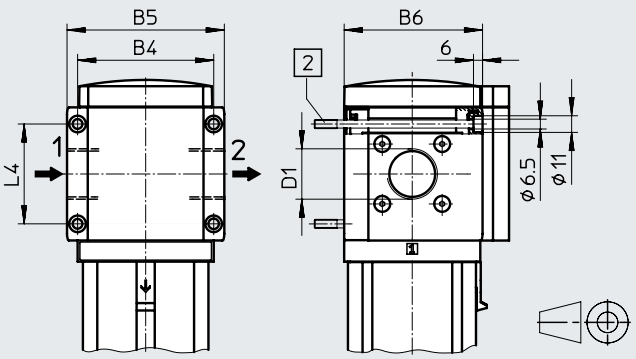

With connecting plate AG.../AQ...

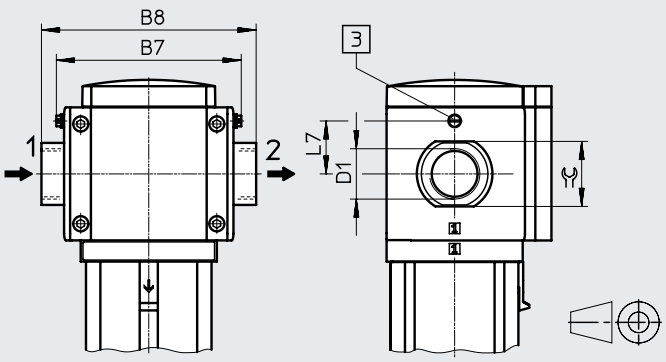

[2] Retaining screw M6xmin. 90 to DIN 912 (not included in the scope of delivery) for wall mounting without mounting bracket

[3] Earthing screw M4x8 (only with MS9-...-EX4)

➔ Flow direction

Type	B4	B5	B6	B7		B8	D1	L4	L7	⌀
					EX4				EX4	
MS9-LFM-3/4	90	104	91.5	–	–	–	G3/4	66	–	–
MS9-LFM-1							G1			
MS9-LFM-AGD	–	–	–	112	122	132	G1/2	–	35	30
MS9-LFM-AGE						132	G3/4			36
MS9-LFM-AGF						142	G1			41
MS9-LFM-AGG						162	G1 1/4			50
MS9-LFM-AGH						176	G1 1/2			55
MS9-LFM-N3/4	90	104	91.5	–	–	–	3/4 NPT	66	–	–
MS9-LFM-N1							1 NPT			
MS9-LFM-AQR	–	–	–	112	122	132	1/2 NPT	–	35	30
MS9-LFM-AQS						132	3/4 NPT			36
MS9-LFM-AQT						142	1 NPT			41
MS9-LFM-AQU						162	1 1/4 NPT			50
MS9-LFM-AQV						176	1 1/2 NPT			55

Note: This product conforms to ISO 1179-1 and ISO 228-1.

Datasheet

Dimensions – Condensate drain

Download CAD data ➔ www.festo.com

[M] Manual, rotating

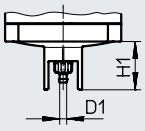

Barbed connector for plastic tubing
PUN(-H)-8x1.25

[H] Semi-automatic/[V] Fully automatic

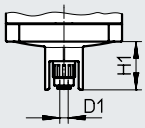

Push-in connector for plastic tubing
PUN-6/PAN-6

[E2], [E3], [E4] Fully automatic, electrically actuated

Datasheets ➔ Internet: pwea

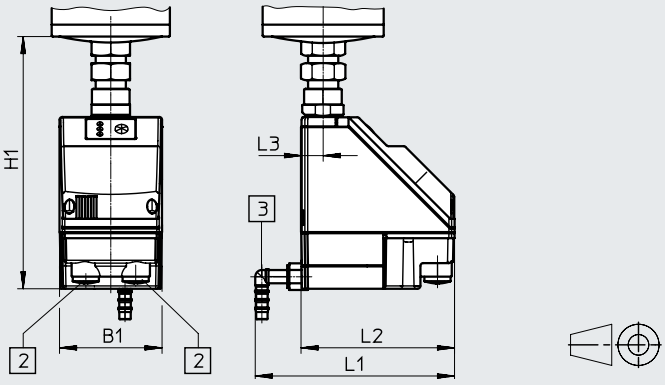

Condensate drain PWEA:
[2] Electrical connection: screw terminal PG9
[3] Connection can be rotated 360° for plastic tubing PUN-H-12x2

Type	B1	D1	H1	L1	L2	L3
MS9-LFM-...-M	–	5.6	34.5	–	–	–
MS9-LFM-...-H/V		6.2				
MS9-LFM-...-E2, E3, E4	72	–	178	140	108	15

Datasheet

Ordering data
Without differential pressure display

Size	Condensate drain	Connection	Micro filter Grade of filtration 0.01 µm		Fine filters Grade of filtration 1 µm	
			Part no.	Type	Part no.	Type
Standard						
MS9	Manual, rotating	G3/4	**553070**	**MS9-LFM-3/4-AUM**	**553074**	**MS9-LFM-3/4-BUM**
		G1	**553000**	**MS9-LFM-1-AUM**	**553004**	**MS9-LFM-1-BUM**
		–	**564047**	**MS9-LFM-G-AUM**	**564039**	**MS9-LFM-G-BUM**
	Fully automatic	G3/4	**553072**	**MS9-LFM-3/4-AUV**	**553076**	**MS9-LFM-3/4-BUV**
		G1	**553002**	**MS9-LFM-1-AUV**	**553006**	**MS9-LFM-1-BUV**
		–	**564049**	**MS9-LFM-G-AUV**	**564041**	**MS9-LFM-G-BUV**
High flow rate						
MS9	Manual, rotating	G3/4	**552964**	**MS9-LFM-3/4-AUM-HF**	**552968**	**MS9-LFM-3/4-BUM-HF**
		G1	**553038**	**MS9-LFM-1-AUM-HF**	**553042**	**MS9-LFM-1-BUM-HF**
		–	**564051**	**MS9-LFM-G-AUM-HF**	**564043**	**MS9-LFM-G-BUM-HF**
	Fully automatic	G3/4	**552966**	**MS9-LFM-3/4-AUV-HF**	**552970**	**MS9-LFM-3/4-BUV-HF**
		G1	**553040**	**MS9-LFM-1-AUV-HF**	**553044**	**MS9-LFM-1-BUV-HF**
		–	**564053**	**MS9-LFM-G-AUV-HF**	**564045**	**MS9-LFM-G-BUV-HF**

Ordering data
With differential pressure display

Size	Condensate drain	Connection	Micro filter Grade of filtration 0.01 µm		Fine filters Grade of filtration 1 µm	
			Part no.	Type	Part no.	Type
Standard						
MS9	Manual, rotating	G3/4	**553078**	**MS9-LFM-3/4-AUM-DA**	**553082**	**MS9-LFM-3/4-BUM-DA**
		G1	**553008**	**MS9-LFM-1-AUM-DA**	**553012**	**MS9-LFM-1-BUM-DA**
		–	**564048**	**MS9-LFM-G-AUM-DA**	**564040**	**MS9-LFM-G-BUM-DA**
	Fully automatic	G3/4	**553080**	**MS9-LFM-3/4-AUV-DA**	**553084**	**MS9-LFM-3/4-BUV-DA**
		G1	**553010**	**MS9-LFM-1-AUV-DA**	**553014**	**MS9-LFM-1-BUV-DA**
		–	**564050**	**MS9-LFM-G-AUV-DA**	**564042**	**MS9-LFM-G-BUV-DA**
High flow rate						
MS9	Manual, rotating	G3/4	**552972**	**MS9-LFM-3/4-AUM-HF-DA**	**552976**	**MS9-LFM-3/4-BUM-HF-DA**
		G1	**553046**	**MS9-LFM-1-AUM-HF-DA**	**553050**	**MS9-LFM-1-BUM-HF-DA**
		–	**564052**	**MS9-LFM-G-AUM-HF-DA**	**564044**	**MS9-LFM-G-BUM-HF-DA**
	Fully automatic	G3/4	**552974**	**MS9-LFM-3/4-AUV-HF-DA**	**552978**	**MS9-LFM-3/4-BUV-HF-DA**
		G1	**553048**	**MS9-LFM-1-AUV-HF-DA**	**553052**	**MS9-LFM-1-BUV-HF-DA**
		–	**564054**	**MS9-LFM-G-AUV-HF-DA**	**564046**	**MS9-LFM-G-BUV-HF-DA**

Ordering data – Modular product system

Ordering table					
Grid dimension [mm]		90	Conditions	Code	Enter code
Module no.		**552940**			
Series		Standard service unit		**MS**	MS
Size		9		**9**	9
Function		Fine and micro filter		**-LFM**	-LFM
Pneumatic connection		Female thread G3/4	[1]	**-3/4**	
		Female thread G1	[1]	**-1**	
		Connecting plate G1/2		**-AGD**	
		Connecting plate G3/4		**-AGE**	
		Connecting plate G1		**-AGF**	
		Connecting plate G1 1/4		**-AGG**	
		Connecting plate G1 1/2		**-AGH**	
		Female thread 3/4 NPT	[1]	**-N3/4**	
		Female thread 1 NPT	[1]	**-N1**	
		Connecting plate 1/2 NPT	[1]	**-AQR**	
		Connecting plate 3/4 NPT	[1]	**-AQS**	
		Connecting plate 1 NPT	[1]	**-AQT**	
		Connecting plate 1 1/4 NPT	[1]	**-AQU**	
		Connecting plate 1 1/2 NPT	[1]	**-AQV**	
		Module without connecting thread, without connecting plate	[1]	**-G**	
Grade of filtration		1 µm		**-B**	
		0.01 µm		**-A**	
Bowl		Metal bowl		**-U**	-U
Condensate drain		Manual		**-M**	
		Semi-automatic (P1 max. 12 bar)		**-H**	
		Fully automatic (P1 max. 12 bar) open without pressure		**-V**	
		Fully automatic (P1 max. 12 bar) closed without pressure		**-VC**	
	External, fully automatic, electric	115 V AC, connection terminals (P1 max. 16 bar)	[1]	**-E2**	
		230 V AC, connection terminals (P1 max. 16 bar)	[1]	**-E3**	
		24 V DC, connection terminals (P1 max. 16 bar)	[1]	**-E4**	
Flow rate		High flow rate		**-HF**	
Filter change sensing		Differential pressure display, visual		**-DA**	
Type of mounting		Mounting bracket standard design	[2]	**-WP**	
		Mounting bracket for hooking in service unit components	[1] [2]	**-WPM**	
		Mounting bracket for large wall gap	[2]	**-WPB**	
EU certification		II 2GD to EU Explosion Protection Directive (ATEX)		**-EX4**	
UL certification		cULus, ordinary location for Canada and USA		**-UL1**	
Flow direction		Flow direction from right to left		**-Z**	

[1] 3/4, 1, N3/4, N1, AQR, AQS, AQT, AQU, AQV, G, E2, E3, E4, WPM
Not with EU EX4 certification

[2] WP, WPM, WPB Not with pneumatic connection G

Peripherals overview

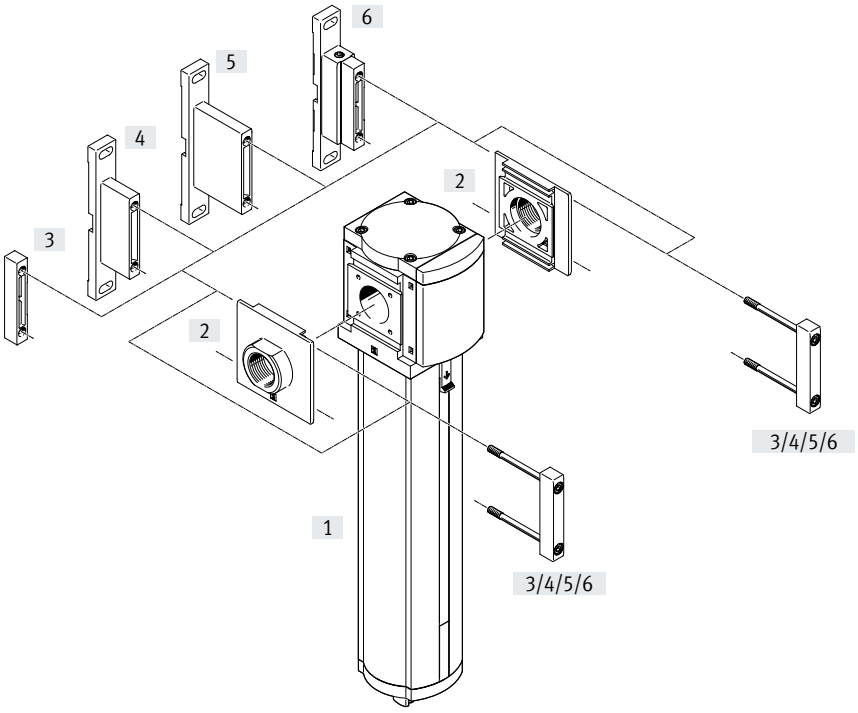

Note

Additional accessories:

- Module connector for combination with sizes MS6/MS9 or MS12
  ➔ internet: rmv, armv

Mounting attachments and accessories

		Individual device			Combination	➔ Page/Internet
		With female thread 3/4, 1, N3/4, N1	With connecting plate AG.../AQ...		Module without connecting thread, without connecting plate G	
			Without EU EX4 certification	With EU EX4 certification		
[1]	Activated carbon filter MS9-LFX	■	■	■	■	66
[2]	Connecting plate SET MS9-AG...	–	■	■	■	ms9-ag
	Connecting plate SET MS9-AQ...	–	■	–	■	ms9-aq
[3]	Module connector MS9-MV	–	–	–	■	ms9-mv
[4]	Mounting bracket MS9-WP	■	■	■	■	ms9-wp
[5]	Mounting bracket MS9-WPB	■	■	■	■	ms9-wp
[6]	Mounting bracket MS9-WPM	■	■	–	■	ms9-wp

Type codes

001	Series	
MS	MS series	

002	Size	
9	Grid dimension 90 mm	

003	Function	
LFX	Activated carbon filter	

004	Pneumatic connection	
3/4	Female thread G3/4	
1	Female thread G1	
AGD	Sub-base G1/2	
AGE	Sub-base G3/4	
AGF	Sub-base G1	
AGG	Connecting plate G1 1/4	
AGH	Connecting plate G1 1/2	
N3/4	Female thread 3/4 NPT	
N1	Female thread 1 NPT	
AQR	Sub-base 1/2 NPT	
AQS	Sub-base 3/4 NPT	
AQT	Sub-base 1 NPT	
AQU	Sub-base 1 1/4 NPT	
AQV	Sub-base 1 1/2 NPT	
G	Module without connecting thread, without sub-base	

005	Bowl type	
U	Aluminium	

006	Type of mounting	
	Without mounting bracket	
WP	Mounting bracket basic design	
WPB	Mounting bracket for large wall gap	
WPM	Mounting bracket for hooking in service unit components	

007	UL certification	
	None	
UL1	cULus ordinary location for Canada and USA	

008	Flow direction	
	Flow direction from left to right	
Z	Flow direction from right to left	

Additional variants can be ordered using the modular product system → Page 70

- Pneumatic connection
- Type of mounting
- EU certification
- UL certification
- Flow direction

Datasheet

Function

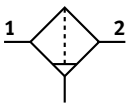

Flow rate
max. 6500 l/min

Temperature range
–10 ... +60 °C

Operating pressure
0 ... 20 bar

- Removes liquid and gaseous oil particles from compressed air using activated carbon
- Eliminates odours and vapours
- Prefiltration with micro filter MS9-LFM-A (grade of filtration 0.01 µm) is recommended
- New filter cartridges ➔ Page 94
- Optional device variant EX4 for use in potentially explosive areas in zones 1, 2, 21 and 22

General technical data		
Size		MS9
Pneumatic connection 1, 2		
	Female thread	G3/4, G1, 3/4 NPT or 1 NPT
	Connecting plate AG...	G1/2, G3/4, G1, G1 1/4 or G1 1/2
	Connecting plate AQ...	1/2 NPT, 3/4 NPT, 1 NPT, 1 1/4 NPT or 1 1/2 NPT
	Module without connecting thread/connecting plate G	–
Design		Activated carbon filter
Type of mounting		With accessories
		In-line installation
Mounting position		Vertical ±5°
Air purity class at the output1)		Compressed air to ISO 8573-1:2010 [3:4:1]
Bowl guard		Integrated as metal bowl
Residual oil content	[mg/m³]	≤0.003

1) It is recommended to replace the filter cartridge with a new cartridge after 1000 operating hours (applicable for ambient temperature of 21 °C). The service life of the filter cartridges is reduced at higher temperatures.

Note: This product conforms to ISO 1179-1 and ISO 228-1.

Standard flow rate qn1) [l/min]	
Max. standard flow rate for air purity class $q_{n\ max}$	6500

1) Measured at p1 = 6 bar

Operating and environmental conditions		
Operating pressure	[bar]	0 ... 20
Operating medium		Compressed air to ISO 8573-1:2010 [3:4:2]
Ambient temperature	[°C]	–10 ... +60
Temperature of medium	[°C]	+5 ... +30
Storage temperature	[°C]	–10 ... +60
Corrosion resistance class CRC[1)]		2
UL certification2)		c UL us - Recognized (OL)

1) More information: www.festo.com/x/topic/crc

2) More information www.festo.com/catalogue/ms9-lfx ➔ Support/Downloads.

Datasheet

ATEX	
EU certification	EX4
ATEX category for gas	II 2G
Type of (ignition) protection for gas	Ex h IIC T6 Gb X
ATEX category for dust	II 2D
Type of ignition protection for dust	Ex h IIIC T60°C Db X
Explosion-proof ambient temperature	–10 °C ≤ Ta ≤ +60 °C
Explosion protection certification outside the EU	EPL Db (GB) EPL Gb (GB)
CE marking (see declaration of conformity)[1]	To EU Explosion Protection Directive (ATEX)
UKCA marking (see declaration of conformity)[1]	To UK explosion regulations

1) More information www.festo.com/catalogue/ms9-lfx → Support/Downloads.

Weight [g]	
Activated carbon filter	2000

Materials

Sectional view

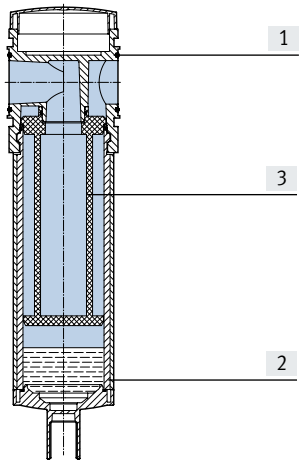

Activated carbon filter		
[1]	Housing	Die-cast aluminium
[2]	Bowl	Wrought aluminium alloy
	Inspection window	PA
[3]	Filter	Activated carbon
–	Covering	Reinforced PA
–	Connecting plate, module connector, mounting bracket	Die-cast aluminium
–	Seals	NBR
LABS (PWIS) conformity		VDMA24364-B1/B2-L

Standard flow rate qn as a function of differential pressure p1-2

Pneumatic connection G1/2, 1/2 NPT

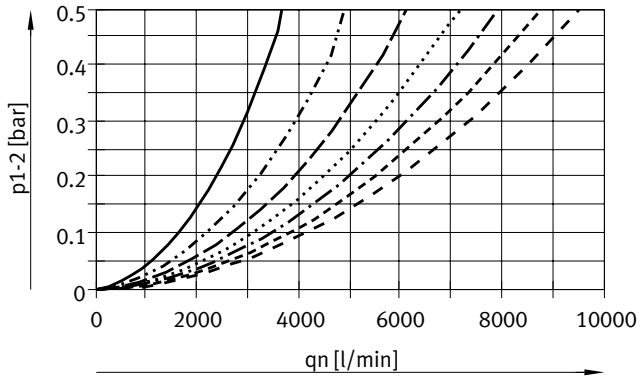

2 bar
4 bar
6 bar
8 bar
10 bar
12 bar
14 bar

Pneumatic connection G3/4, 3/4 NPT

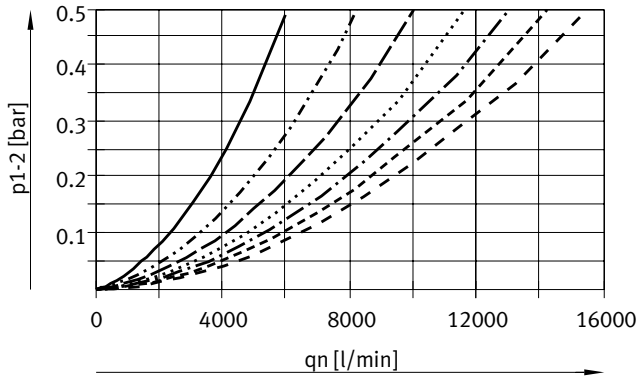

2 bar
4 bar
6 bar
8 bar
10 bar
12 bar
14 bar

Datasheet

Standard flow rate qn as a function of differential pressure p1-2

Pneumatic connection G1, 1 NPT

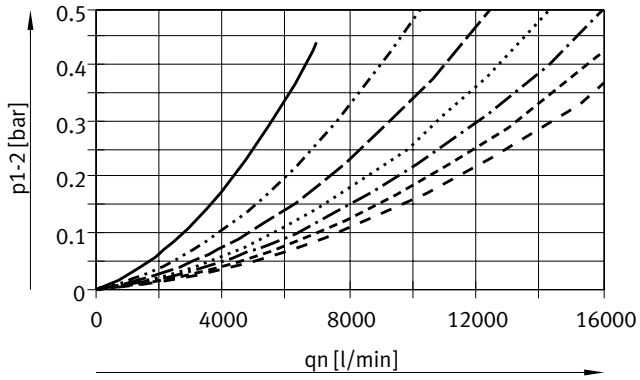

Pneumatic connection G1 1/2, 1 1/2 NPT

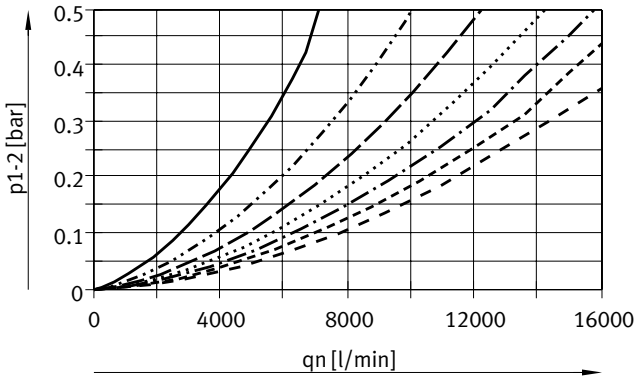

- 2 bar
- 4 bar
- 6 bar
- 8 bar
- 10 bar
- 12 bar
- 14 bar

Dimensions – Basic version

Download CAD data ➔ www.festo.com

Module without connecting thread, without connecting plate G

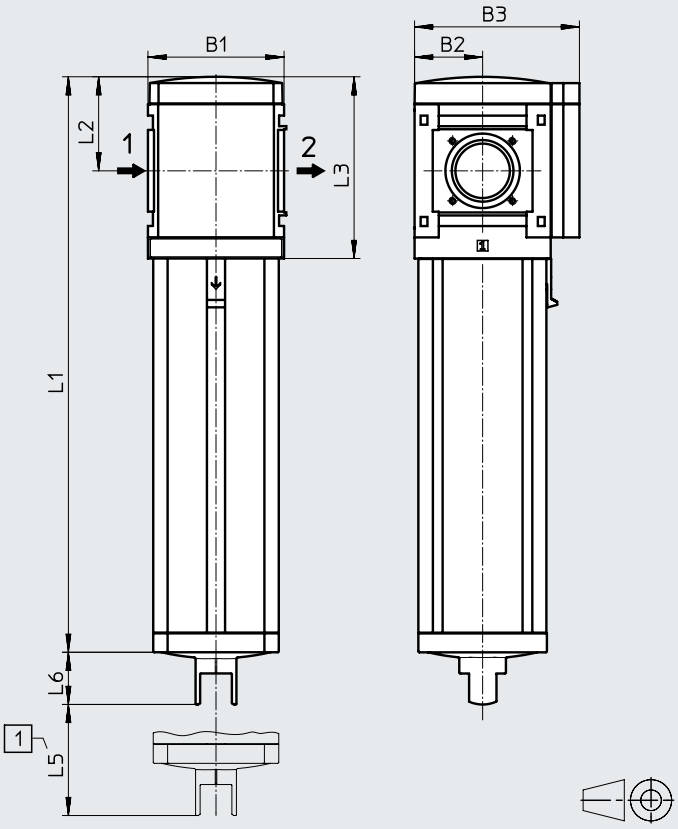

[1] Installation dimension

➔ Flow direction

Type	B1	B2	B3	L1	L2	L3	L5	L6
MS9-LFX-G	90	45	109	380.5	62	120	≥ 220	34.5

Datasheet

Dimensions – Connecting thread/connecting plate

Download CAD data ➔ www.festo.com

With female thread 3/4, 1, N3/4, N1

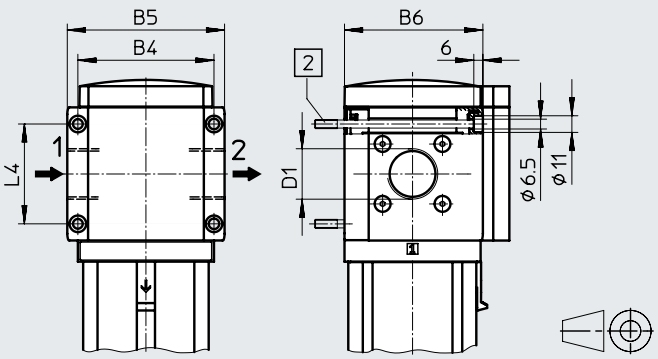

[2] Retaining screw M6xmin. 90 to DIN 912 (not included in the scope of delivery) for wall mounting without mounting bracket

With connecting plate AG.../AQ...

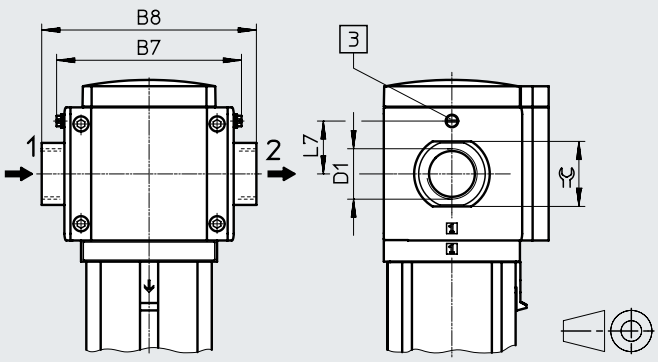

[3] Earthing screw M4x8 (only with MS9-...-EX4)

➔ Flow direction

Type	B4	B5	B6	B7		B8	D1	L4	L7	⌀
					EX4				EX4	
MS9-LFX-3/4	90	104	91.5	–	–	–	G3/4	66	–	–
MS9-LFX-1							G1			
MS9-LFX-AGD	–	–	–	112	122	132	G1/2	–	35	30
MS9-LFX-AGE						132	G3/4			36
MS9-LFX-AGF						142	G1			41
MS9-LFX-AGG						162	G1 1/4			50
MS9-LFX-AGH						176	G1 1/2			55
MS9-LFX-N3/4	90	104	91.5	–	–	–	3/4 NPT	66	–	–
MS9-LFX-N1							1 NPT			
MS9-LFX-AQR	–	–	–	112	122	132	1/2 NPT	–	35	30
MS9-LFX-AQS						132	3/4 NPT			36
MS9-LFX-AQT						142	1 NPT			41
MS9-LFX-AQU						162	1 1/4 NPT			50
MS9-LFX-AQV						176	1 1/2 NPT			55

Note: This product conforms to ISO 1179-1 and ISO 228-1.

Ordering data

Size	Connection	Part no.	Type
MS9	G3/4	**552996**	**MS9-LFX-3/4-U**
	G1	**553032**	**MS9-LFX-1-U**
	–	**564038**	**MS9-LFX-G-U**

Ordering data – Modular product system

Ordering table					
Grid dimension [mm]	90	Conditions	Code		Enter code
Module no.	**552942**				
Series	Standard service unit		**MS**		MS
Size	9		**9**		9
Function	Activated carbon filter		**-LFX**		-LFX
Pneumatic connection	Female thread G3/4	[1]	**-3/4**		
	Female thread G1	[1]	**-1**		
	Connecting plate G1/2		**-AGD**		
	Connecting plate G3/4		**-AGE**		
	Connecting plate G1		**-AGF**		
	Connecting plate G1 1/4		**-AGG**		
	Connecting plate G1 1/2		**-AGH**		
	Female thread 3/4 NPT	[1]	**-N3/4**		
	Female thread 1 NPT	[1]	**-N1**		
	Connecting plate 1/2 NPT	[1]	**-AQR**		
	Connecting plate 3/4 NPT	[1]	**-AQS**		
	Connecting plate 1 NPT	[1]	**-AQT**		
	Connecting plate 1 1/4 NPT	[1]	**-AQU**		
	Connecting plate 1 1/2 NPT	[1]	**-AQV**		
	Module without connecting thread, without connecting plate	[1]	**-G**		
Bowl	Metal bowl		**-U**		-U
Type of mounting	Mounting bracket standard design	[2]	**-WP**		
	Mounting bracket for hooking in service unit components	[1] [2]	**-WPM**		
	Mounting bracket for large wall gap	[2]	**-WPB**		
EU certification	II 2GD to EU Explosion Protection Directive (ATEX)		**-EX4**		
UL certification	cULus, ordinary location for Canada and USA		**-UL1**		
Flow direction	Flow direction from right to left		**-Z**		

[1] 3/4, 1, N3/4, N1, AQR, AQS, AQT, AQU, AQV, G, WPM
Not with EU EX4 certification

[2] WP, WPM, WPB Not with pneumatic connection G

Peripherals overview

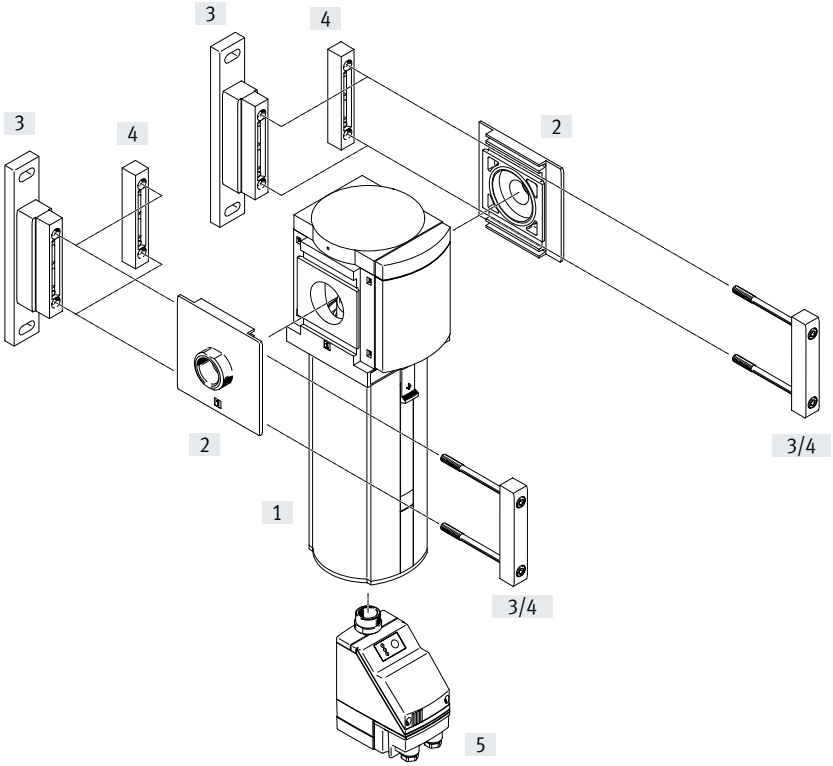

Note

Additional accessories:

- Module connector for combination with size MS9 a Internet: armv

Mounting attachments and accessories		→ Page/Internet
[1]	Filter MS12-LF	73
[2]	Connecting plate SET MS12-AG...	ms12-ag
[3]	Mounting bracket MS12-WP	ms12-wp
[4]	Module connector MS12-MV	ms12-mv
[5]	Fully automatic condensate drain, electrically actuated E2, E3, E4	76

Type codes

001	Series	
MS	MS series	

002	Size	
12	Grid dimension 124 mm	

003	Function	
LF	Filter	

004	Pneumatic connection	
AGF	Sub-base G1	
AGG	Connecting plate G1 1/4	
AGH	Connecting plate G1 1/2	
AGI	Sub-base G2	
G	Module without connecting thread, without sub-base	

005	Filter design	
C	5 µm	
E	40 µm	

006	Bowl type	
U	Aluminium	

007	Condensate drain	
E2	External fully automatic condensate drain, electric, 110 V AC, connection terminals	
E3	External fully automatic condensate drain, electric, 230 V AC, connection terminals	
E4	External fully automatic condensate drain, electric, 24 V DC, connection terminals	
M	Manual	
V	Fully automatic, normally open	
VC	Fully automatic, normally closed	

008	Type of mounting	
	Without mounting bracket	
WP	Mounting bracket basic design	

009	Flow direction	
	Flow direction from left to right	
Z	Flow direction from right to left	

Additional variants can be ordered using the modular product system → Page 77

- Pneumatic connection
- Condensate drain
- Type of mounting
- Flow direction

Datasheet

Function
Condensate drain
Manual, rotating

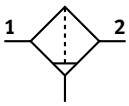

Fully automatic

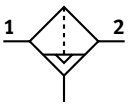

Flow rate
11500 ... 16000 l/min

Temperature range
10 ... +60 °C

Operating pressure
0.8 ... 20 bar

The sintered filter with centrifugal water separator removes contamination, rust and condensate from the compressed air. The filter cartridges can be replaced.

- Good particle and condensate separation
- High flow rate with minimal pressure drop
- Available with manual, fully automatic or fully automatic, electrically actuated condensate drain
- Choice of filter inserts 5 µm or 40 µm
- New filter cartridges ➔ Page 95

General technical data		
Pneumatic connection 1, 2		
	Connecting plate AG...	G1, G1 1/4, G1 1/2 or G2
	Module without connecting thread/connecting plate G	Internal
Design		Sintered filter with centrifugal separator
Type of mounting		With accessories
		In-line installation
Mounting position		Vertical ±5°
Grade of filtration	[µm]	5
		40
Pore size	[µm]	< 5
		< 40
Air purity class at the output		Compressed air to ISO 8573-1:2010 [6:8:4] (grade of filtration 5 µm)
		Compressed air to ISO 8573-1:2010 [7:8:4] (grade of filtration 40 µm)
Bowl guard		Integrated as metal bowl
Condensate drain		Manual, rotating
		Fully automatic
		Fully automatic, electrically actuated
Degree of condensate separation	[%]	> 75
Max. condensate volume	[cm^3]	400

Note: This product conforms to ISO 1179-1 and ISO 228-1.

Standard nominal flow rate qnN1) [l/min]					
Pneumatic connection		G1	G1 1/4	G1 1/2	G2
Grade of filtration	5 µm	11500	12500	13500	14000
	40 µm	12500	13000	14000	16000

1) Dependent on the connecting plate selected; must be ordered separately as an accessory ➔ Internet: ms12-ag
Measured at p1 = 6 bar and Δp = 0.5 bar

A flow of 125 l/min is required to ensure trouble-free closing of the fully automatic condensate drain.

Datasheet

Operating and environmental conditions				
Condensate drain		Manual, rotating M	Fully automatic V	Fully automatic, electrically actuated E2, E3, E4
Operating pressure	[bar]	0.8 ... 20	2 ... 12	0.8 ... 16
Operating medium		Compressed air to ISO 8573-1:2010 [–:9:–]	Compressed air to ISO 8573-1:2010 [7:9:–]	Compressed air to ISO 8573-1:2010 [–:9:–]
		Inert gases		
Note on the operating/pilot medium		–	Ester oil < 0.1mg/m³, according to ISO 8573-1:2010 [-:-:2]	–
Ambient temperature	[°C]	–10 ... +60	+5 ... +60	+1 ... +60
Temperature of medium	[°C]	–10 ... +60	+5 ... +60	+1 ... +60
Storage temperature	[°C]	–10 ... +60	–10 ... +60	+1 ... +60
Corrosion resistance class	CRC[1)]	2		

1) More information: www.festo.com/x/topic/crc

Weight [g]	
Filter with metal bowl U	6500
Filter with metal bowl U and electrically actuated, fully automatic condensate drain E2, E3, E4	7200

Materials

Sectional view

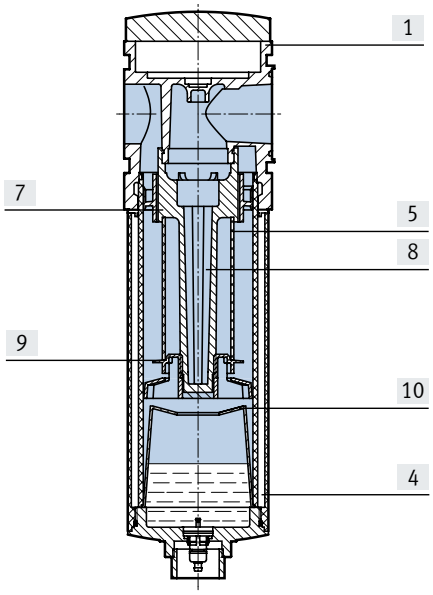

Filter		
[1]	Housing	Die-cast aluminium
[4]	Metal bowl	Wrought aluminium alloy
[5]	Filter element	Sintered bronze
[7]	Spin disc	POM
[8]	Filter support	POM
[9]	Separating disc	POM
[10]	Stabilising disc	POM
–	Seals	NBR
LABS (PWIS) conformity		VDMA24364-B1/B2-L

Standard flow rate qn as a function of differential pressure Δp1–2

Grade of filtration 5 µm	With connecting plate MS12-AGF Pneumatic connection G1	With connecting plate MS12-AGI Pneumatic connection G2

p1 = 6 bar

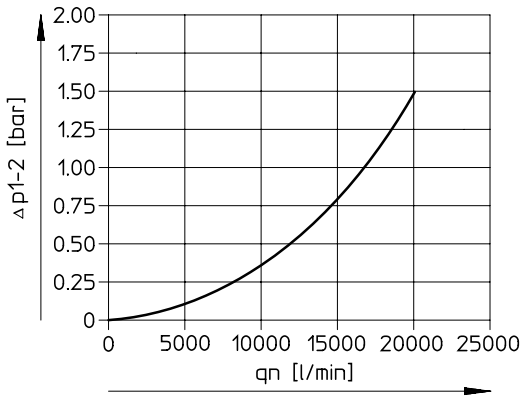

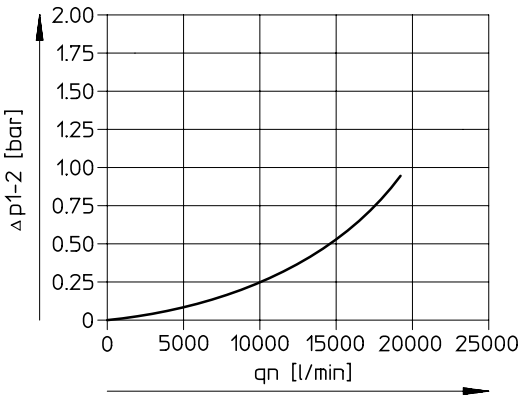

Datasheet

Standard flow rate qn as a function of differential pressure Δp1–2

Grade of filtration 40 µm	With connecting plate MS12-AGF Pneumatic connection G1	With connecting plate MS12-AGI Pneumatic connection G2

p1 = 6 bar

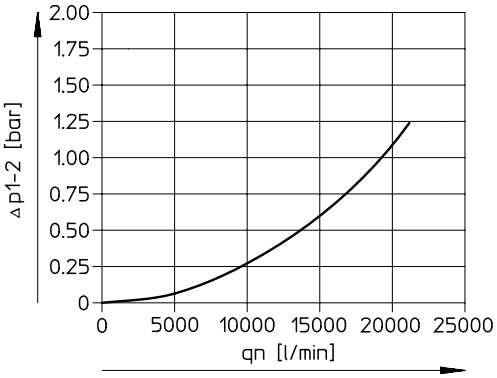

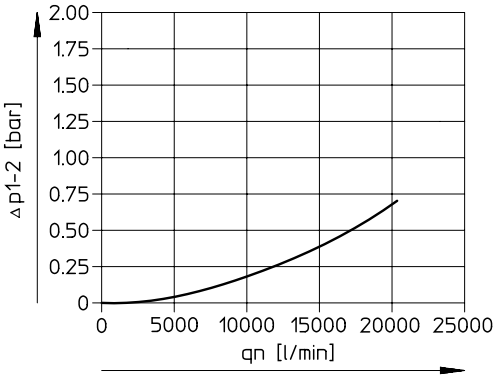

Dimensions – Basic version

Download CAD data ➔ www.festo.com

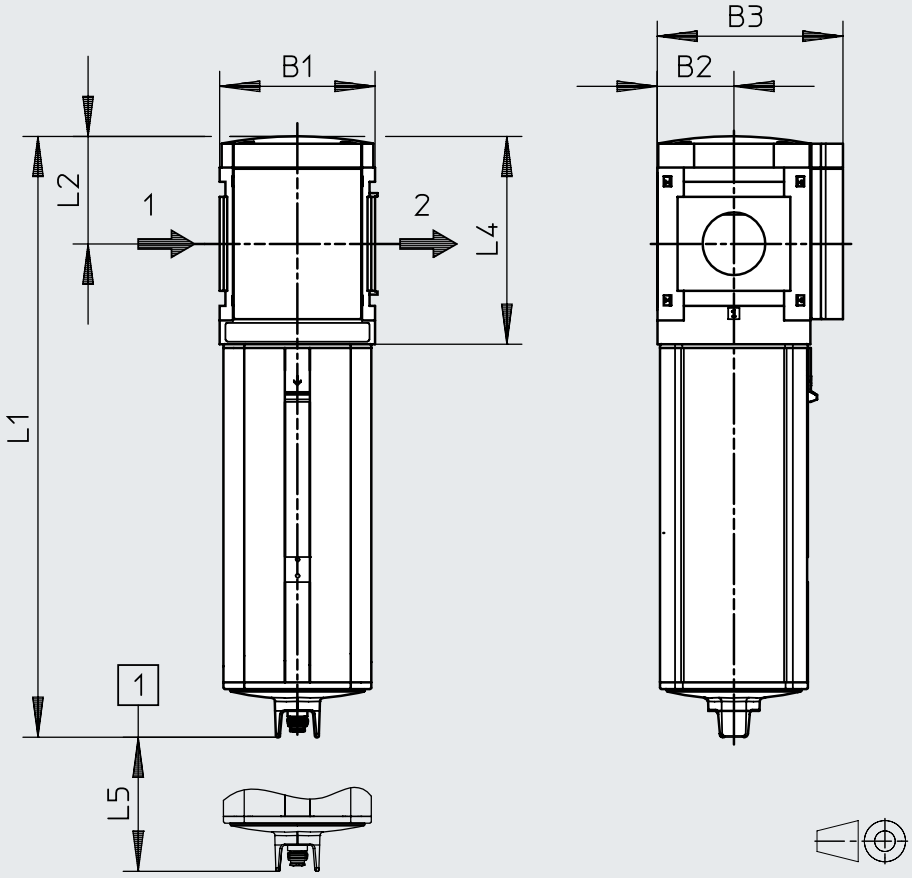

[1] Installation dimension

➔ Flow direction

Type	B1	B2	B3	L1	L2	L4	L5
MS12-LF	124	61	148	480	86	166	250

Datasheet

Dimensions – Condensate drain

Download CAD data ➔ www.festo.com

[M] Manual, rotating

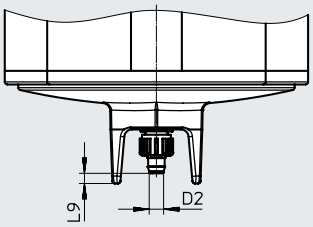

Barbed connector for plastic tubing PUN(-H)-8x1.25

[V] Fully automatic

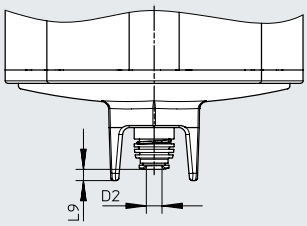

Push-in connector for plastic tubing PUN-6/PAN-6

[E2], [E3], [E4] Fully automatic, electrically actuated

Datasheets ➔ Internet: pwea

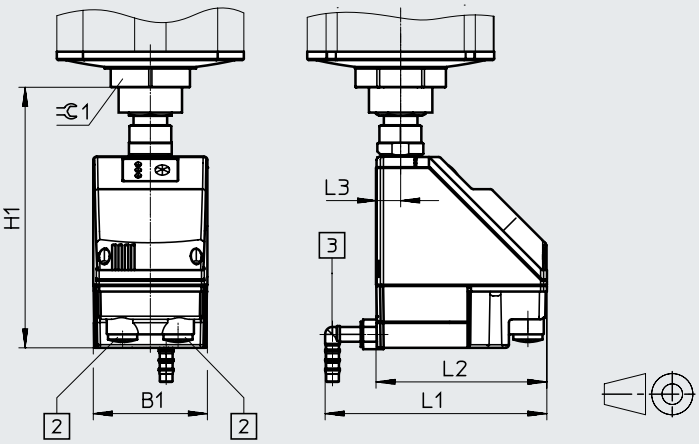

Condensate drain PWEA:

[2] Electrical connection: screw terminal PG9

[3] Connection can be rotated 360° for plastic tubing PUN-H-12x2

Type	B1	D2 ø	H1	L1	L2	L3	L9	⌲ 1
MS12-LF-...-M	–	5.6	–	–	–	–	4	–
MS12-LF-...-V	–	6.2	–	–	–	–	4.5	–
MS12-LF-...-E2, E3, E4	72	–	164	140	108	15	–	50

Ordering data

Metal bowl

Size	Condensate drain	Connection	Grade of filtration 5 µm			Grade of filtration 40 µm	
			Part no.	Type		Part no.	Type
MS12	Fully automatic	G1 ... G2[1]	**537152**	**MS12-LF-G-CUV**		**537151**	**MS12-LF-G-EUV**

1) Connecting plate must be ordered separately as an accessory a Internet: ms12-ag

Note: This product conforms to ISO 1179-1 and ISO 228-1.

Ordering data – Modular product system

Ordering table					
Grid dimension [mm]		124	Conditions	Code	Enter code
Module no.		**535023**			
Series		Standard		**MS**	MS
Size		12		**12**	12
Function		Filter		**-LF**	-LF
Pneumatic connection		Connecting plate G1		**-AGF**	
		Connecting plate G1 1/4		**-AGG**	
		Connecting plate G1 1/2		**-AGH**	
		Connecting plate G2		**-AGI**	
		Module without connecting thread, without connecting plate		**-G**	
Grade of filtration		40 µm		**-E**	
		5 µm		**-C**	
Bowl		Metal bowl		**-U**	-U
Condensate drain		Manual		**-M**	
		Fully automatic (P1 max. 12 bar) open without pressure		**-V**	
		Fully automatic (P1 max. 12 bar) closed without pressure		**-VC**	
	External, fully automatic, electric	115 V AC, connection terminals (P1 max. 16 bar)		**-E2**	
		230 V AC, connection terminals (P1 max. 16 bar)		**-E3**	
		24 V DC, connection terminals (P1 max. 16 bar)		**-E4**	
Type of mounting		Mounting bracket standard design	[1]	**-WP**	
Flow direction		Flow direction from right to left		**-Z**	

[1] WP Only with connecting plate AGF, AGG, AGH or AGI

Peripherals overview

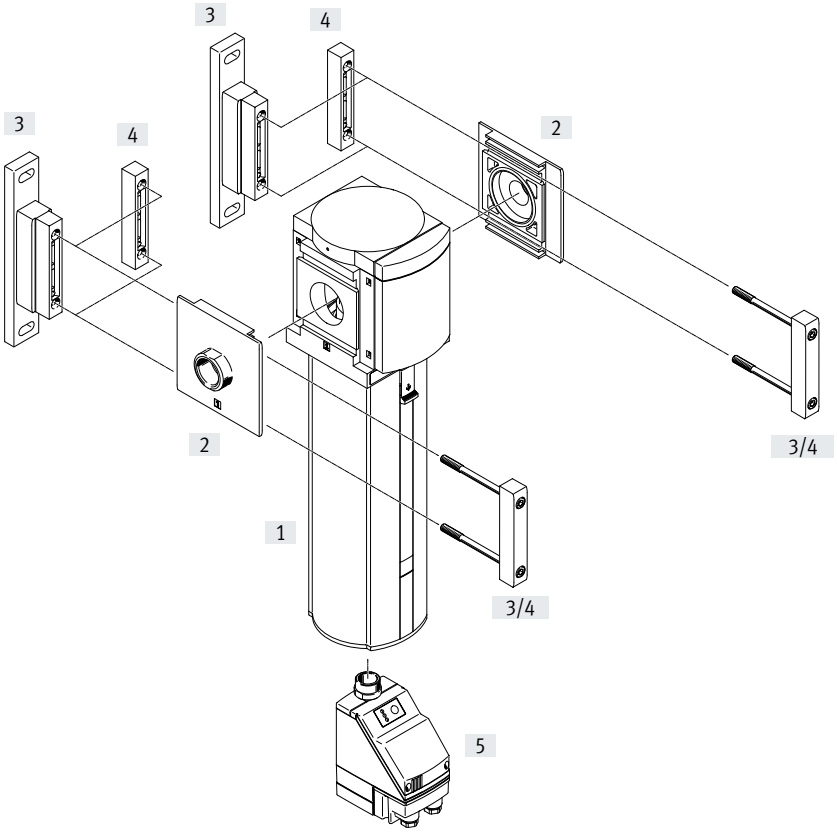

Note

Additional accessories:

- Module connector for combination with size MS9 ➔ internet: armv

Mounting attachments and accessories

		➔ Page/Internet
[1]	Fine and micro filter MS12-LFM	80
[2]	Connecting plate SET MS12-AG...	ms12-ag
[3]	Mounting bracket MS12-WP	ms12-wp
[4]	Module connector MS12-MV	ms12-mv
[5]	Fully automatic condensate drain, electrically actuated E2, E3, E4	85

Type codes

001	Series	
MS	MS series	

002	Size	
12	Grid dimension 124 mm	

003	Function	
LFM	Fine and micro filters	

004	Pneumatic connection	
AGF	Sub-base G1	
AGG	Connecting plate G1 1/4	
AGH	Connecting plate G1 1/2	
AGI	Sub-base G2	
G	Module without connecting thread, without sub-base	

005	Filter design	
A	0.01 µm	
B	1 µm	

006	Bowl type	
U	Aluminium	

007	Condensate drain	
E2	External fully automatic condensate drain, electric, 110 V AC, connection terminals	
E3	External fully automatic condensate drain, electric, 230 V AC, connection terminals	
E4	External fully automatic condensate drain, electric, 24 V DC, connection terminals	
M	Manual	
V	Fully automatic, normally open	
VC	Fully automatic, normally closed	

008	Filter change sensing	
	None	
DA	Differential pressure display, visual	

009	Type of mounting	
	Without mounting bracket	
WP	Mounting bracket basic design	

010	Flow direction	
	Flow direction from left to right	
Z	Flow direction from right to left	

Additional variants can be ordered using the modular product system → Page 86

- Pneumatic connection
- Condensate drain
- Filter change sensing
- Type of mounting
- Flow direction

Datasheet

Function
Condensate drain
Manual, rotating
Without differential pressure display

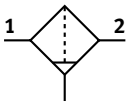

With differential pressure display

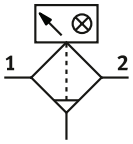

Condensate drain
Semi- or fully automatic
Without differential pressure display

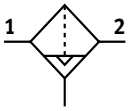

With differential pressure display

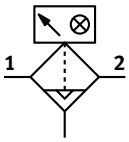

Flow rate
500 ... 50000 l/min

Temperature range
–10 ... +60 °C

Operating pressure
0.8 ... 20 bar

- High-efficiency filter for exceptionally clean compressed air
- Air quality to ISO 8573-1:2010
- Available with manual, fully automatic or fully automatic, electrically actuated condensate drain
- Available with optical differential pressure indicator for filter contamination
- Choice of filter inserts 0.01 µm or 1 µm
- New filter cartridges ➔ Page 95

General technical data		
Pneumatic connection 1, 2		
	Connecting plate AG...	G1, G1 1/4, G1 1/2 or G2
	Module without connecting thread/connecting plate G	–
Design		Fibre filter
Type of mounting		With accessories
		In-line installation
Mounting position		Vertical ±5°
Grade of filtration	[µm]	0.01 (micro filter MS12-LFM-A)
		1 (fine filter MS12-LFM-B)
Air purity class at the output		Compressed air to ISO 8573-1:2010 [1:7:2] (grade of filtration 0.01 µm, micro filter MS12-LFM-A)
		Compressed air to ISO 8573-1:2010 [5:7:3] (grade of filtration 1 µm, fine filter MS12-LFM-B)
Bowl guard		Integrated as metal bowl
Condensate drain		Manual, rotating
		Fully automatic
		Fully automatic, electrically actuated
Max. condensate volume	[ml]	400
Residual oil content	[mg/m³]	0.01 (micro filter MS12-LFM-A) 0.5 (fine filter MS12-LFM-B)
Filter efficiency, fine particles	[%]	99.995 (micro filter MS12-LFM-A) 99 (fine filter MS12-LFM-B)
Filter efficiency, oil aerosol	[%]	99 (micro filter MS12-LFM-A) 90 (fine filter MS12-LFM-B)
MPPS	[µm]	0.08 (micro filter MS12-LFM-A)
Filter efficiency MPPS	[%]	99.968 (micro filter MS12-LFM-A)
Vibration resistant		Transport application test with severity level 1 to FN 942017-4 and EN 60068-2-6 (fine filter MS12-LFM-B)
Shock resistance		Shock test with severity level 2 to FN 942017-5 and EN 60068-2-27 (fine filter MS12-LFM-B)

Note: This product conforms to ISO 1179-1 and ISO 228-1.

Datasheet

Standard flow rate qn [l/min]				
Operating pressure	4 bar	6 bar	10 bar	14 bar
Micro filter MS12-LFM-A				
Max. standard flow rate for air purity class $q_{n\ max}$	16670	23300	36670	50000
Min. standard flow rate for air purity class qn min	500	700	1100	1500
Fine filter MS12-LFM-B				
Max. standard flow rate for air purity class $q_{n\ max}$	16670	23300	36670	50000
Min. standard flow rate for air purity class qn min	625	950	1390	1675

A flow of 125 l/min is required to ensure trouble-free closing of the fully automatic condensate drain.

Operating and environmental conditions				
Condensate drain		Manual, rotating M	Fully automatic V	Fully automatic, electrically actuated E2, E3, E4
Operating pressure	[bar]	0.8 ... 20	2 ... 12	0.8 ... 16
Operating medium		Compressed air in accordance with ISO 8573-1:2010 [6:8:4]1)		
		Inert gases		
Note on the operating/pilot medium		–	Ester oil < 0.1mg/m³, according to ISO 8573-1:2010 [-:-:2]	–
Ambient temperature	[°C]	–10 ... +60	+5 ... +60	+1 ... +60
Temperature of medium	[°C]	–10 ... +60	+5 ... +60	+1 ... +60
Storage temperature	[°C]	–10 ... +60	–10 ... +60	+1 ... +60
Corrosion resistance class	CRC[2)]	2 - Moderate corrosion stress		

1) It is recommended to prefilter the compressed air for the micro filter MS-LFM-A using a fine filter MS-LFM-B (grade of filtration 1 µm).
2) More information: www.festo.com/x/topic/crc

Weight [g]	
Fine and micro filters with metal bowl U	7000
Fine and micro filters with metal bowl U and electrically actuated, fully automatic condensate drain E2, E3, E4	7700

Materials

Sectional view

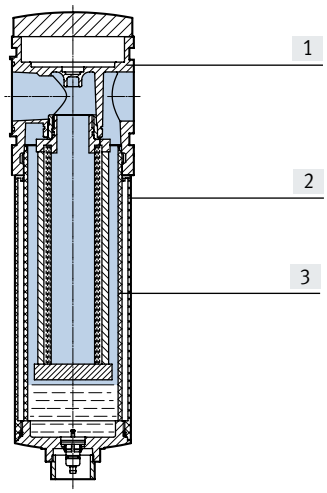

Fine and micro filter		
[1]	Housing	Die-cast aluminium
[2]	Metal bowl	Wrought aluminium alloy
	Inspection window	PC
[3]	Filter element	Borosilicate fibre
–	Seals	NBR
Note on materials		RoHs-compliant
LABS (PWIS) conformity		VDMA24364-B1/B2-L

Datasheet

Standard flow rate qn as a function of differential pressure p1-2

Grade of filtration 0.01 µm
With connecting plate MS12-AGF, pneumatic connection G1

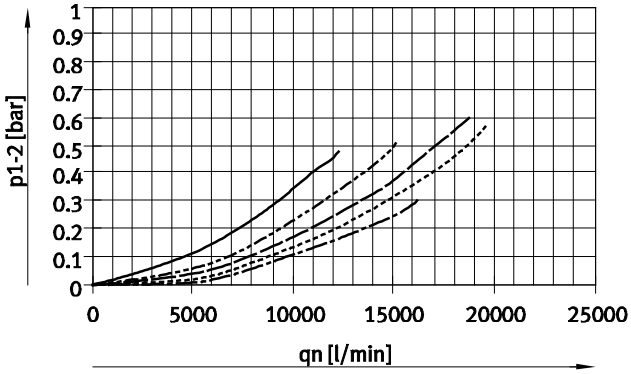

Grade of filtration 0.01 µm
With connecting plate MS12-AGG, pneumatic connection G1 1/4

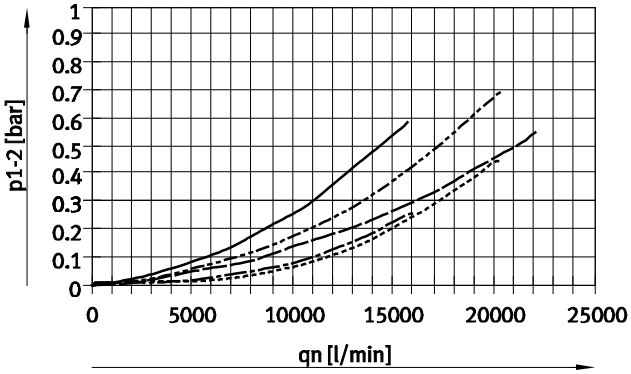

Grade of filtration 0.01 µm
With connecting plate MS12-AGH, pneumatic connection G1 1/2

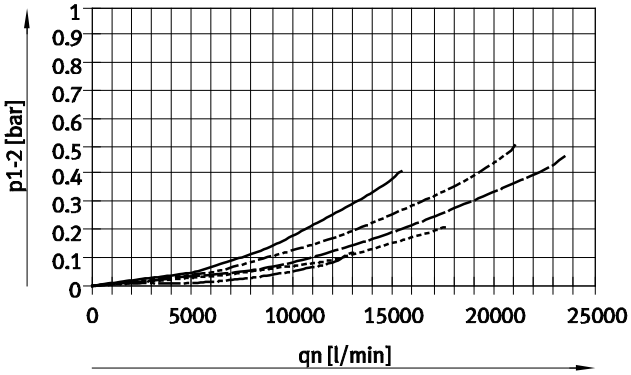

Grade of filtration 0.01 µm
With connecting plate MS12-AGI, pneumatic connection G2

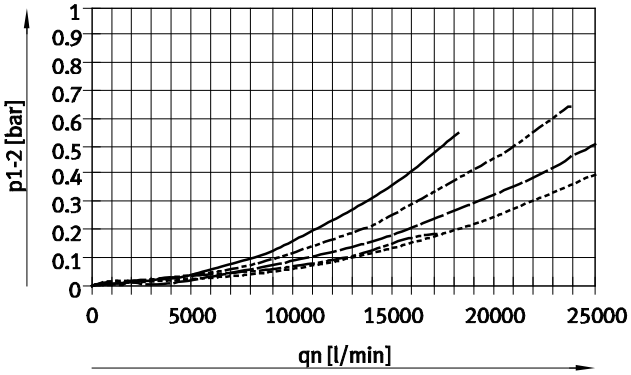

- p1: 4 bar
- p1: 6 bar
- p1: 8 bar
- p1: 10 bar
- p1: 12 bar

Datasheet

Standard flow rate qn as a function of differential pressure p1-2

Grade of filtration 1 µm
With connecting plate MS12-AGF, pneumatic connection G1

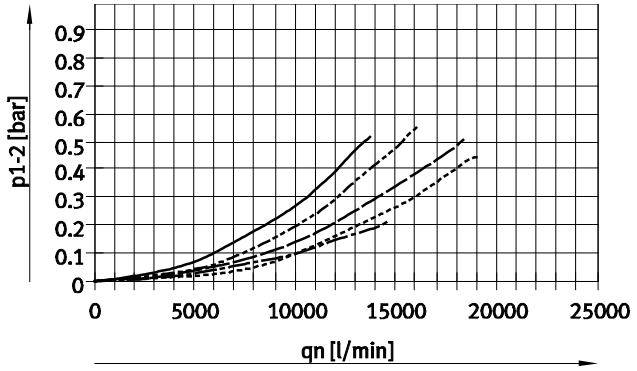

Grade of filtration 1 µm
With connecting plate MS12-AGG, pneumatic connection G1 1/4

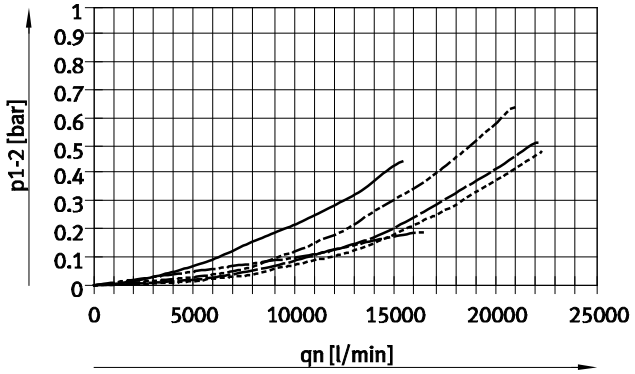

Grade of filtration 1 µm
With connecting plate MS12-AGH, pneumatic connection G1 1/2

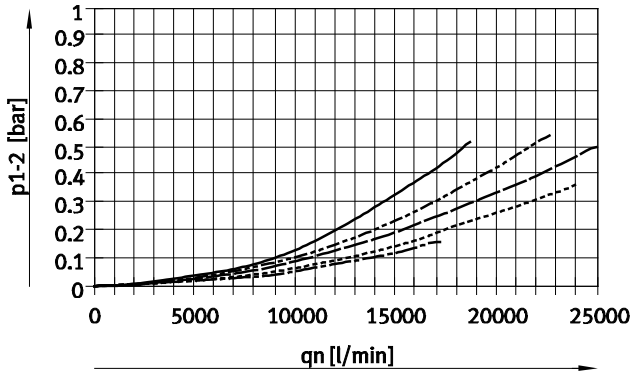

Grade of filtration 1 µm
With connecting plate MS12-AGI, pneumatic connection G2

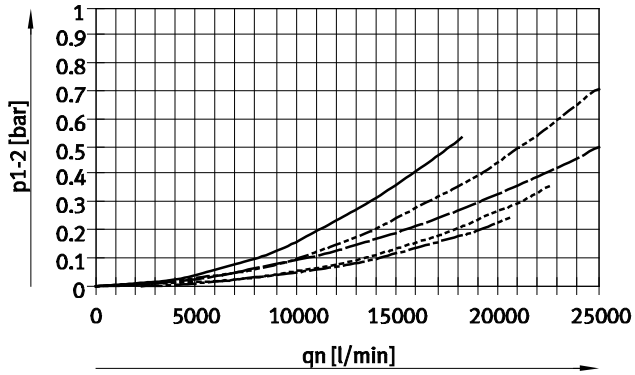

- p1: 4 bar
- p1: 6 bar
- p1: 8 bar
- p1: 10 bar
- p1: 12 bar

Datasheet

Dimensions – Basic version Download CAD data ➔ www.festo.com

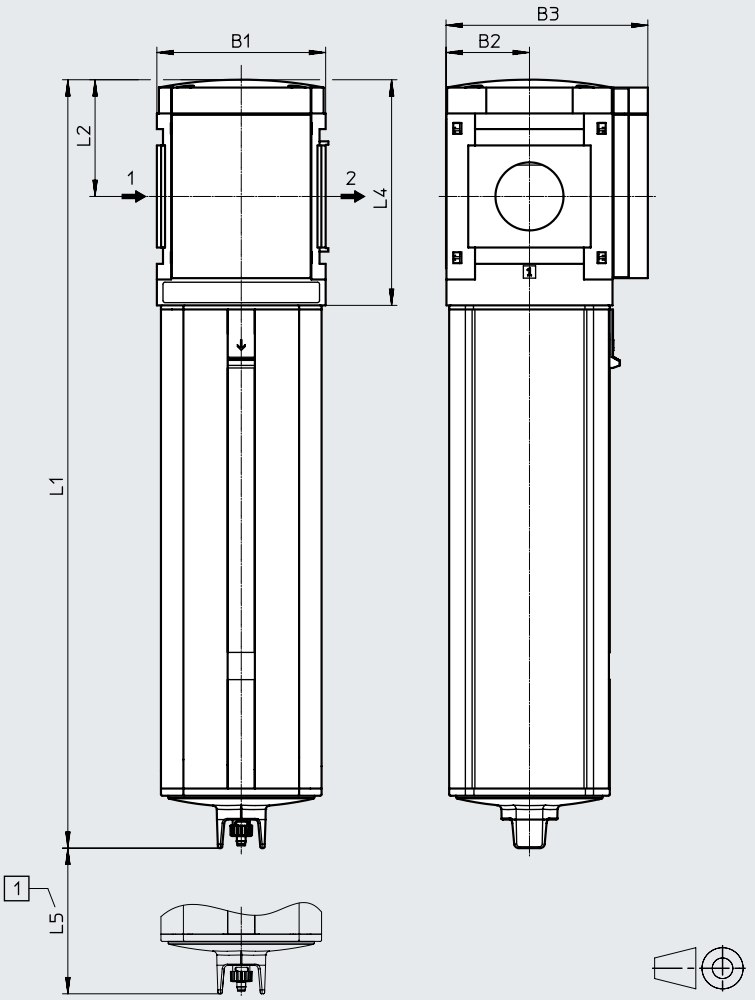

[1] Installation dimension

➔ Flow direction

Type	B1	B2	B3	L1	L2	L4	L5
MS12-LFM	124	61	148	565	86	166	350

Dimensions – Differential pressure display Download CAD data ➔ www.festo.com

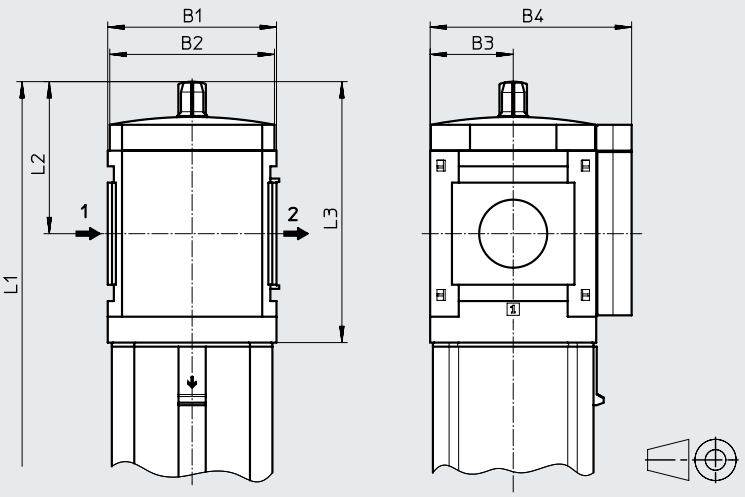

➔ Flow direction

Type	B1	B2	B3	B4	L1	L2	L3
MS12-LFM-...-DA	124	122	61	148	590	112	192

Datasheet

Dimensions – Condensate drain

Download CAD data ➔ www.festo.com

[M] Manual, rotating

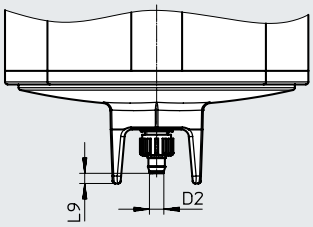

Barbed connector for plastic tubing PUN(-H)-8x1.25

[V] Fully automatic

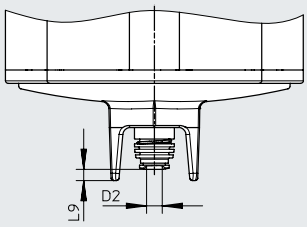

Push-in connector for plastic tubing PUN-6/PAN-6

[E2], [E3], [E4] Fully automatic, electrically actuated

Datasheets ➔ Internet: pwea

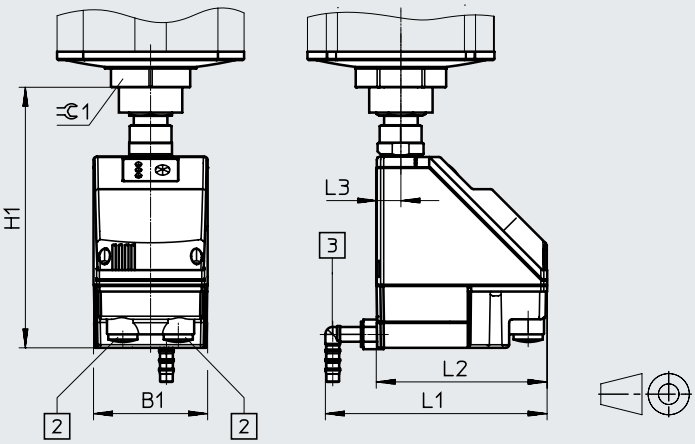

Condensate drain PWEA:

[2] Electrical connection: screw terminal PG9

[3] Connection can be rotated 360° for plastic tubing PUN-H-12x2

Type	B1	D2 ⌀	H1	L1	L2	L3	L9	⊂1
MS12-LFM-...-M	–	5.6	–	–	–	–	4	–
MS12-LFM-...-V	–	6.2	–	–	–	–	4.5	–
MS12-LFM-...-E2, E3, E4	72	–	164	140	108	15	–	50

Ordering data

Metal bowl

Size	Condensate drain	Connection	Micro filter Grade of filtration 0.01 µm		Fine filters Grade of filtration 1 µm	
			Part no.	Type	Part no.	Type
MS12	Fully automatic	G1 ... G2[1]	**537154**	**MS12-LFM-G-AUV**	**537153**	**MS12-LFM-G-BUV**

1) Connecting plate must be ordered separately as an accessory ➔ Internet: ms12-ag.

Note: This product conforms to ISO 1179-1 and ISO 228-1.

Ordering data – Modular product system

Ordering table					
Grid dimension [mm]		124	Conditions	Code	Enter code
Module no.		**535042**			
Series		Standard		**MS**	MS
Size		12		**12**	12
Function		Fine and micro filter		**-LFM**	-LFM
Pneumatic connection		Connecting plate G1		**-AGF**	
		Connecting plate G1 1/4		**-AGG**	
		Connecting plate G1 1/2		**-AGH**	
		Connecting plate G2		**-AGI**	
		Module without connecting thread, without connecting plate		**-G**	
Grade of filtration		1 µm		**-B**	
		0.01 µm		**-A**	
Bowl		Metal bowl		**-U**	-U
Condensate drain		Manual		**-M**	
		Fully automatic (P1 max. 12 bar) open without pressure		**-V**	
		Fully automatic (P1 max. 12 bar) closed without pressure		**-VC**	
	External, fully automatic, electric	115 V AC, connection terminals (P1 max. 16 bar)		**-E2**	
		230 V AC, connection terminals (P1 max. 16 bar)		**-E3**	
		24 V DC, connection terminals (P1 max. 16 bar)		**-E4**	
Filter change sensing		Differential pressure display, visual		**-DA**	
Type of mounting		Mounting bracket standard design	[1]	**-WP**	
Flow direction		Flow direction from right to left		**-Z**	

[1] WP Only with connecting plate AGF, AGG, AGH or AGI

Peripherals overview

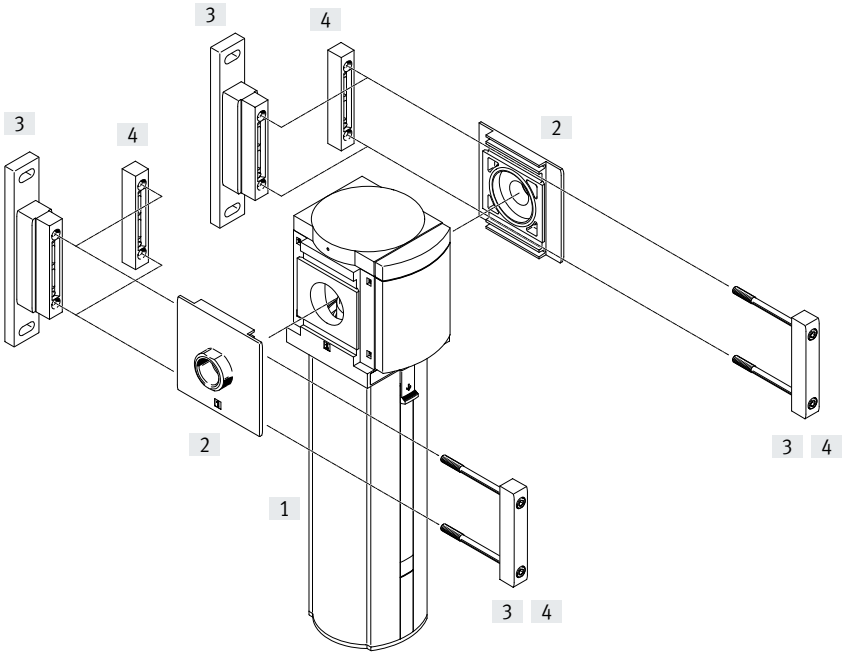

Note

Additional accessories:

- Module connector for combination with size MS9 ➔ internet: armv

Mounting attachments and accessories		➔ Page/Internet
[1]	Activated carbon filter MS12-LFX	89
[2]	Connecting plate SET MS12-AG...	ms12-ag
[3]	Mounting bracket MS12-WP	ms12-wp
[4]	Module connector MS12-MV	ms12-mv

Type codes

001	Series	
MS	MS series	

002	Size	
12	Grid dimension 124 mm	

003	Function	
LFX	Activated carbon filter	

004	Pneumatic connection	
AGF	Sub-base G1	
AGG	Sub-base G1 1/4	
AGH	Sub-base G1 1/2	
AGI	Sub-base G2	
G	Module without connecting thread, without sub-base	

005	Bowl type	
U	Aluminium	

006	Type of mounting	
	Without mounting bracket	
WP	Mounting bracket basic design	

007	Flow direction	
	Flow direction from left to right	
Z	Flow direction from right to left	

Additional variants can be ordered using the modular product system → Page 92

- Pneumatic connection
- Type of mounting
- Flow direction

Datasheet

Function

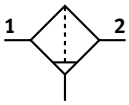

Flow rate
5065 ... 15190 l/min

Temperature range
–10 ... +60 °C

Operating pressure
0 ... 20 bar

- Removes liquid and gaseous oil particles from compressed air using activated carbon
- Eliminates odours and vapours
- Prefiltration with micro filter MS12-LFM-A (grade of filtration 0.01 µm) is recommended
- New filter cartridges ➔ Page 95

General technical data		
Pneumatic connection 1, 2		
	Connecting plate AG...	G1, G1 1/4, G1 1/2 or G2
	Module without connecting thread/connecting plate G	–
Design		Activated carbon filter
Type of mounting		With accessories
		In-line installation
Mounting position		Vertical ±5°
Air purity class at the output1)		Compressed air to ISO 8573-1:2010 [3:4:1]
Residual oil content	[mg/m³]	≤ 0.003

1) It is recommended to replace the filter cartridge with a new cartridge after 1000 operating hours (applicable for ambient temperature of 21 °C). The service life of the filter cartridges is reduced at higher temperatures.

Note: This product conforms to ISO 1179-1 and ISO 228-1.

Standard flow rate qn [l/min]				
Operating pressure	4 bar	6 bar	10 bar	14 bar
Max. standard flow rate for air purity class $q_{n\,max}$	5065	7090	11150	15190

Standard nominal flow rate q_n [l/min]				
Connecting plate	AGF	AGG	AGH	AGI
Standard nominal flow rate (standardised to DIN 1343)	4800	5000	5500	6000

Operating and environmental conditions		
Operating pressure	[bar]	0 ... 20
Operating medium		Compressed air to ISO 8573-1:2010 [3:4:2]
		Inert gases
Ambient temperature	[°C]	–10 ... +60
Temperature of medium	[°C]	+5 ... +30
Storage temperature	[°C]	–10 ... +60
Corrosion resistance class	CRC1)	2

1) More information: www.festo.com/x/topic/crc

Weight [g]	
Activated carbon filter with metal bowl guard U	7000

Datasheet

Materials

Sectional view

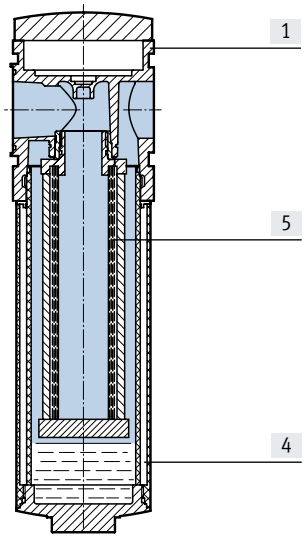

Activated carbon filter		
[1]	Housing	Die-cast aluminium
[4]	Metal bowl	Wrought aluminium alloy
	Inspection window	PC
[5]	Filter	Activated carbon
–	Seals	NBR
–	Connecting plate 1)	Wrought aluminium alloy
–	Mounting bracket 1)	Wrought aluminium alloy
–	Module connector 1)	Wrought aluminium alloy
Note on materials		RoHs-compliant
LABS (PWIS) conformity		VDMA24364-B1/B2-L

1) Modular product system

Standard flow rate qn as a function of differential pressure Δp1–2

With connecting plate MS12-AGF, pneumatic connection G1

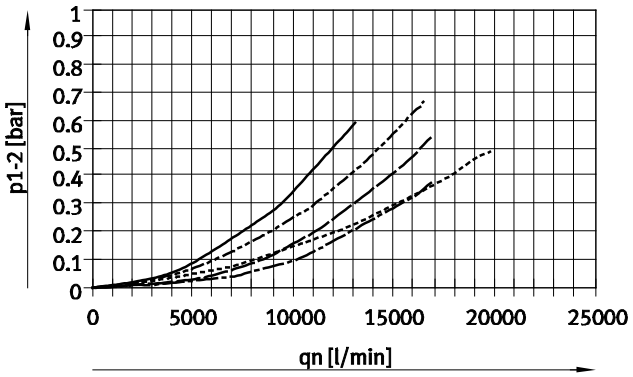

With connecting plate MS12-AGG, pneumatic connection G1 1/4

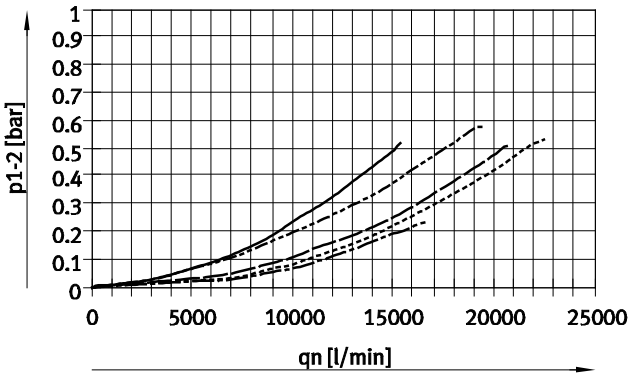

With connecting plate MS12-AGH, pneumatic connection G1 1/2

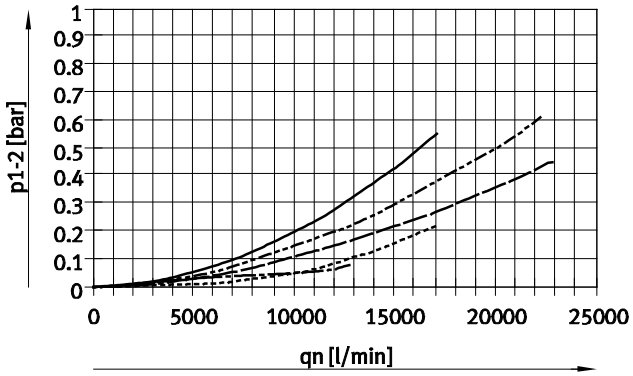

With connecting plate MS12-AGI, pneumatic connection G2

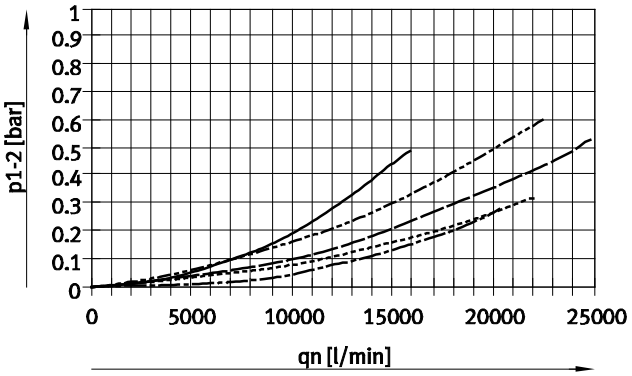

- p1: 4 bar
- p1: 6 bar
- p1: 8 bar
- p1: 10 bar
- p1: 12 bar

Datasheet

Dimensions – Basic version Download CAD data ➔ www.festo.com

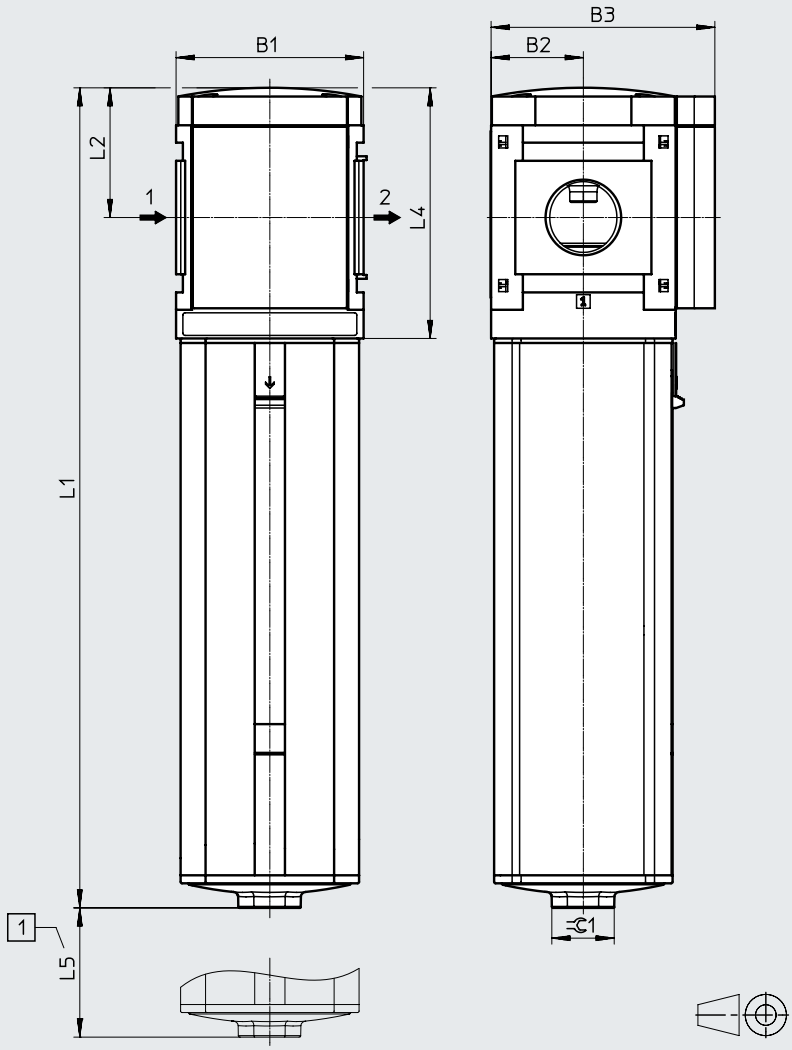

[1] Installation dimension

➔ Flow direction

Type	B1	B2	B3	L1	L2	L4	L5	⊂ 1
MS12-LFX	124	61	148	542	86	166	350	36

Ordering data

Metal bowl

Size	Connection	Part no.	Type
MS12	G1 ... G2[1)]	**537155**	**MS12-LFX-G-U**

1) Connecting plate must be ordered separately as an accessory a Internet: ms12-ag

Note: This product conforms to ISO 1179-1 and ISO 228-1.

Ordering data – Modular product system

Ordering table					
Grid dimension [mm]	124	Conditions	Code		Enter code
Module no.	**535043**				
Series	Standard		**MS**		MS
Size	12		**12**		12
Function	Activated carbon filter		**-LFX**		-LFX
Pneumatic connection	Connecting plate G1		**-AGF**		
	Connecting plate G1 1/4		**-AGG**		
	Connecting plate G1 1/2		**-AGH**		
	Connecting plate G2		**-AGI**		
	Module without connecting thread, without connecting plate		**-G**		
Bowl	Metal bowl		**-U**		-U
Type of mounting	Mounting bracket standard design	[1]	**-WP**		
Flow direction	Flow direction from right to left		**-Z**		

[1] WP Only with connecting plate AGF, AGG, AGH or AGI

Accessories

Filter cartridges, MS4/MS6 series

MS-...-LFM

MS-...-LFP

MS-...-LFX

Ordering data						
Size	Filter cartridge	Grade of filtration [µm]	Information on materials - Filter	CRC[1]	Part no.	Type
MS4	Micro filter cartridge	0.01	–	–	**162674**	**MS4/D-MINI-LFM-A[2]**
	Fine filter cartridge	1	–	–	**162677**	**MS4/D-MINI-LFM-B[2]**
	Filter cartridge (colour: blue)	5	PE	2	**534501**	**MS4-LFP-C**
	Filter cartridge (colour: white)	40	PE	2	**534502**	**MS4-LFP-E**
	Activated carbon filter cartridge	–	Activated carbon	–	**532912**	**MS4/D-MINI-LFX**
MS6	Micro filter cartridge	0.01	–	–	**532909**	**MS6-LFM-A**
	Fine filter cartridge	1	–	–	**532910**	**MS6-LFM-B**
	Filter cartridge (colour: blue)	5	PE	2	**534499**	**MS6-LFP-C**
	Filter cartridge (colour: white)	40	PE	2	**534500**	**MS6-LFP-E**
	Activated carbon filter cartridge	–	Activated carbon	–	**532911**	**MS6-LFX**
MS4-...-B	Filter cartridge (colour: blue)	5	PE	2	**8129064**	**MS4-LFP1-C**
	Filter cartridge (colour: white)	40	PE	2	**8129062**	**MS4-LFP1-E**
MS6-...-B	Filter cartridge (colour: blue)	5	PE	2	**8129063**	**MS6-LFP1-C**
	Filter cartridge (colour: white)	40	PE	2	**8129061**	**MS6-LFP1-E**
High flow rate HF						
MS6	Micro filter cartridge	0.01	Borosilicate fibre	2	**552093**	**MS6-LFM-A-HF**
	Fine filter cartridge	1	Borosilicate fibre	2	**552092**	**MS6-LFM-B-HF**
	Activated carbon filter cartridge	–	Activated carbon	2	**552094**	**MS6-LFX-HF[2]**
Application area HP, suitable for sealing air and purge air						
MS6	Micro filter cartridge	0.01	Borosilicate fibre	2	**547922**	**MS6-LFM-AI[2]**
	Fine filter cartridge	1	Borosilicate fibre	2	**547923**	**MS6-LFM-BI[2]**
	Activated carbon filter cartridge	–	Activated carbon	2	**547925**	**MS6-LFX-AKI[2]**

1) More information www.festo.com/x/topic/crc
2) RoHs-compliant

Accessories

Filter cartridges, MS9 series

MS-9-LFM

MS-9-LFX

Ordering data						
Size	Filter cartridge	Grade of filtration [µm]	Information on materials - filter	CRC[1]	Part no.	Type
MS9	Micro filter cartridge	0.01	Borosilicate fibre	2	**553036**	**MS9-LFM-A**
	Fine filter cartridge	1	Borosilicate fibre	2	**553037**	**MS9-LFM-B**
	Filter cartridge	5	PE	2	**570309**	**MS9-LFP-C[2]**
	Filter cartridge	40	PE	2	**570310**	**MS9-LFP-E[2]**
	Activated carbon filter cartridge	–	Activated carbon	2	**552946**	**MS9-LFX**
High flow rate HF						
MS9	Micro filter cartridge	0.01	Borosilicate fibre	2	**552944**	**MS9-LFM-A-HF[3]**
	Fine filter cartridge	1	Borosilicate fibre	2	**552945**	**MS9-LFM-B-HF[3]**

1) More information www.festo.com/x/topic/crc
2) RoHs-compliant
3) LABS (PWIS) conformity: VDMA24364-B1/B2-L

Accessories

Filter cartridges, MS12 series

MS-12-LFM-B

MS-12-LFM-A

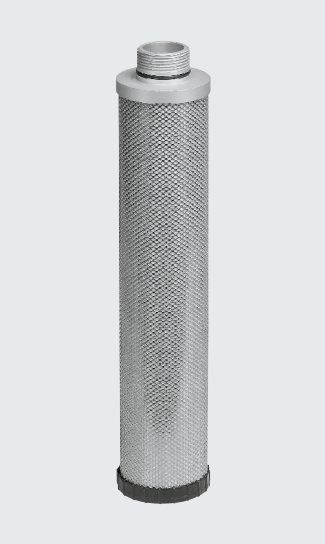

MS-12-LFX

Ordering data

Size	Filter cartridge	Grade of filtration [µm]	Information on materials - filter	CRC[1]	Weight [g]	Part no.	Type
MS12	Micro filter cartridge	0.01	Borosilicate fibre	2	425	**537146**	**MS12-LFM-A[2]**
	Fine filter cartridge	1	Borosilicate fibre	2	395	**537145**	**MS12-LFM-B[2]**
	Filter cartridge	5	Sintered bronze	2	295	**537143**	**MS12-LFP-C**
	Filter cartridge	40	Sintered bronze	2	295	**537144**	**MS12-LFP-E**
	Activated carbon filter cartridge	–	Activated carbon	2	445	**537147**	**MS12-LFX[2]**

1) More information www.festo.com/x/topic/crc
2) RoHs-compliant