Pressure regulator MS-LR-B

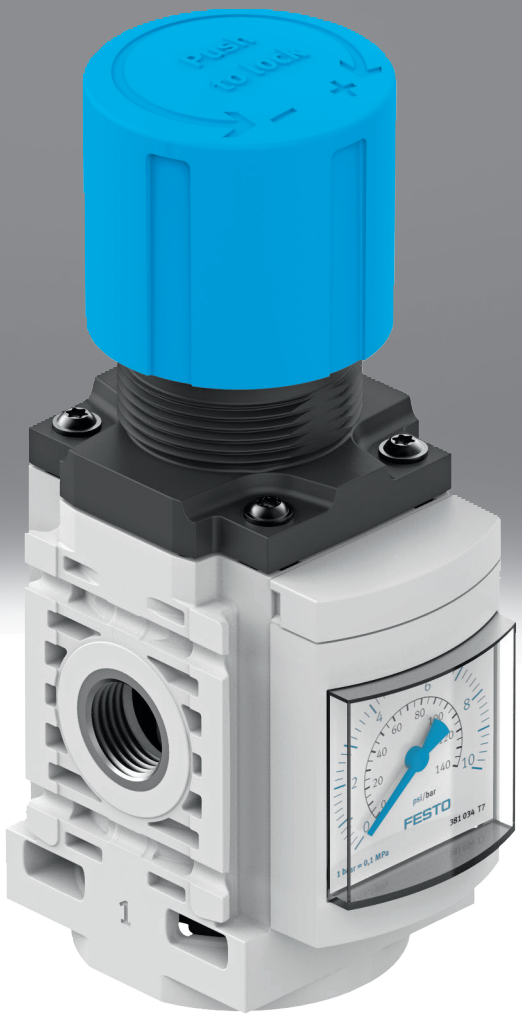

Characteristics

At a glance

- Very compact and extremely lightweight series for use close to the process directly in the machine.
- Stable control response
- The rotary knob locks into place to prevent unintentional rotation
- Integrated secondary exhaust and primary exhaust with return flow function

Diagrams

Link ms-lr-b

The diagrams shown in this document are also available online. These can be used to display precise values.

Function

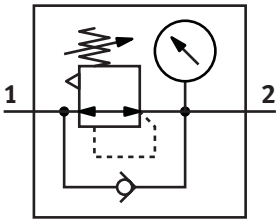

For stepless, precise adjustment of the required operating pressure
The pressure regulator keeps the working pressure largely constant, irrespective of compressed air fluctuations in the network and due to air consumption

Pneumatic connection

Depending on the size, different connection types can be selected:
- Individual fittings that are fastened via a female thread
- Built-in connections into which the tubing can be directly inserted

Pressure regulation range

The following ranges can be set:
- With MS2-...: 0.5 ... 7 bar
- With MS4-... and MS6-...: 0.3 ... 7 bar

Pressure gauge alternatives

The pressure regulator can be ordered with or without a pressure gauge. The interface has a thread of G1/8.

[A8] Adapter for EN pressure gauge 1/8, without pressure gauge

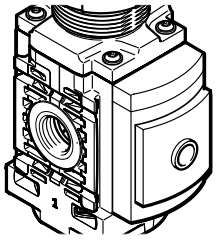

With female thread G1/8 for connecting a pressure gauge.

[AD13] Pressure sensor (SPAN-B) with LCD display, cable 2.5 m OE, 4-pin, PNP, NPN

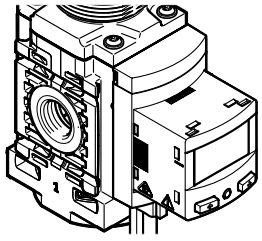

The optional pressure sensor SPAN-B is suitable for monitoring compressed air and non-corrosive gases. The measuring method is based on a piezoresistive measuring cell for relative pressure measurement. The pressure value is transmitted to the connected controller as a switching signal, as an analogue signal or via IO-Link® depending on the sensor variant and selected parameters.

Characteristics

[AG] MS pressure gauge

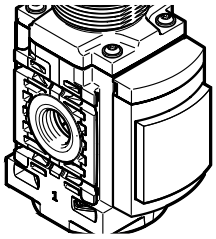

With integrated pressure gauge for sizes 4 and 6.

[AR] With pressure gauge

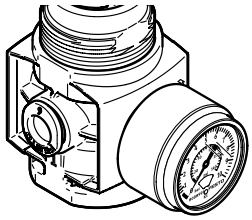

With screwed-in pressure gauge PAGN for size 2.

Alternative pressure gauge scale

The scaling of the built-in pressure gauge can be selected. The unit options available are [MPa], [bar] / [psi].

Version

[B] Second generation

Basic component with sturdy and lightweight polymer housing. Fully compatible with the MS series.

Type code

001	Series	
MS	MS series	

002	Size	
2	Grid dimension 25 mm	
4	Grid dimension 40 mm	
6	Grid dimension 62 mm	

003	Function	
LR	Pressure regulator	

004	Pneumatic connection	
1/4	Female thread G1/4	
1/2	Female thread G1/2	
M5	Female thread M5	
QS6	Push-in connector 6 mm	

005	Pressure regulation range	
D6	0.3 ... 7 bar	

006	Pressure gauge alternatives	
A8	Adapter for EN pressure gauge 1/8, without pressure gauge	
AD13	Pressure sensor (SPAN-B) with LCD display, cable 2.5 m OE, 4-pin, PNP, NPN	
AG	MS pressure gauge	
AR	With pressure gauge	

007	Alternative pressure gauge scale	
	MS pressure gauge	
BAR	bar	
MPA	MPa	

008	Special material properties	
	None	
F1A	Recommended for production plants for manufacturing lithium-ion batteries, F1A	

009	Version	
B	Second generation	

Datasheet

General technical data			
Size	2	4	6
Pneumatic connection, port 1	M5, QS-6	G1/4	G1/2
Pneumatic connection, port 2	M5, QS-6	G1/4	G1/2
Standard nominal flow rate (standardised to DIN 1343)	170 ... 350 l/min	1,800 l/min	6,000 l/min
Pressure regulation range	0.05 ... 0.7 MPa	0.03 ... 0.7 MPa	
Pressure regulation range	0.5 ... 7 bar	0.3 ... 7 bar	
Pressure regulation range	7.25 ... 101.5 psi	4.35 ... 101.5 psi	
Max. pressure hysteresis	0.025 MPa	0.05 MPa	0.035 MPa
Max. pressure hysteresis	0.25 bar	0.5 bar	0.35 bar
Max. pressure hysteresis	3.625 psi	7.25 psi	5.075 psi
Design	Directly actuated diaphragm regulator	Pressure regulator with pressure gauge, Pressure regulator without pressure gauge, Directly actuated piston regulator	
Controller function	Output pressure constant, With secondary exhausting, With return flow function		
Type of mounting	Either:, Front panel mounting, Inline installation, With accessories		
Mounting position	Any		
Actuator lock	Rotary knob with detent		
Pressure gauge (ANALOG) or Pressure display (DIGITAL)	Prepared for G1/8, With pressure gauge		

Operating and environmental conditions				
Size	2		4	6
Pneumatic connection, port 1	M5	QS-6	G1/4	G1/2
Operating pressure	0.1 ... 1 MPa	0.1 ... 0.8 MPa	0.1 ... 1 MPa	
Operating pressure	1 ... 10 bar	1 ... 8 bar	1 ... 10 bar	
Operating pressure	14.5 ... 145 psi	14.5 ... 116 psi	14.5 ... 145 psi	15 ... 145 psi
Operating medium	Compressed air to ISO 8573-1:2010 [7:4:4], Inert gas			
Note on operating and pilot medium	–		Lubricated operation possible (in which case lubricated operation will always be required)	
Ambient temperature	-5 ... 50°C			
Media temperature	-5 ... 50°C			
Storage temperature	-5 ... 50°C			
Corrosion resistance class CRC [1]	1 - Low corrosion stress			

1) Corrosion resistance class CRC 1 to Festo standard FN 940070.
Low corrosion stress. Dry indoor use or transport and storage protection. Also applies to parts behind covers, in the non-visible interior area, or parts that are covered in the application (e.g. drive pins).

Materials			
Size	2	4	6
Material housing	Reinforced PA		
Material rotary knob	POM		
Material valve stem	Wrought aluminium alloy, NBR	POM	
Material membrane	NBR	–	
Material spring	High-alloy steel	High-alloy steel, Galvanised steel	
Note on materials	RoHS compliant		
LABS (PWIS) conformity	VDMA24364-B1/B2-L		
Cleanroom suitability, measured according to ISO 14644-14	Class 6 according to ISO 14644-1	Class 7 according to ISO 14644-1	

Additional material specifications – products for battery production (F1A)	
Suitability for the production of Li-ion batteries[1]	Suitable for battery production with reduced Cu/Zn/Ni values (F1a)
Cleanroom suitability, measured according to ISO 14644-14[2]	Class 6 according to ISO 14644-1, Class 7 according to ISO 14644-1

1) Only valid for MS2-...-F1A-B
2) Only valid for MS2-...-F1A-B

Datasheet

Standard flow rate qn as a function of output pressure p2 (p1 = 8 bar) – MS2-LR-QS6-B

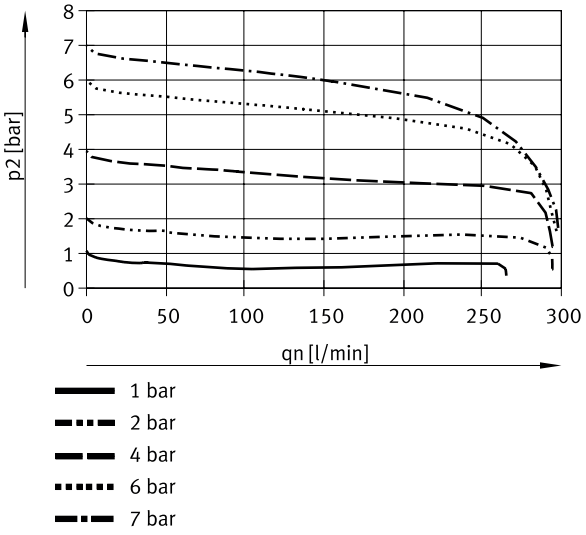

Standard flow rate qn as a function of output pressure p2 (p1 = 10 bar) – MS2-LR-M5-B

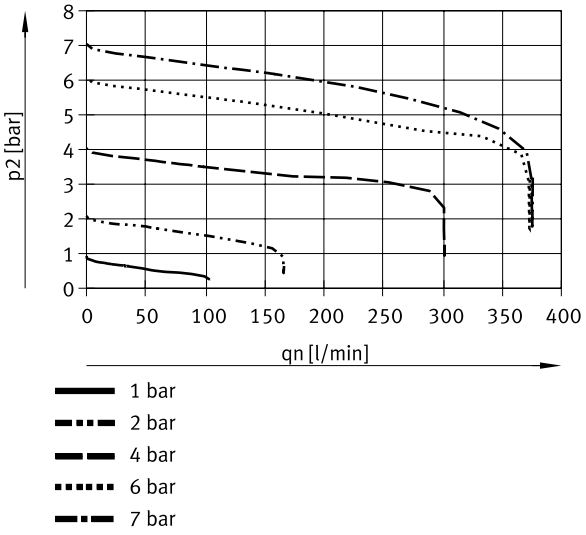

Datasheet

Standard flow rate qn as a function of output pressure p2 (p1 = 8 bar) – MS4-LR-..-B

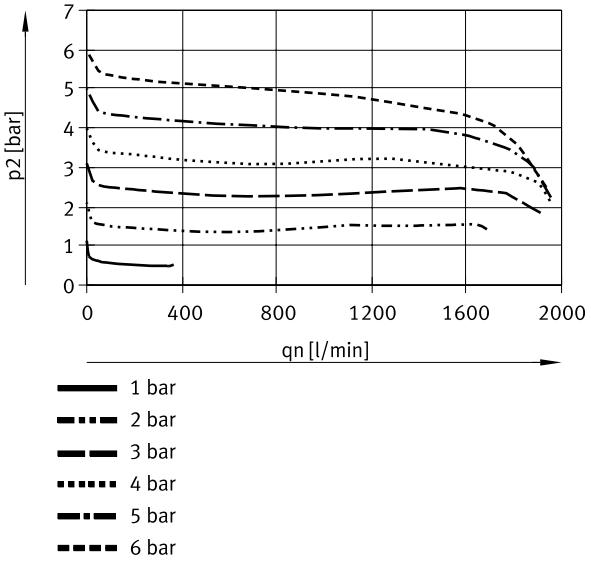

Standard flow rate qn as a function of output pressure p2 (p1 = 10 bar) – MS4-LR-..-B

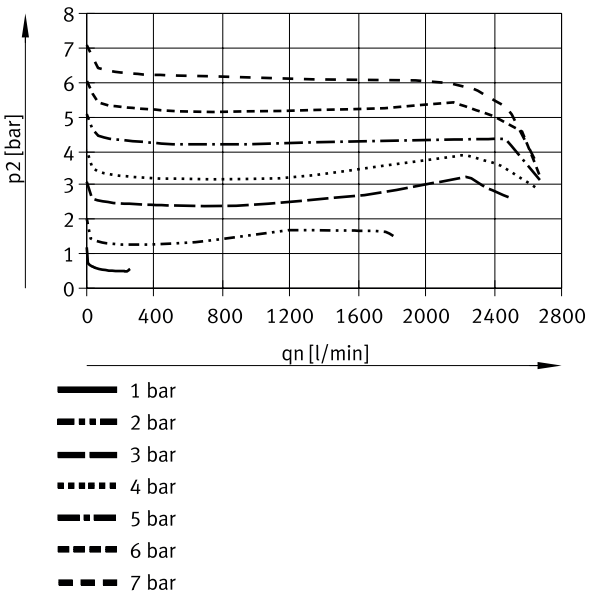

Datasheet

Standard flow rate qn as a function of output pressure p2 (p1 = 8 bar) – MS6-LR-..-B

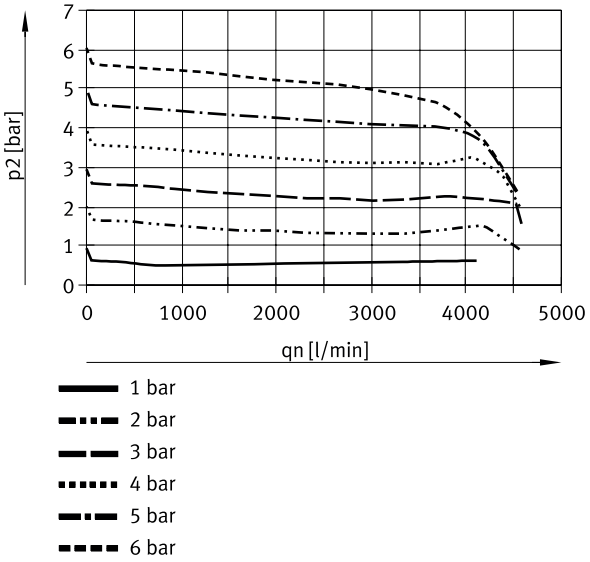

Standard flow rate qn as a function of output pressure p2 (p1 = 10 bar) – MS6-LR-..-B

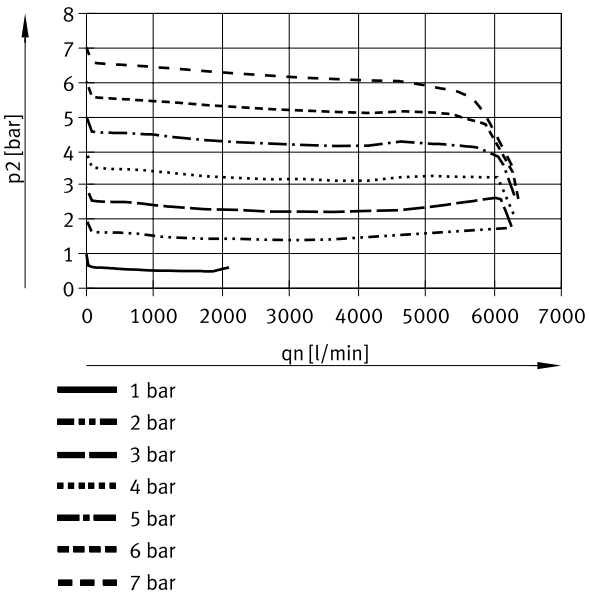

Dimensions

Dimensions – MS2-LR with pressure gauge Download CAD data www.festo.com

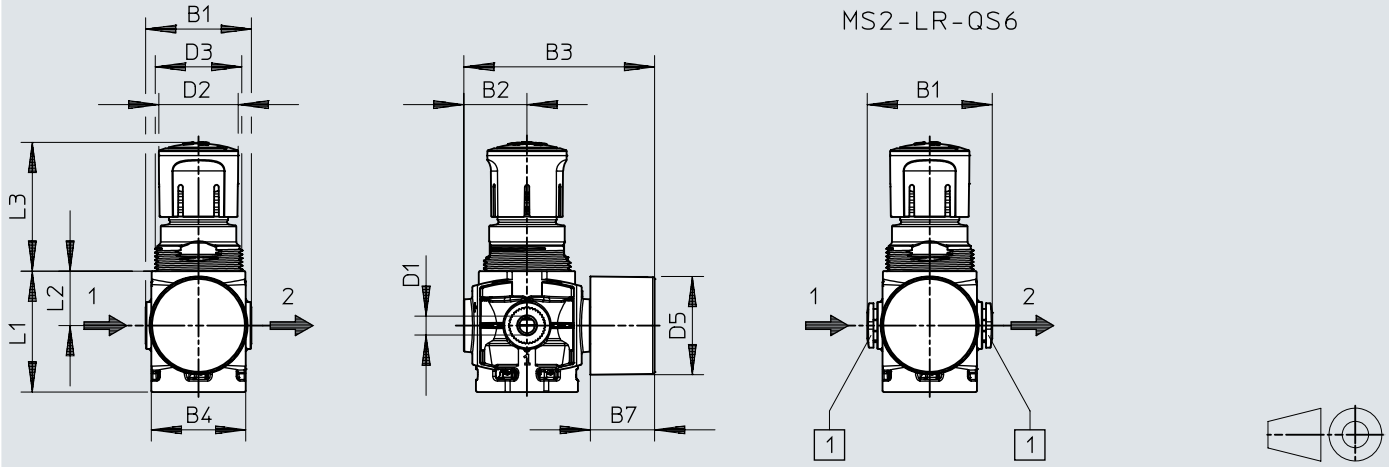

[1] Pneumatic connection QS-6

	B1	B2	B3	B4	B7	D1	D2 Ø	D3 Ø	D5 Ø	L1	L2	L3
MS2-LR-M5-...-AR	28	16,7	51	25	17	M5	21	M23x1	26	31	14,4	34,1
MS2-LR-QS6-...-AR	33,1					QS-6						

Dimensions

Dimensions – MS2-LR adapter for EN pressure gauge 1/8, without pressure gauge

Download CAD data www.festo.com

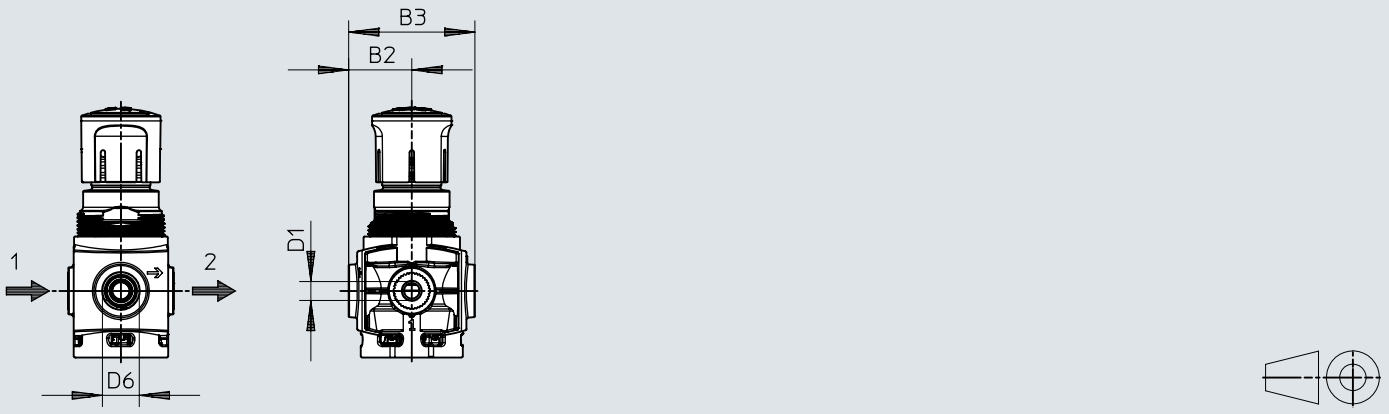

	B2	B3	D1	D6
MS2-LR-M5-...-A8	16,7	33,4	M5	G1/8
MS2-LR-QS6-...-A8			QS-6	

Dimensions

Dimensions – MS4-LR with pressure gauge Download CAD data www.festo.com

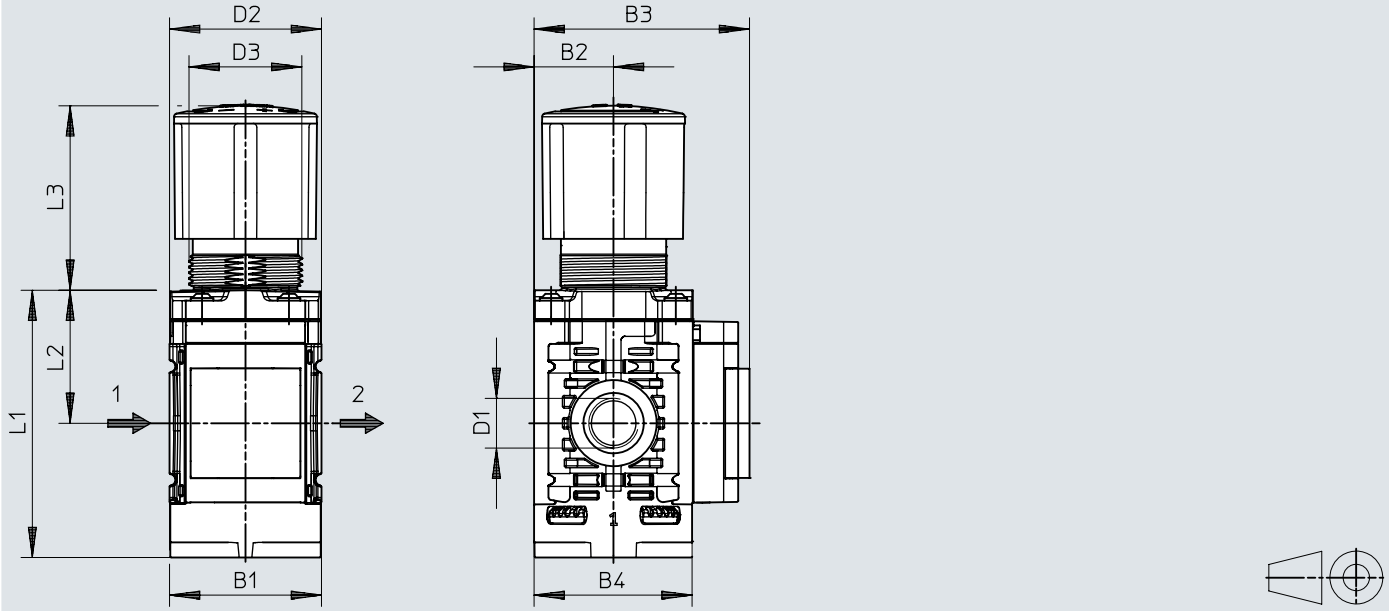

	B1	B2	B3	B4	D1	D2 Ø	D3	L1	L2	L3
MS4-LR-1/4-...-AG	40,2	21	57	41,8	G1/4	37,8	M30x1,5	70,7	35,2	48,8

Dimensions

Dimensions – MS4-LR adapter for EN pressure gauge 1/8, without pressure gauge

Download CAD data www.festo.com

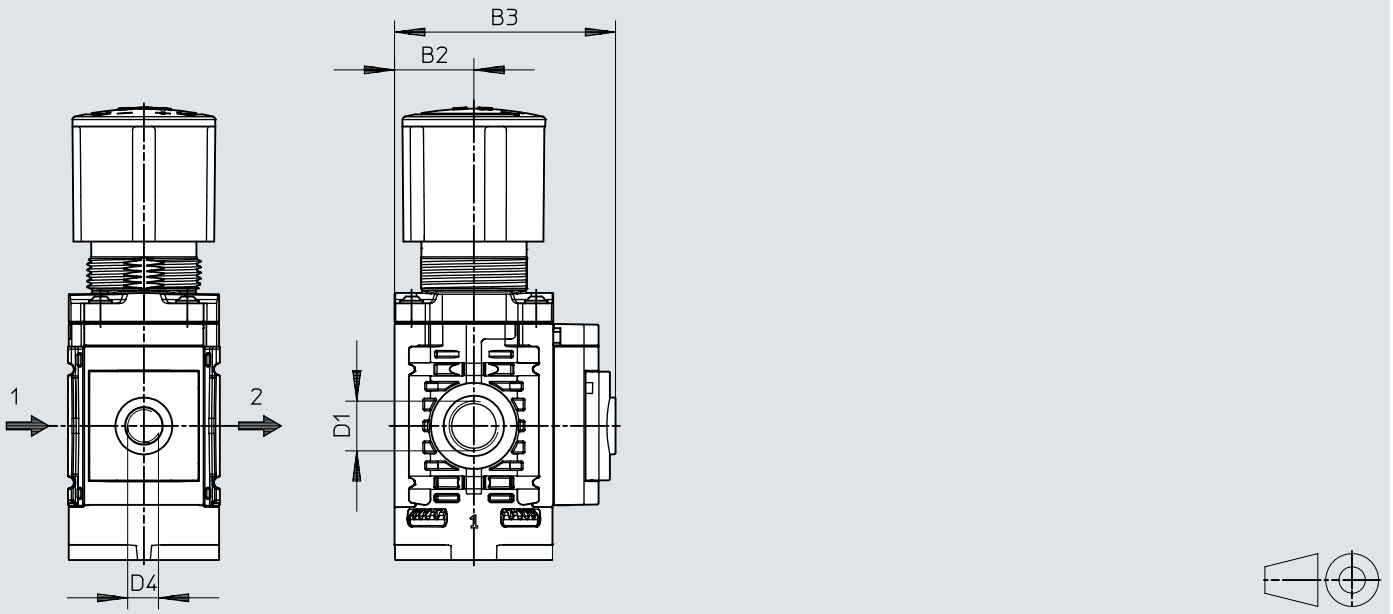

	B2	B3	D1	D4
MS4-LR-1/4-...-A8	21	58,5	G1/4	G1/8

Dimensions

Dimensions – MS4-LR with pressure sensor SPAN-B Download CAD data www.festo.com

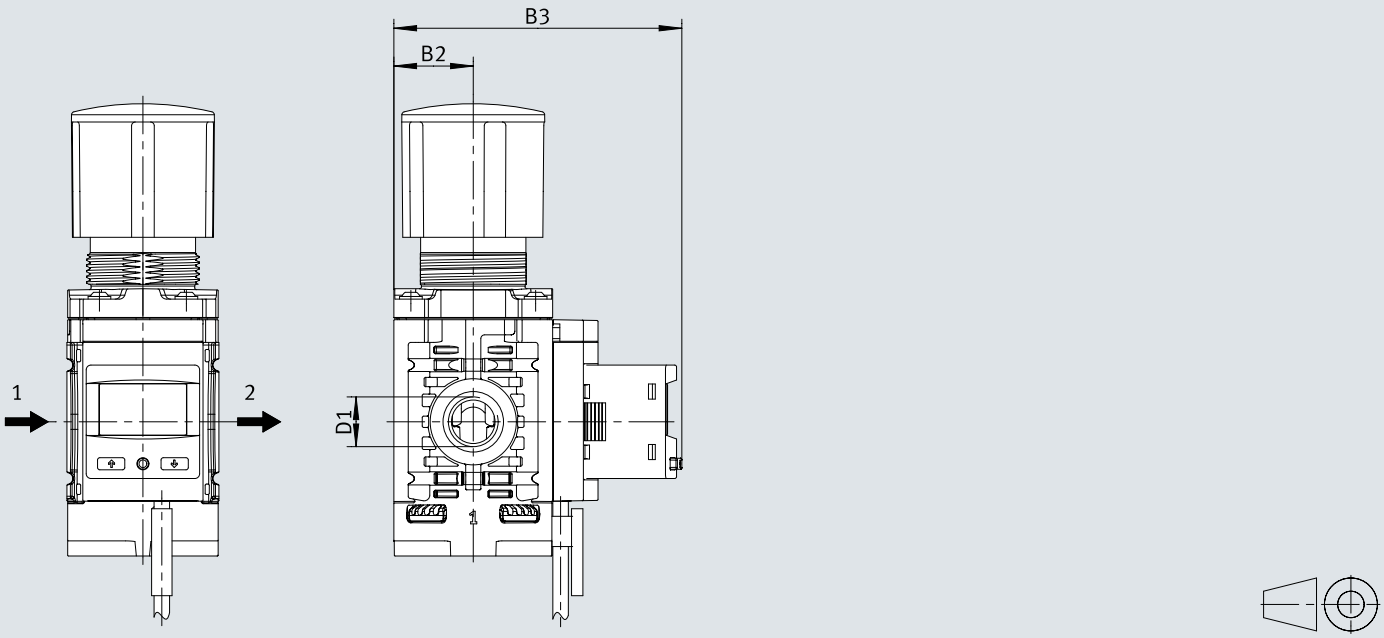

	B2	B3	D1
MS4-LR-1/4-...-AD13-B	21	76,2	G1/4

Dimensions

Dimensions – MS6-LR with pressure gauge Download CAD data www.festo.com

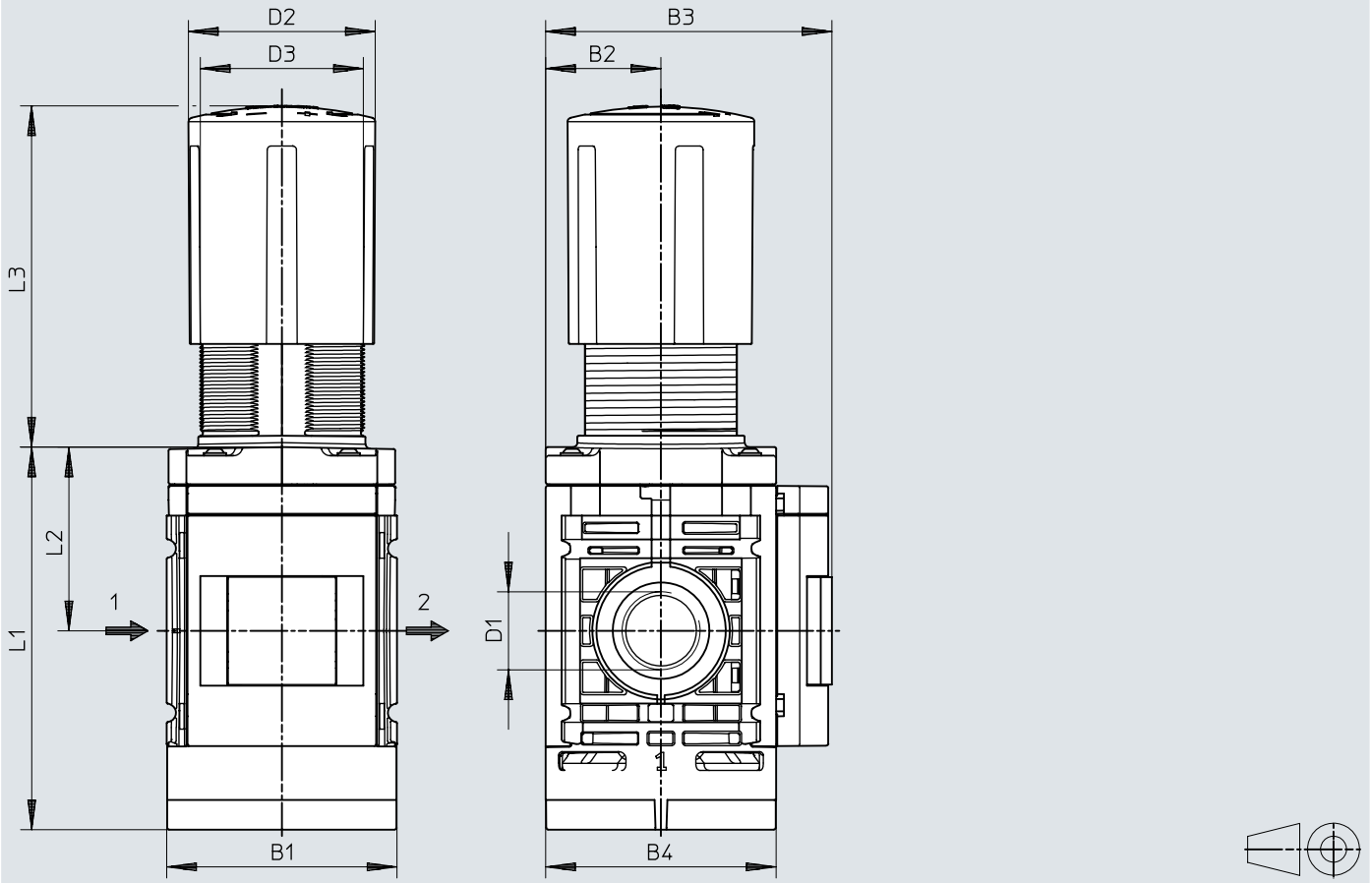

	B1	B2	B3	B4	D1	D2 Ø	D3	L1	L2	L3
MS6-LR-1/2-...-AG	62	31	77	62	G1/2	50,2	43,9	102,9	49,4	91,8

Dimensions

Dimensions – MS6-LR adapter for EN pressure gauge 1/8, without pressure gauge

Download CAD data www.festo.com

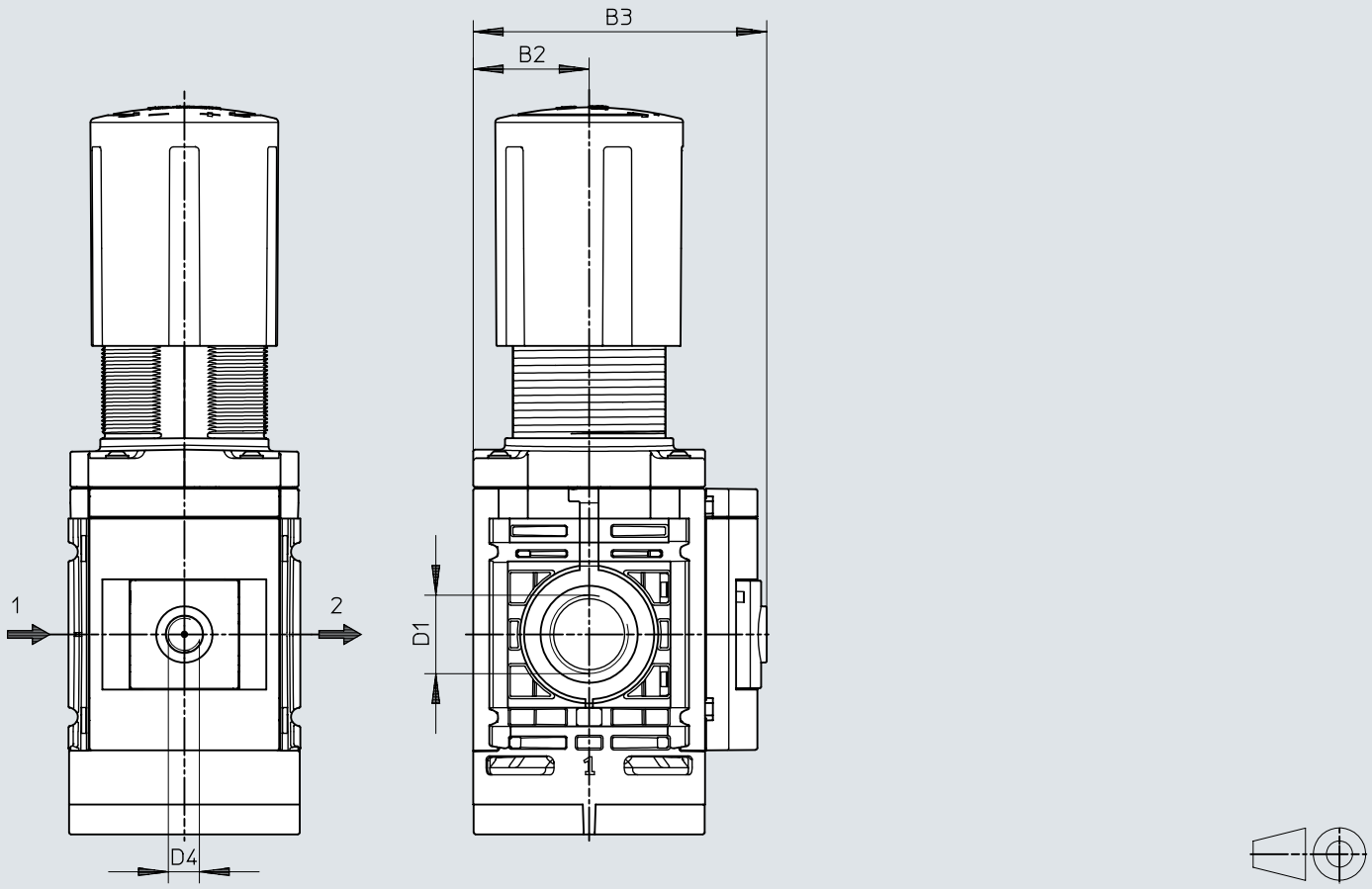

	B2	B3	D1	D4
MS6-LR-1/2-...-A8	31	78,5	G1/2	G1/8

Dimensions

Dimensions – MS6-LR with pressure sensor SPAN-B Download CAD data www.festo.com

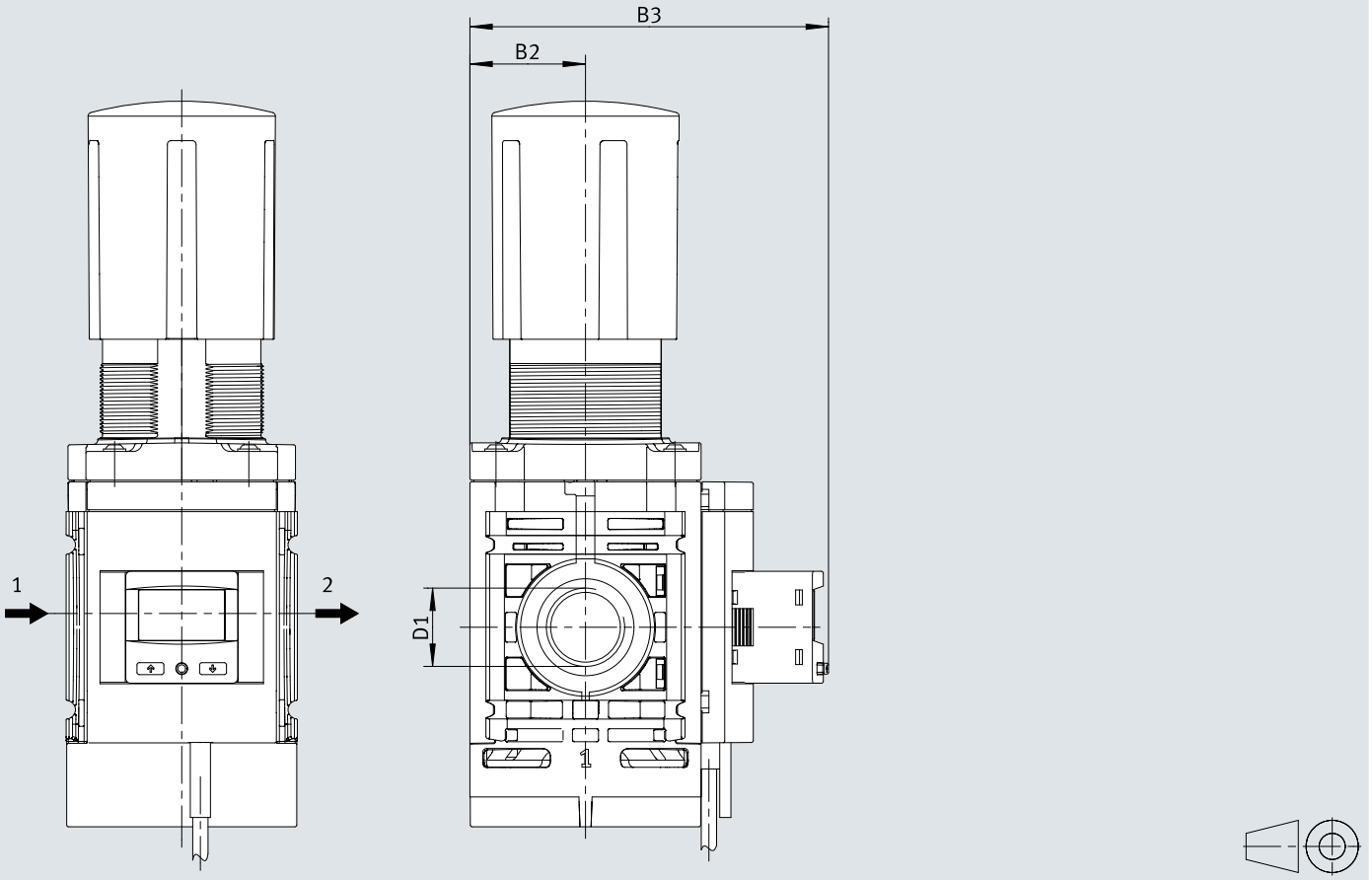

	B2	B3	D1
MS6-LR-1/2-...-AD13-B	31	96,2	G1/2

Dimensions

Dimensions – Mounting bracket MS...-WR-B Download CAD data www.festo.com

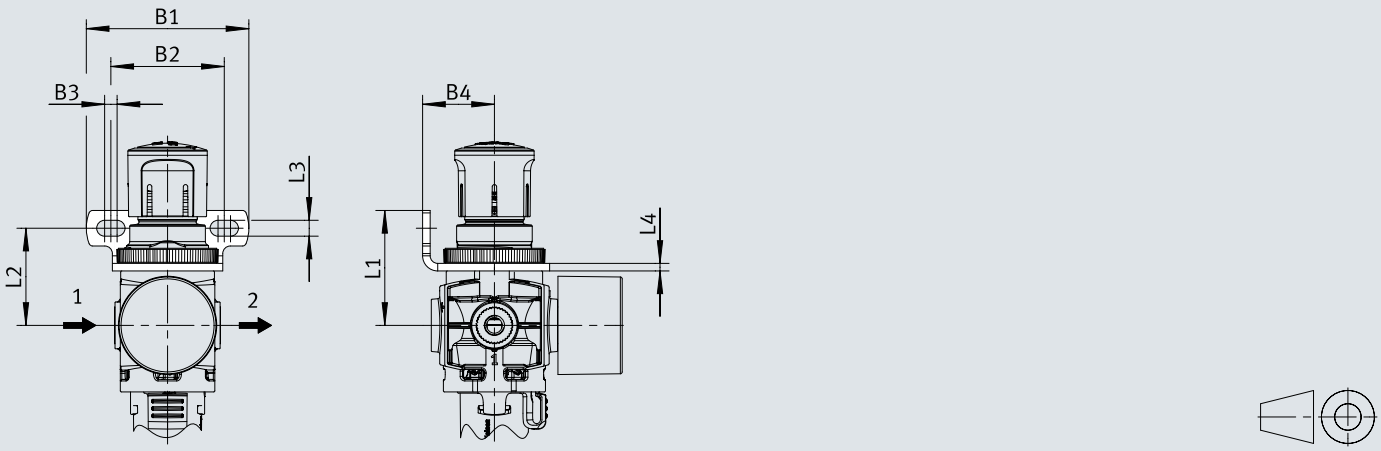

	B1 ±0,2	B2	B3	B4	L1	L2	L3 ±0,1	L4
MS2-WR-B	43	30	3,3	19	30,4	25,7	4,2	2
MS4-WR-B	68	38	14	40	52	44	7	2,5
MS6-WR-B	70	38,2	14,2	40	67	57	7,1	3

Dimensions

Dimensions – Wall mounting kit MS...-WPE-B Download CAD data www.festo.com

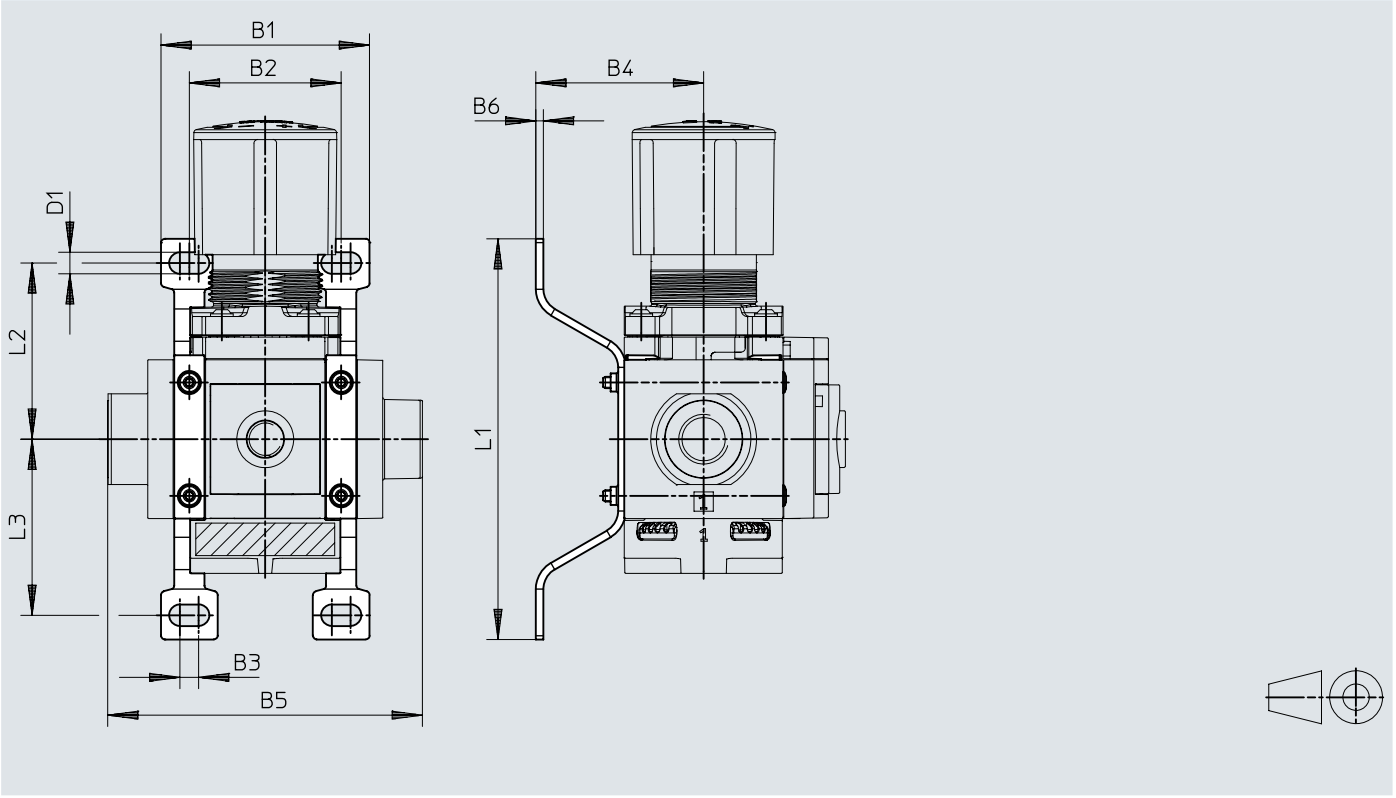

		B1	B2	B3	B4	B5	B6	D1 Ø	L1	L2	L3
MS4-LR-B	MS4-WPE-B	55,2	40,2	5	44,4	83,3	2	5,7	106	46,6	46,6
MS6-LR-B	MS6-WPE-B	79	62	4,3	53,9	114,9	2	6,5	158	71	71

Ordering data

Ordering data



Size	Pneumatic connection, port 1	Pressure gauge (ANALOG) or Pressure display (DIGITAL)	Product weight	Part no.	Type
2	M5	Prepared for G1/8	30.8 g	8086637	MS2-LR-M5-D6-A8-B
		With pressure gauge	38.6 g	8086628	MS2-LR-M5-D6-AR-BAR-B
				8086636	MS2-LR-M5-D6-AR-MPA-B
	QS-6	Prepared for G1/8	28.3 g	8086640	MS2-LR-QS6-D6-A8-B
		With pressure gauge	36.1 g	8086638	MS2-LR-QS6-D6-AR-BAR-B
				8086639	MS2-LR-QS6-D6-AR-MPA-B
4	G1/4	Prepared for G1/8	163 g	8099360	MS4-LR-1/4-D6-A8-B
		With pressure gauge	165 g	8099359	MS4-LR-1/4-D6-AG-MPA-B
				8099358	MS4-LR-1/4-D6-AG-BAR-B
6	G1/2	Prepared for G1/8	479 g	8099203	MS6-LR-1/2-D6-A8-B
		With pressure gauge	482 g	8099205	MS6-LR-1/2-D6-AG-BAR-B
				8099204	MS6-LR-1/2-D6-AG-MPA-B

Ordering data – Products for battery production



Size	Pneumatic connection, port 1	Pressure gauge (ANALOG) or Pressure display (DIGITAL)	Product weight	Part no.	Type
2	M5	Prepared for G1/8	30.8 g	8167260	MS2-LR-M5-D6-A8-F1A-B
		With pressure gauge	38.6 g	8167259	MS2-LR-M5-D6-AR-MPA-F1A-B
				8167258	MS2-LR-M5-D6-AR-BAR-F1A-B
	QS-6	Prepared for G1/8	28.3 g	8167263	MS2-LR-QS6-D6-A8-F1A-B
		With pressure gauge	36.1 g	8167262	MS2-LR-QS6-D6-AR-MPA-F1A-B
				8167261	MS2-LR-QS6-D6-AR-BAR-F1A-B
4	G1/4	Prepared for G1/8	163 g	8175243	MS4-LR-1/4-D6-A8-F1A-B
		With pressure gauge	165 g	8175241	MS4-LR-1/4-D6-AG-BAR-F1A-B
				8175242	MS4-LR-1/4-D6-AG-MPA-F1A-B
6	G1/2	Prepared for G1/8	479 g	8175352	MS6-LR-1/2-D6-A8-F1A-B
		With pressure gauge	482 g	8175354	MS6-LR-1/2-D6-AG-BAR-F1A-B
				8175353	MS6-LR-1/2-D6-AG-MPA-F1A-B

Ordering data

Ordering data (with pressure sensor SPAN-B)



Size	Pneumatic connection, port 1	Pressure gauge (ANALOG) or Pressure display (DIGITAL)	Product weight	Part no.	Type
4	G1/4	With pressure sensor with LCD display	233 g	**8236703**	**MS4-LR-1/4-D6-AD13-B**
6	G1/2		549 g	**8236712**	**MS6-LR-1/2-D6-AD13-B**

Peripherals

Peripherals overview – Size 2

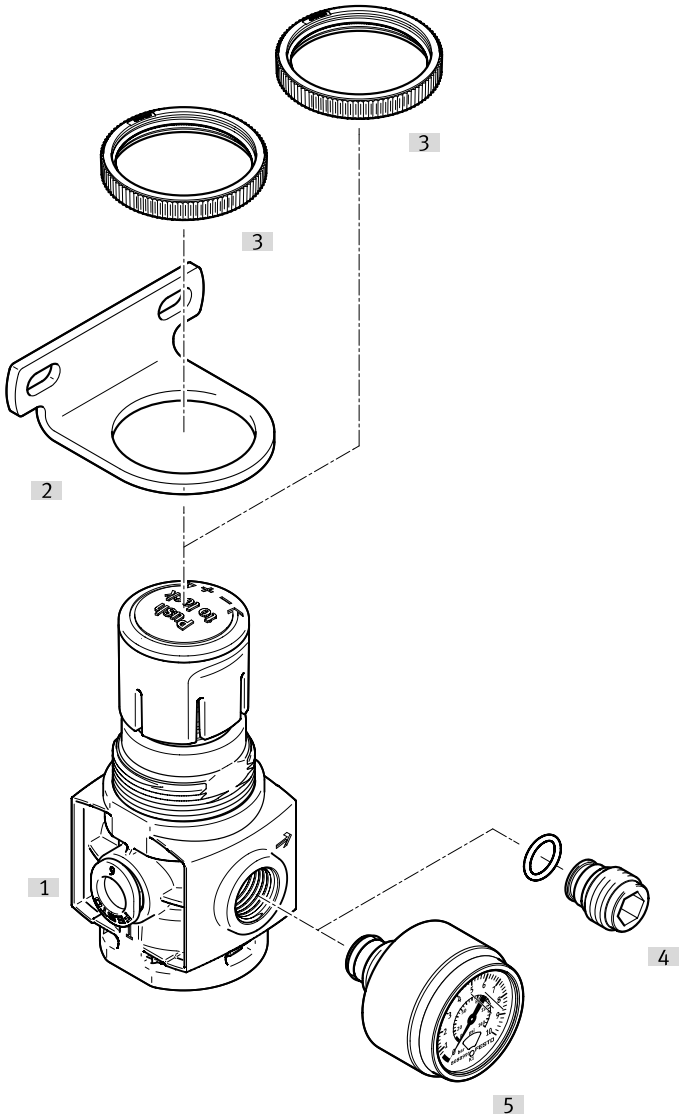

Accessories			→ Link
	Type/order code	Description	
[1]	Pressure regulator MS2-LR-...-B		ms-lr-b
[2]	Mounting bracket MS2-WR-B	For wall mounting, knurled nut included in the scope of delivery	23
[3]	Nut MS2-WRS	For front panel mounting	23
[4]	Plug screw MS2-G18S		24
[5]	Pressure gauge PAGN		23

Peripherals

Peripherals overview – sizes 4 and 6

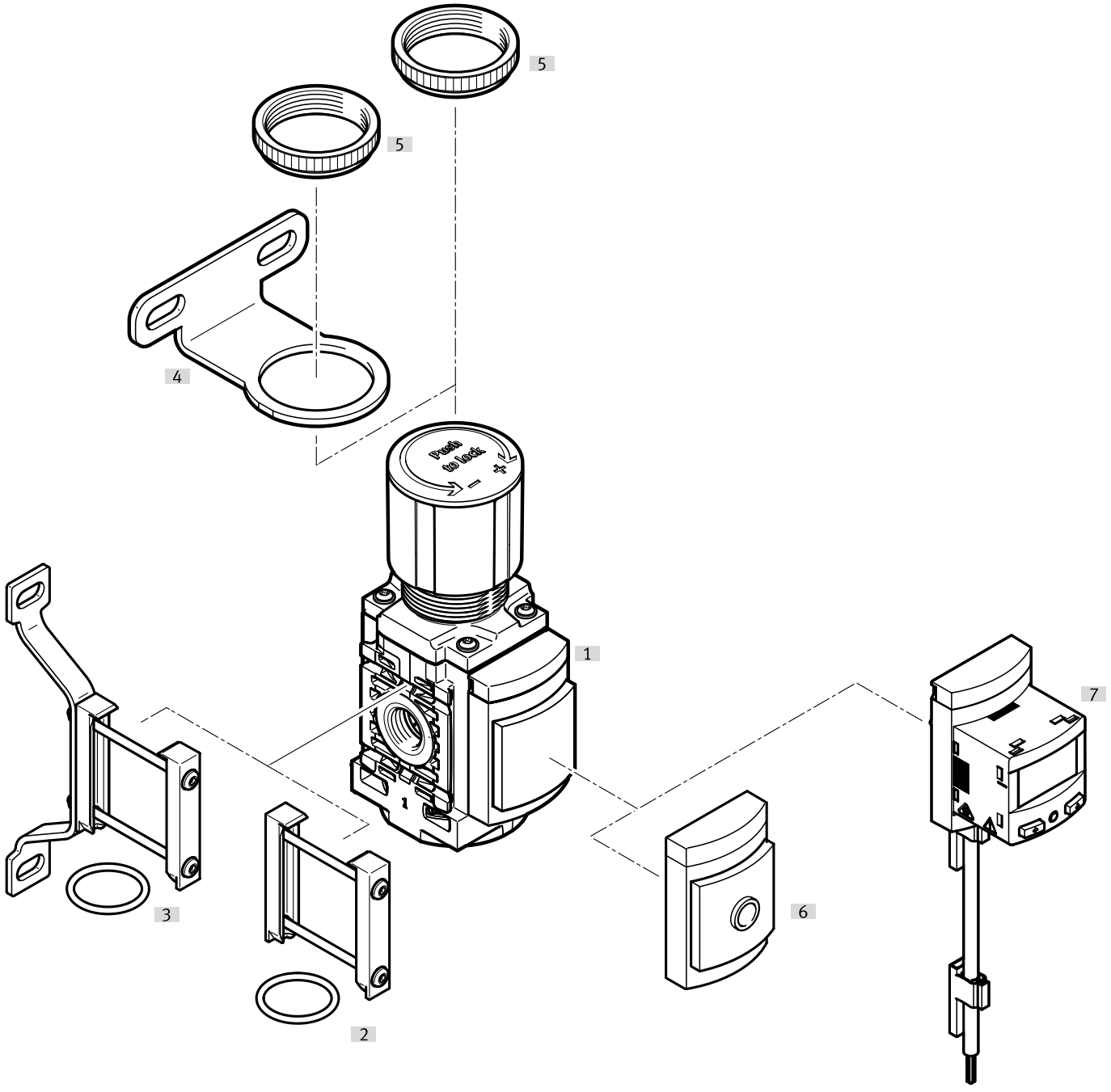

Accessories			→ Link
	Type/order code	Description	
[1]	Pressure regulator MS4/6-LR-...-B		ms-lr-b
[2]	Module connector MS...-MV1	For connecting the modules	23
[3]	Wall mounting kit MS...-WPE-B	For connecting the modules for wall mounting	23
[4]	Mounting bracket MS...-WR-B	For wall mounting, knurled nut included in the scope of delivery	23
[5]	Nut MS...-WRS	For front panel mounting	23
[6]	Adapter for EN pressure gauge 1/8		ms-lr-b
[7]	Pressure sensor SPAN-B		24

Accessories

Pressure gauge PAGN



Nominal size of pressure gauge	Indicating range	Indicating range	Product weight	Part no.	Type
26		0 ... 10 bar	8 g	8088985	PAGN-26-10-G18S
	0 ... 1 MPa			8088986	PAGN-26-1M-G18S

Mounting bracket MS...-WR-B



Size	Product weight	Part no.	Type
	13.8 g	8087978	MS2-WR-B
	14.6 g	8167322	MS2-WR-F1A-B
4	49 g	8149680	MS4-WR-B
		8176693	MS4-WR-F1A-B
6	90 g	8176696	MS6-WR-F1A-B
		8149681	MS6-WR-B

Wall mounting kit MS...-WPE-B



Size	Product weight	Part no.	Type
4	30 g	8118600	MS4-WPE-B
6	58 g	8118599	MS6-WPE-B

Nut MS...-WRS



Size	Product weight	Part no.	Type
	0.7 g	8098037	MS2-WRS
4	6.9 g	532187	MS4-WRS
6	20.9 g	532188	MS6-WRS

Module connector MS...-MV1



Size	Product weight	Part no.	Type
4	13 g	8119201	MS4-MV1
	36 g	8176695	MS4-MV1-F1A
6	33 g	8119204	MS6-MV1
	54 g	8176697	MS6-MV1-F1A

Accessories

Plug screw MS2-G18S



Short type code	Product weight	Part no.	Type
MS2-G18S	4.6 g	**8095766**	**MS2-G18S**

Pressure sensor SPAN-B

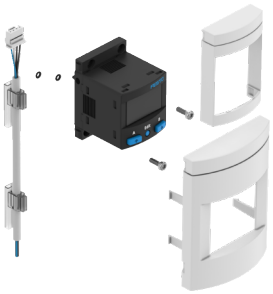

Measurement method	Switching element function	Operational voltage range DC	Product weight	Part no.	Type
Piezoresistive pressure sensor	NC or NO, switchable	15 ... 30 V	105 g	**8218111**	**SPAN-B-B11R-MS-PN-L1**