Soft-start valve MS-EDE-B



Characteristics

At a glance

- Very compact and extremely lightweight series for use close to the process directly in the machine.
- Grid dimension: 40 mm; 62 mm
- With solenoid coil, without plug socket
- Supply voltage: 24 VDC

Diagrams

Link ms-ede-b

Function

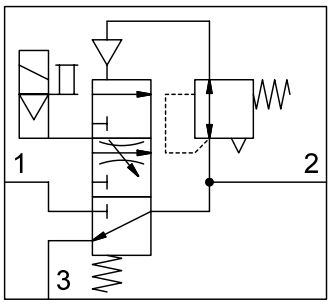

Electrically operated soft-start valve for slowly pressurising and exhausting pneumatic systems.

- The drives move slowly and safely to the initial position
- Sudden and unpredictable movements are avoided
- Adjustable switching time delay
- Detenting and non-detenting manual override

Pneumatic connection

Individual fittings that are fastened via a female thread

Pressure gauge alternatives

[_]	None

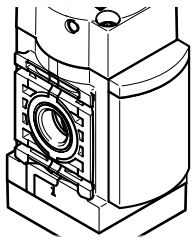

Without pressure gauge

[AD7]	Pressure sensor with switching display, M8 plug, threshold value comparator, PNP, N/O

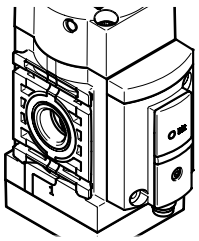

The optional pressure sensor SDE5 provides immediate information about the current pressure and is just as impressive for detecting compressed air, regulation and vacuum as it is for detecting objects. It can be used wherever simple sensing of the applied pressure is required.

Characteristics

[AD13]	Pressure sensor (SPAN-B) with LCD display, cable 2.5 m OE, 4-pin, PNP, NPN

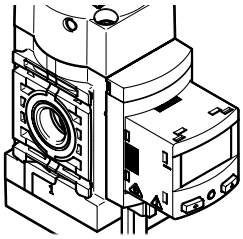

The optional pressure sensor SPAN-B is suitable for monitoring compressed air and non-corrosive gases. The measuring method is based on a piezoresistive measuring cell for relative pressure measurement. The pressure value is transmitted to the connected controller as a switching signal, as an analogue signal or via IO-Link® depending on the sensor variant and selected parameters.

Version

[B]	Second generation

Basic component with sturdy and lightweight polymer housing. Fully compatible with the MS series.

Type code

001	Series	
MS	MS series	

002	Size	
4	Grid dimension 40 mm	
6	Grid dimension 62 mm	

003	Function	
EDE	Soft-start valve, electrically actuated	

004	Pneumatic connection	
1/4	Female thread G1/4	
1/2	Female thread G1/2	

005	Supply voltage	
V24	24 V DC (connection pattern to EN 175301)	

006	Special material properties	
	None	
F1A	Recommended for production plants for manufacturing lithium-ion batteries, F1A	

007	Pressure gauge alternatives	
AD7	Pressure sensor with switching display, M8 plug, threshold value comparator, PNP, N/O	
AD13	Pressure sensor (SPAN-B) with LCD display, cable 2.5 m OE, 4-pin, PNP, NPN	

008	Version	
B	Second generation	

Datasheet

General technical data		
Size	4	6
Grid dimension	40 mm	62 mm
Pneumatic connection, port 1	G1/4	G1/2
Pneumatic connection, port 2	G1/4	G1/2
Pneumatic connection, port 3	G1/4	G1/2
Design	Poppet valve, electrically actuated	
lap	Underlap	
Type of mounting	Via wall/surface bracket	
Mounting position	Any	
Valve function	3/2-way, single solenoid, closed	
Exhaust-air function	Cannot be throttled	
Manual override	Detenting, Non-detenting	
Type of actuation	Electrical	
Type of reset	Mechanical spring	
Type of piloting	Piloted	
Pilot air supply	Internal	
Signal status display	With accessories	
Selection of additional functions	With silencer	

Electrical data	
Characteristic coil data	24 V DC: 2.3 W
Permissible voltage fluctuations	+/-10%
Electrical connection	Type C, To EN 175301-803
Degree of protection	IP40, IP65
Switch-on time	31 ms

Flow characteristics		
Size	4	6
Pneumatic connection, port 1	G1/4	G1/2
Standard nominal flow rate (standardised to DIN 1343)[1)]	2,000 l/min	5,000 l/min
Standard nominal flow rate, exhaust 0.6->0 MPa (6->0 bar, 87->0 psi)	1,600 l/min	4,000 l/min
C value	8.52 l/sbar	23.9 l/sbar
b value	0.45	0.46

1) Measured at p1 = 6 bar and p2 = 5 bar, Δp = 1 bar.

Operating and environmental conditions	
Operating pressure	0.3 ... 0.7 MPa
Operating pressure	3 ... 7 bar
Operating pressure	43.5 ... 101.5 psi
Operating medium	Compressed air to ISO 8573-1:2010 [7:4:4]
Note on operating and pilot medium	Lubricated operation possible (in which case lubricated operation will always be required)
Storage temperature	-10 ... 60°C
Ambient temperature [1)]	-5 ... 50°C
Media temperature [2)]	-5 ... 50°C
Corrosion resistance class CRC [3)]	1 - Low corrosion stress

1) With pressure sensor: 0... 50 °C

2) With pressure sensor: 0... 50 °C

3) More information www.festo.com/x/topic/kbk

Datasheet

Materials	
Material housing	Reinforced PA
Material seals	HNBR, NBR
Note on materials	RoHS compliant
LABS (PWIS) conformity	VDMA24364-B1/B2-L
Cleanroom suitability, measured according to ISO 14644-14	Class 7 according to ISO 14644-1

Additional material specifications – products for battery production (MS...-F1A-B)	
Suitability for the production of Li-ion batteries	Suitable for battery production with reduced Cu/Zn/Ni values (F1a)

Flow rate qn as a function of flow control screw turns n, measured: P1 against ambient pressure (MS4-EDE-B)

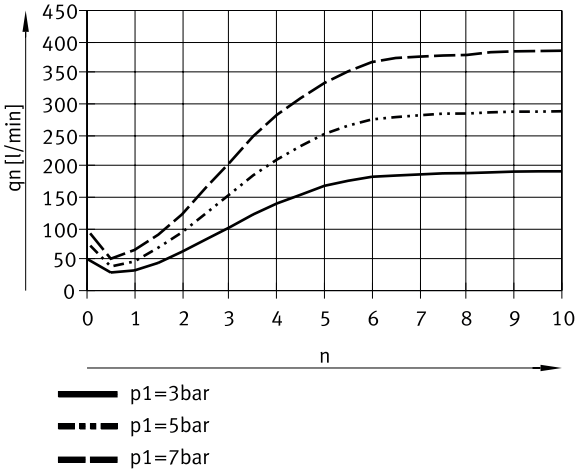

Flow rate qn as a function of flow control screw turns n, measured: P1 against ambient pressure (MS6-EDE-B)

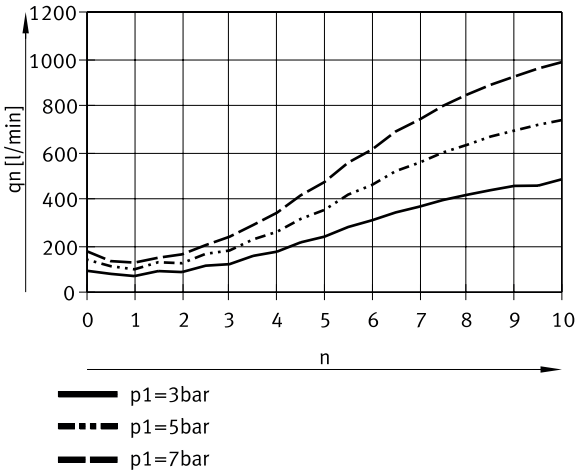

Datasheet

Pressure p as a function of time t (switching pressure)

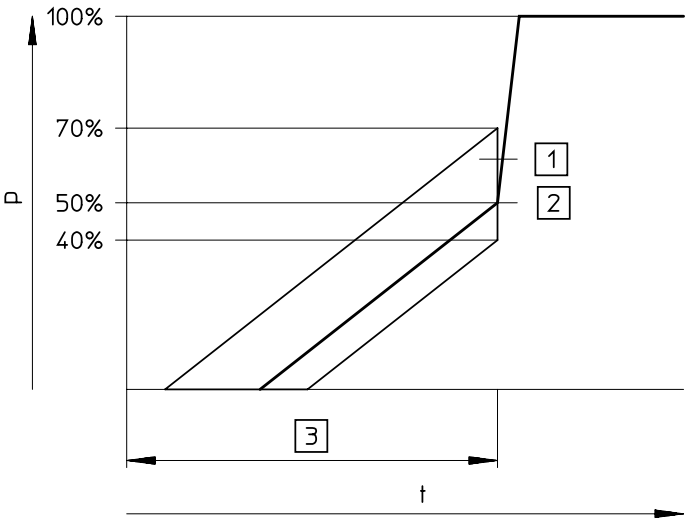

[1] Tolerance range
[2] Switching point
[3] Filling time adjustable via flow control

The +20%/–10% switching pressure tolerance refers to the operating pressure p1.
Example: a switching pressure from 1.6 bar to 2.8 bar is permissible at an operating pressure of 4 bar.

Manual override

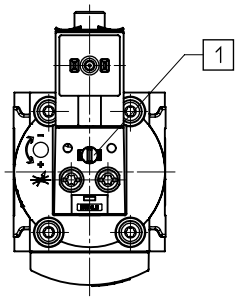

[1] Detenting and non-detenting manual override

Dimensions

Dimensions – Basic version Download CAD data www.festo.com

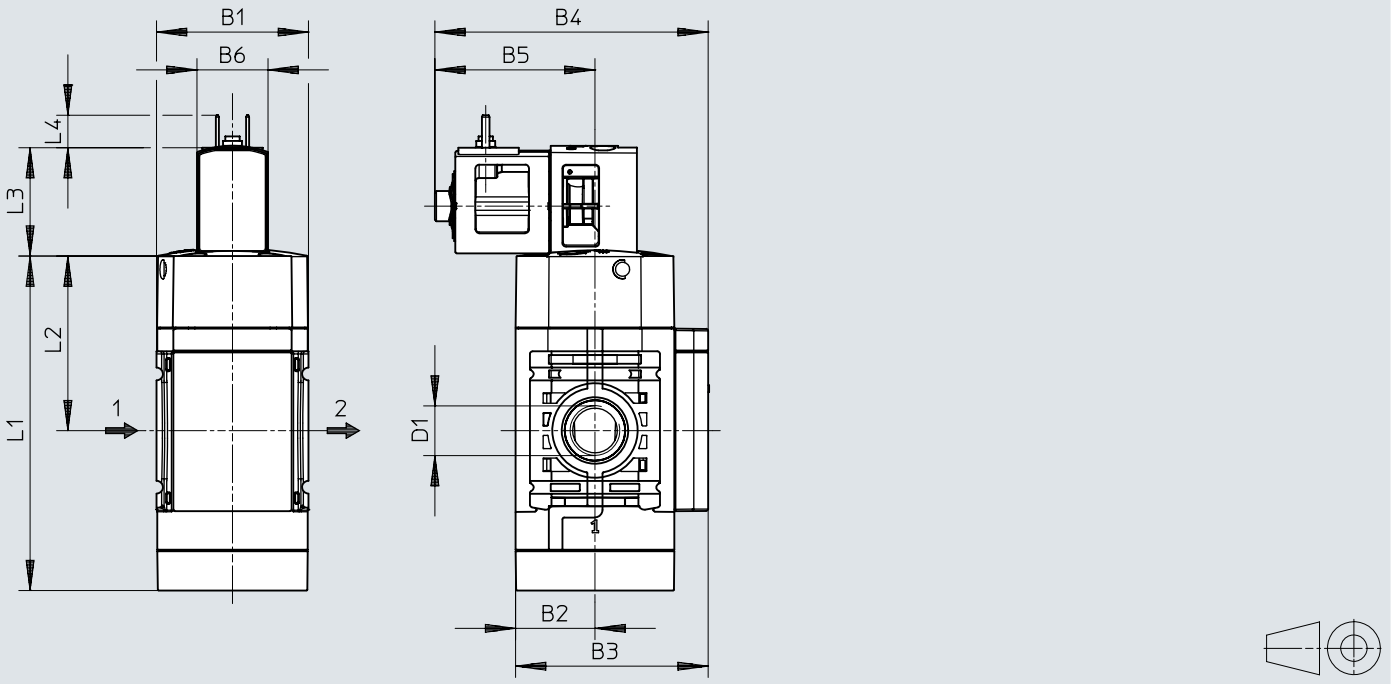

	B1	B2	B3	B4	B5	B6	D1	L1	L2	L3	L4
MS4-EE-...-B	40,2	21	50,9	72,3	42,4	18,8	G1/4	88,5	46,2	28,7	8,6
MS6-EE-...-B	62	31	76	87,7	42,7	18,8	G1/2	140	75,5	28,2	8,6

Dimensions

Dimensions – With pressure sensor SDE5 Download CAD data www.festo.com

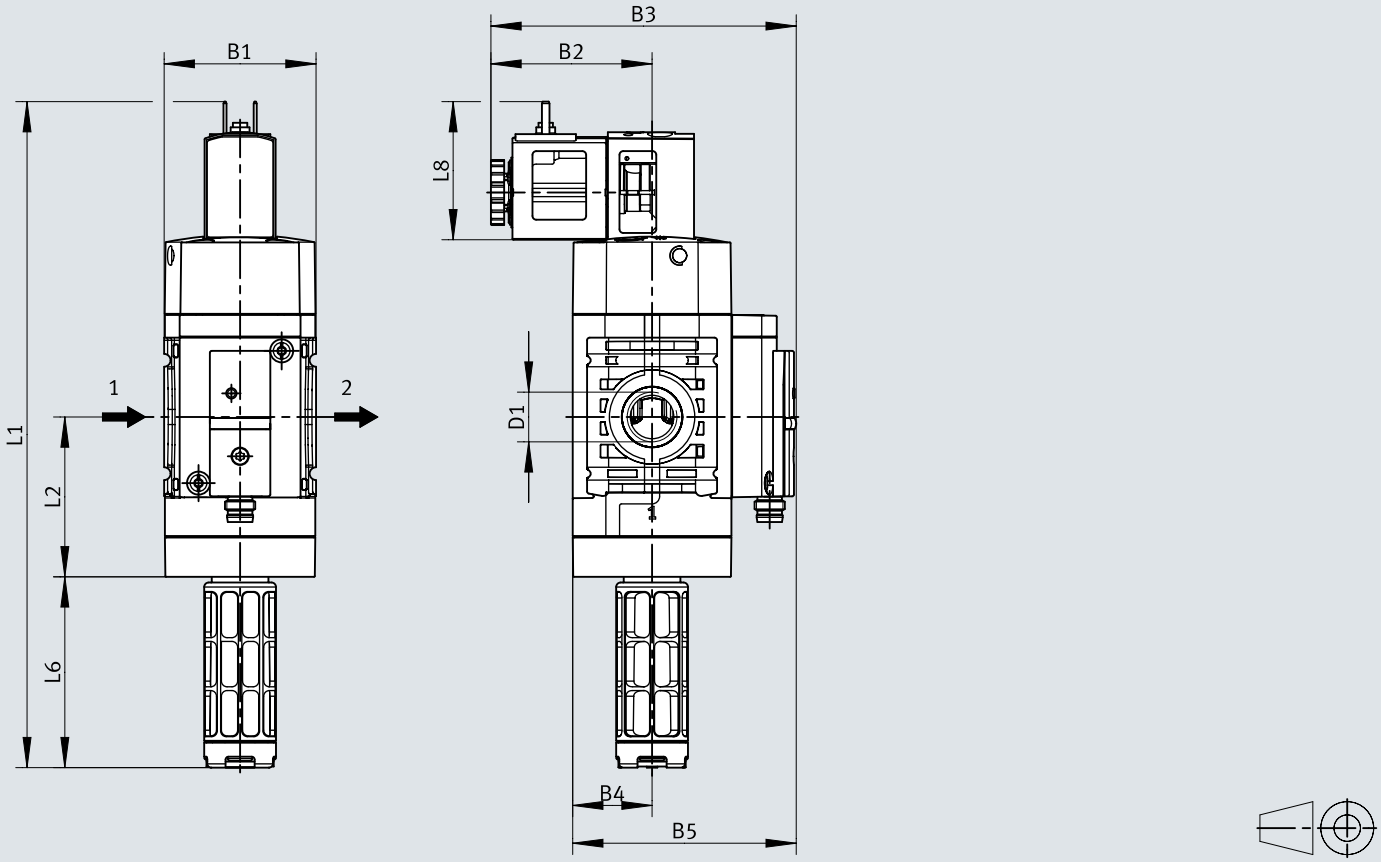

	B1	B2	B3	B4	B5	D1	L1	L2	L6	L8
MS4-EE-1/4-V24-SP-AD7-B	40,2	~42,7	~80,8	21	~59,2	G1/4	~176,3	42,3	50,5	~36,6
MS6-EE-1/2-V24-SP-AD7-B	62	~43	~ 91,3	31	79,3	G1/2	~256,2	64,5	79,4	~36,8

Dimensions

Dimensions – With pressure sensor SPAN-B Download CAD data www.festo.com

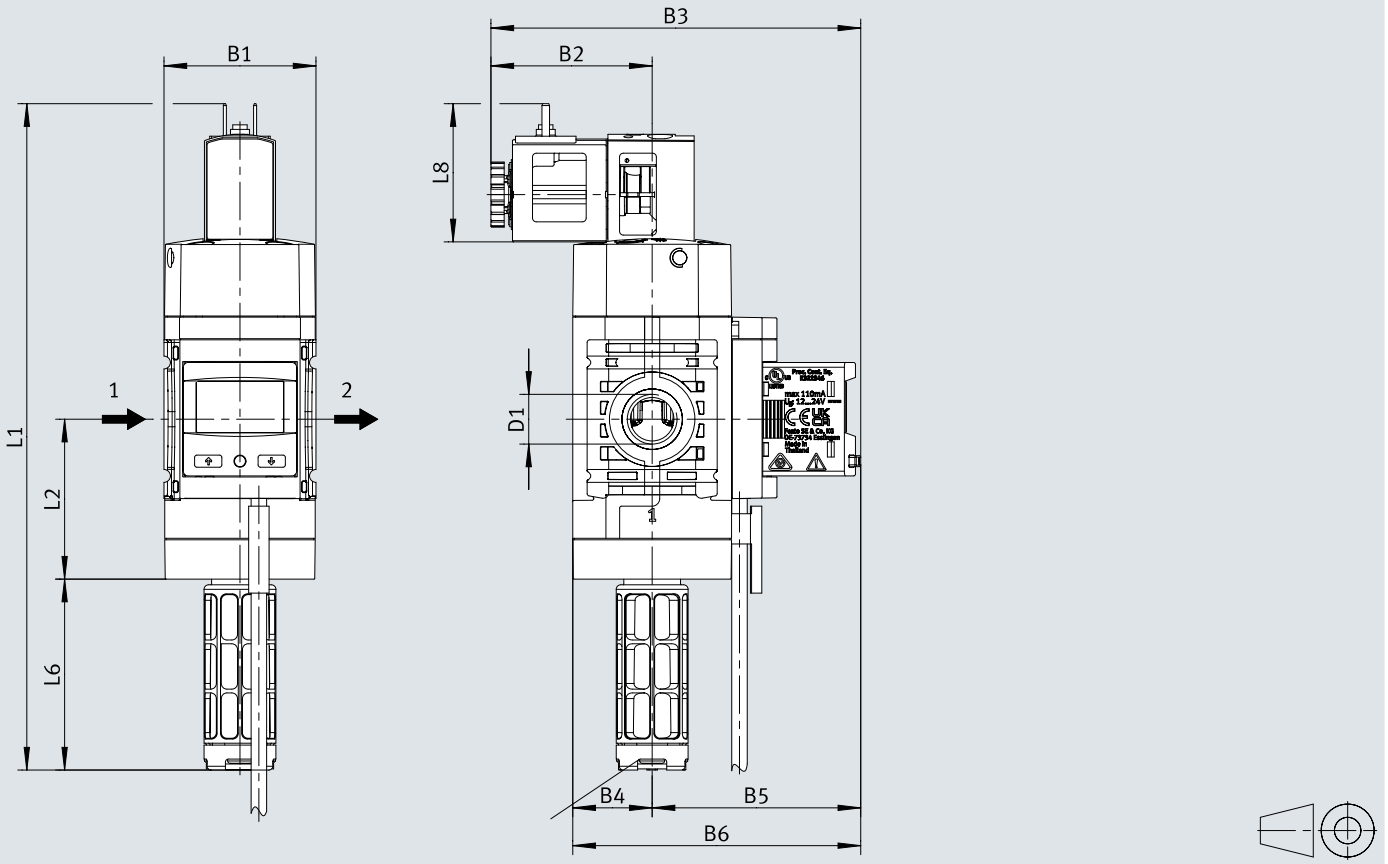

	B1	B2	B3	B4	B5	B6	D1	L1	L2	L6	L8
MS4-EDE-1/4-V24-AD13-B	40,2	42,7	~97,9	21	~55,2	~76,2	G1/4	~176,1	42,3	50,5	~36,6
MS6-EDE-1/2-V24-AD13-B	62	43	~ 108,3	31	~65,3	~96,3	G1/2	~258,2	64,5	79,4	~38,6

Dimensions

Dimensions – Silencer (accessory) Download CAD data www.festo.com

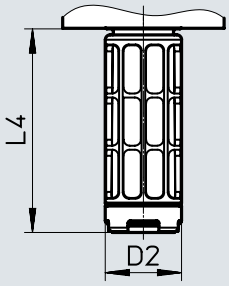

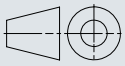

	D2 ø	L4
U-1/4	20	55
U-1/2	28	108

Dimensions

Dimensions – Wall mounting kit MS...-WPE-B (accessories) Download CAD data www.festo.com

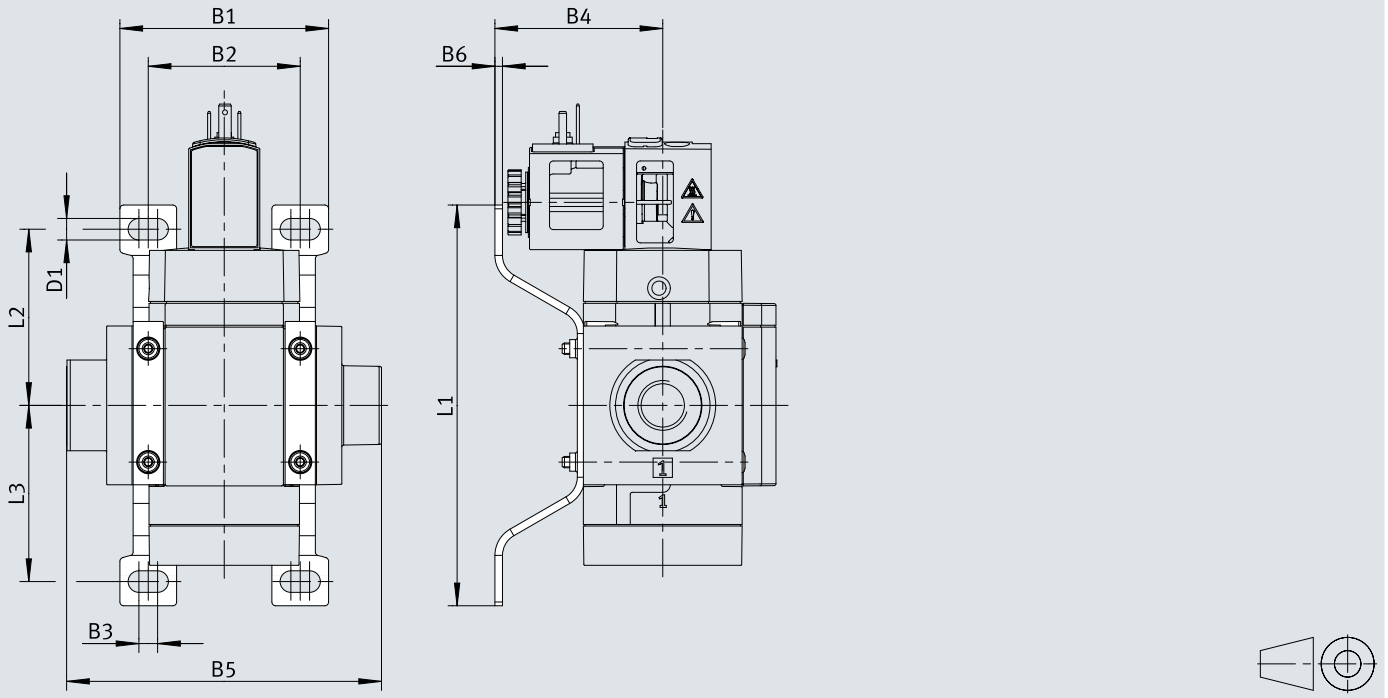

	B1	B2	B3	B4	B5	B6	D1 ø	L1	L2	L3
MS4-WPE-B	55,2	40,2	5	44,4	83,3	2	5,7	106	46,6	46,6
MS6-WPE-B	79	62	4,3	53,9	114,9	2	6,5	158	71	71

Ordering data

Ordering data



Size	Pneumatic connection, port 1	Product weight	Part no.	Type
4	G1/4	196 g	**8080815**	**MS4-EDE-1/4-V24-B**
6	G1/2	499 g	**8080855**	**MS6-EDE-1/2-V24-B**

Ordering data



Size	Pneumatic connection, port 1	Pressure gauge (ANALOG) or Pressure display (DIGITAL)	Product weight	Part no.	Type
4	G1/4	With pressure sensor with operational status indicator	196 g	**8201356**	**MS4-EDE-1/4-V24-AD7-B**
6	G1/2		499 g	**8201358**	**MS6-EDE-1/2-V24-AD7-B**

Ordering data – pressure sensor with LCD display



Size	Pneumatic connection, port 1	Product weight	Part no.	Type
4	G1/4	196 g	**8236747**	**MS4-EDE-1/4-V24-AD13-B**
6	G1/2	499 g	**8236749**	**MS6-EDE-1/4-V24-AD13-B**

Ordering data – Products for battery production



Size	Pneumatic connection, port 1	Product weight	Part no.	Type
4	G1/4	196 g	**8176511**	**MS4-EDE-1/4-V24-F1A-B**
6	G1/2	499 g	**8176513**	**MS6-EDE-1/2-V24-F1A-B**

Peripherals

Peripherals overview

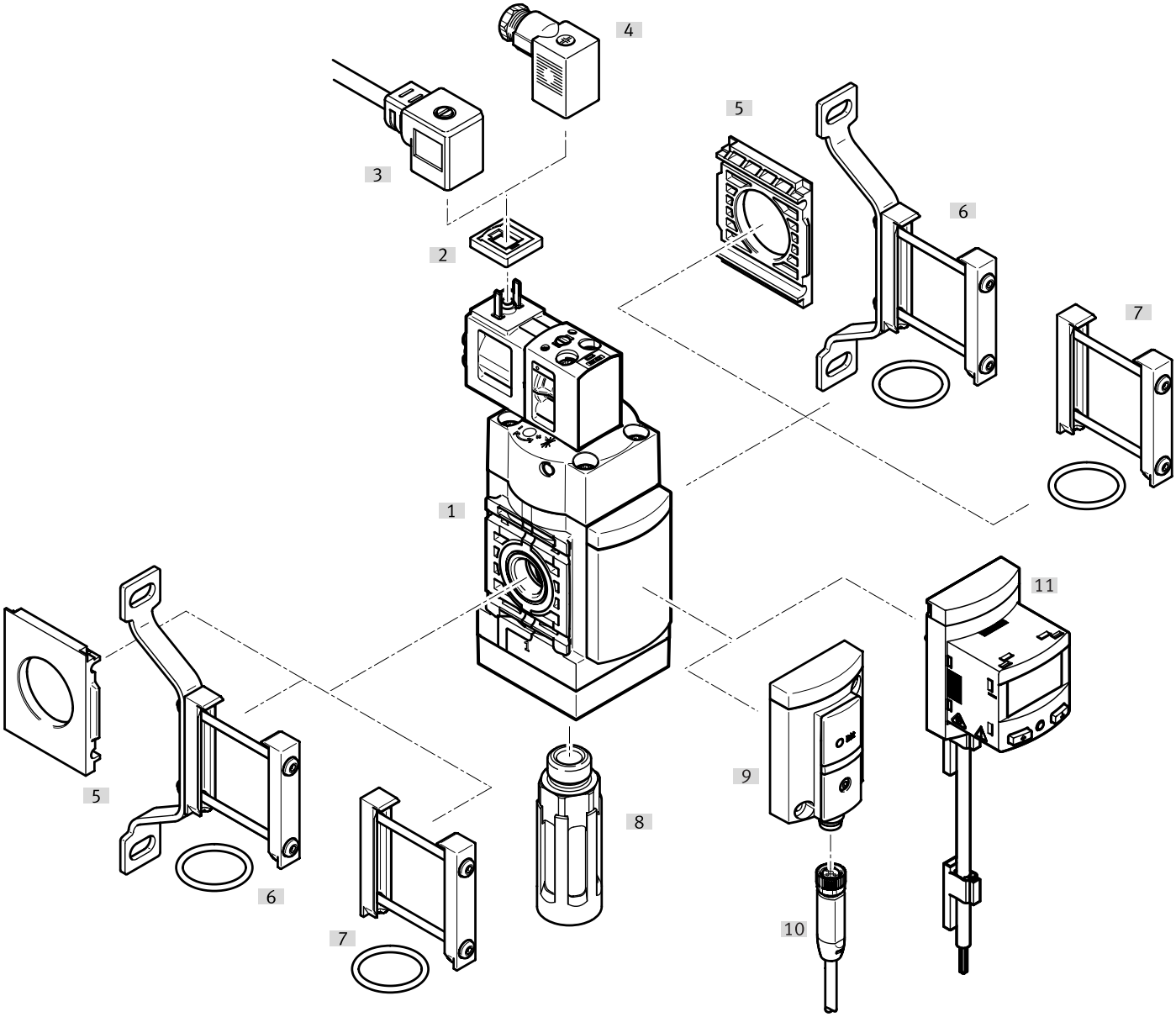

Accessories			→ Link
	Type/order code	Description	
[1]	On/off valve MS-EDE-B		ms-ede-b
[2]	Illuminating seal MEB-LD		15
[3]	Plug socket with cable KMEB		16
[4]	Plug socket MSSD-EB	For on/off valve MS...-V24P and MS...-V24-...-EX2, the plug socket is included in the scope of delivery.	15
[5]	Mounting plate MS...-AEND	Module connector MS4/6-MV [2] or mounting bracket MS4-WP, WPB, WPE, WPM [3] is required for mounting.	15
[6]	Wall mounting kit MS...-WPE-B	Without illustration	15
[7]	Module connector MS...-MV1		15
[8]	Silencer U		16
[9]	Pressure sensor SDE5		sde5
[10]	Connecting cable NEBA-M8...-LE3		16
[11]	Pressure sensor SPAN-B		16

Accessories

Module connector MS...-MV1



Size	Suitability for the production of Li-ion batteries [1]	Product weight	Part no.	Type
4		13 g	**8119201**	**MS4-MV1**
	F1a	36 g	**8176695**	**MS4-MV1-F1A**
6		33 g	**8119204**	**MS6-MV1**
	F1a	54 g	**8176697**	**MS6-MV1-F1A**

1) More information www.festo.com/x/topic/bat

Wall mounting kit MS...-WPE-B



Size	Product weight	Part no.	Type
4	30 g	**8118600**	**MS4-WPE-B**
6	58 g	**8118599**	**MS6-WPE-B**

Mounting plate MS...-AEND



Size	Product weight	Part no.	Type
4	4 g	**542966**	**MS4-AEND**
6	11.1 g	**535408**	**MS6-AEND1**

Plug socket MSSD-EB



Electrical connection	Type of mounting	Product weight	Part no.	Type
3-pin, Socket, Angled socket, Type C, To DIN EN 175301-803, To DIN EN 61984, Square design MSEB, Square design MSN2	On solenoid valve via M2.5 central screw	11 g	**151687**	**MSSD-EB**

Illuminating seal MEB-LD



Operational voltage range DC	Switching position indicator	Product weight	Part no.	Type
12 ... 24 V	LED	0.6 g	**151717**	**MEB-LD-12-24DC**

Accessories

Silencer U



Pneumatic connection	Flow rate to atmosphere	Sound pressure level	Product weight	Part no.	Type
G1/4	3,300 l/min	76 dB(A)	7.7 g	**2316**	**U-1/4**
G1/2	10,300 l/min	82 dB(A)	58.2 g	**2310**	**U-1/2**

Plug socket with cable KMEB



Nominal operating voltage DC	Electrical connection 2, number of connections/ cores	Signal status display	Cable length	Part no.	Type
24 V	2		2.5 m	**547270**	**KMEB-3-24-2.5**
			5 m	**547271**	**KMEB-3-24-5**
		Yellow LED	2.5 m	**547268**	**KMEB-3-24-2.5-LED**
			5 m	**547269**	**KMEB-3-24-5-LED**
	3		2.5 m	**151688**	**KMEB-1-24-2.5-LED**
			5 m	**151689**	**KMEB-1-24-5-LED**
			10 m	**193457**	**KMEB-1-24-10-LED**

Connecting cable NEBA-M8

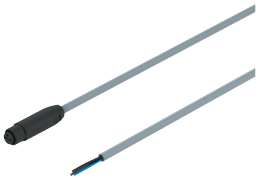

Electrical connection 1, connector system	Electrical connection 1, number of connections/ cores	Electrical connection 1, cable outlet	Cable length	Part no.	Type
M8x1, A-coded, to EN 61076-2-104	3	Straight	2.5 m	**8078223**	**NEBA-M8G3-U-2.5-N-LE3**
			5 m	**8078224**	**NEBA-M8G3-U-5-N-LE3**
		Angled	2.5 m	**8078230**	**NEBA-M8W3-U-2.5-N-LE3**
			5 m	**8078231**	**NEBA-M8W3-U-5-N-LE3**

Pressure sensor SPAN-B

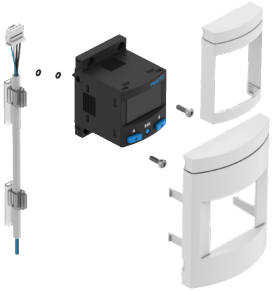

Measurement method	Switching element function	Operational voltage range DC	Product weight	Part no.	Type
Piezoresistive pressure sensor	NC or NO, switchable	15 ... 30 V	105 g	**8218111**	**SPAN-B-B11R-MS-PN-L1**